ELECTRIC DL285 Wheelloader

Weight	18,8 tons
Bucket capacity	2.800 litre
Nominal power	140 kW
Battery capacity	400 kWh



The electric wheelloader that amazes you

ELECTRIC

DL285

Reduce your footprint with the newest DL285 Electric. This wheelloader is exceptional in terms of power and productivity, and completely emission-free. Let yourself be amazed!



Top performances and capacity

The ability to be more productive

The PM (Permanent Magnet) electric motor is specially developed for this electric wheelloader and delivers high torque at a high efficiency of 96%. The motor is maintenance-free and has a long lifespan. The nominal power is 140 kW and the maximum torque is 902 Nm.

Features and benefits

- Extremely compact and robust structure
- Highest efficiency (over the entire operating range) on the market
- Up to IP67 enclosure class
- Liquid cooled



Strength and intelligence

The electric wheelloader is a machine with many qualities. Here are some of its notable features of intelligence listed below.

Boost your productivity

- Drive control, with 5 gears for maximum power transmission
- Adjustable load suspension system on the loading frame
- Automatic leveling function
- End-stop damping for smooth loading movement

All-in

An easy-to-read and use 8” touchscreen integrates all functions in one place. Visibility of all information about the machine, settings, rearview camera and multimedia.

Maximum safety

- Rearview camera
- Handrails for safe maintenance
- Up to 12 LED working lights available
- Rearview mirrors with electric adjustment capability
- 3-point safety belt

Operator comfort

The new spacious cabin is user-friendly and offers excellent visibility all around. The comfortable seat with a 3-point safety belt ensures maximum safety for the operator. The joystick has been completely redesigned and integrated into the right armrest of the seat. The mirrors are electrically adjustable and contribute to good visibility for the operator.

Uptime

The uptime of the electric DL285 is eight hours, based on results during practical tests.*

**Subject to conditions and environment.*

Maintenance free

By choosing high-end electrical components, less maintenance is required for the machine. The maintenance is more specialized, therefore we recommend a maintenance contract so that you can work worry-free.





Improve Visibility and Productivity

The Standard Transparent Bucket option offers a supplemental view from a monitor inside the cab. With an unobstructed view in front of the wheel loader bucket, operators can see objects or challenging terrain, enabling them to be more efficient and productive in their work.

Allround powerful workhorse

The electric wheelloader is a true all-rounder. From road building work to material handling, truck loading and all of that quietly and without harmful emissions.

Power

The power source of the Electric DL285 wheelloader, is a maintenance-free Danfoss electric motor. The Danfoss electric motor is based on synchronous reluctance assisted permanent magnet (SRPM) technology. The motor is liquid-cooled and designed to operate in heavy-duty operating conditions. Due to its compact dimensions, the motor has a lower weight and higher efficiency compared to conventional electric motors.

Battery capacity

The available gross capacity of the fixed Powerbox 400 is 400 kWh total with an active climate control system. To achieve a superior performance with the highest electrical efficiency. The Powerbox 400 consists of LFP-modules and is equipped with a capacity meter, which is visible on the additional screen in the cabin.

Charging options

1 x type 2 AC charging connector on the machine in combination with 1 x 22kW On Board Charger.
1 x CCS Combo type 2 DC fast charge connector on the machine.

Charging time is:
3 hours and 20 minutes (120kW DC fast charge)
8 hours and 45 minutes (40kW DC charging)



Machine certification

UNECE R10 certified components.
- 2006/42/EG
- 2014/35/EU
- 2000/14/EG
- EN 474

Powerbox 400 certification

UN ECE R100.03 certified REESS system
- 2014/35/EU

Charge certification

- IEC 61851
- IEC 62196

Certification

Ingress Protection

An Ingress Protection (IP) rating is a method used to indicate the degree of protection provided by the enclosure material (or other objects). For example, an IP value indicates whether the material is resistant to the ingress of water, objects or dust. This is important to protect the mechanical equipment.

ISO 5006-standards

This international standard specifies a test method for determining and evaluating the visibility of the operator. By using cameras and mirrors, the user does not lose any overview.

Safety guaranteed

Working with electrical machines requires compliance with a lot of laws and regulations. It is hugely important to be able to guarantee health and safety guarantee for the operator, bystanders and people responsible for the maintenance of these machines. As this is a new technology in our industry we work closely with end-users, industry associations, NEN committees, and implement additional safety requirements for working with high-voltage vehicles. In order to comply with the type approval of an electric vehicle, certain safety requirements must be respected, such as UNECE R10, 2006/42/EG, UNECE R100.03 vehicle, IP65, and NEN ISO 5006-standards are examples of specific safety requirements.

UNECE R10 (EMC)

Automotive “EMC” stands for Electro Magnetic Compatibility, “R10” is a component, and “automotive” refers to the motor vehicle industry. The EMC R10 Automotive certification includes a variety of type approval tests. This includes reducing harmful electromagnetic radiation sources within the legally defined limits. This means that the system is tested for compliance with all European automotive electronics regulations.

UNECE R100.03

This standard focuses on preventing contact with high-voltage components. Our batteries also meet the even stricter requirements of the R100.03 regarding REESS (Rechargeable Energy Storage Systems) systems. While not mandatory, it adds an extra level of safety.





Batteries

Mega capacity

The electric wheelloader is equipped with a fixed battery, also known as fixed Powerbox 400. This Powerbox 400 provides a combined capacity up to 400 kWh with a nominal system voltage of 600 V. By utilizing the high-voltage system, there is less loss and greater efficiency achieved through the Powerbox 400. The fixed Powerbox 400 in the electric wheelloader is one of the most important components of the machine.

Powerbox 400

Our Powerbox 400 consist of LFP-modules, which are fully recyclable. An EoL (End of Life) declaration is issued for the Powerbox 400. In the current application, where the Powerbox 400 has a active climate control system, a lifespan of 3,000 charging cycles is provided. At that point, the Powerbox 400 still retains 80% of its original capacity, making it suitable for a second life.

Sustainability

The second life of the battery involves residential or commercial energy storage systems in combination with solar panels or wind turbines. These battery can serve as energy storage system for an additional period of ten years. After this, the battery reach the end of his life (End of Life) and can be recycled up to 100%.

Energy plan

Charging infrastructure, where do you start?

In addition to purchasing an electric machine, there is also the need for a new way of “refueling”. Charging your electric machine may seem complicated and you may not know where to start. How will you charge your machine, whether it is on the construction site or at your own company?

The power of innovation

In addition to our experience in building electric machines we have also developed our expertise in charging solutions and charging infrastructure. Therefore, we would be happy to work together with you to address your challenges and determine how we can assist you. Depending on your needs, we offer various services ranging from initial advice to complete management of your charging infrastructure.

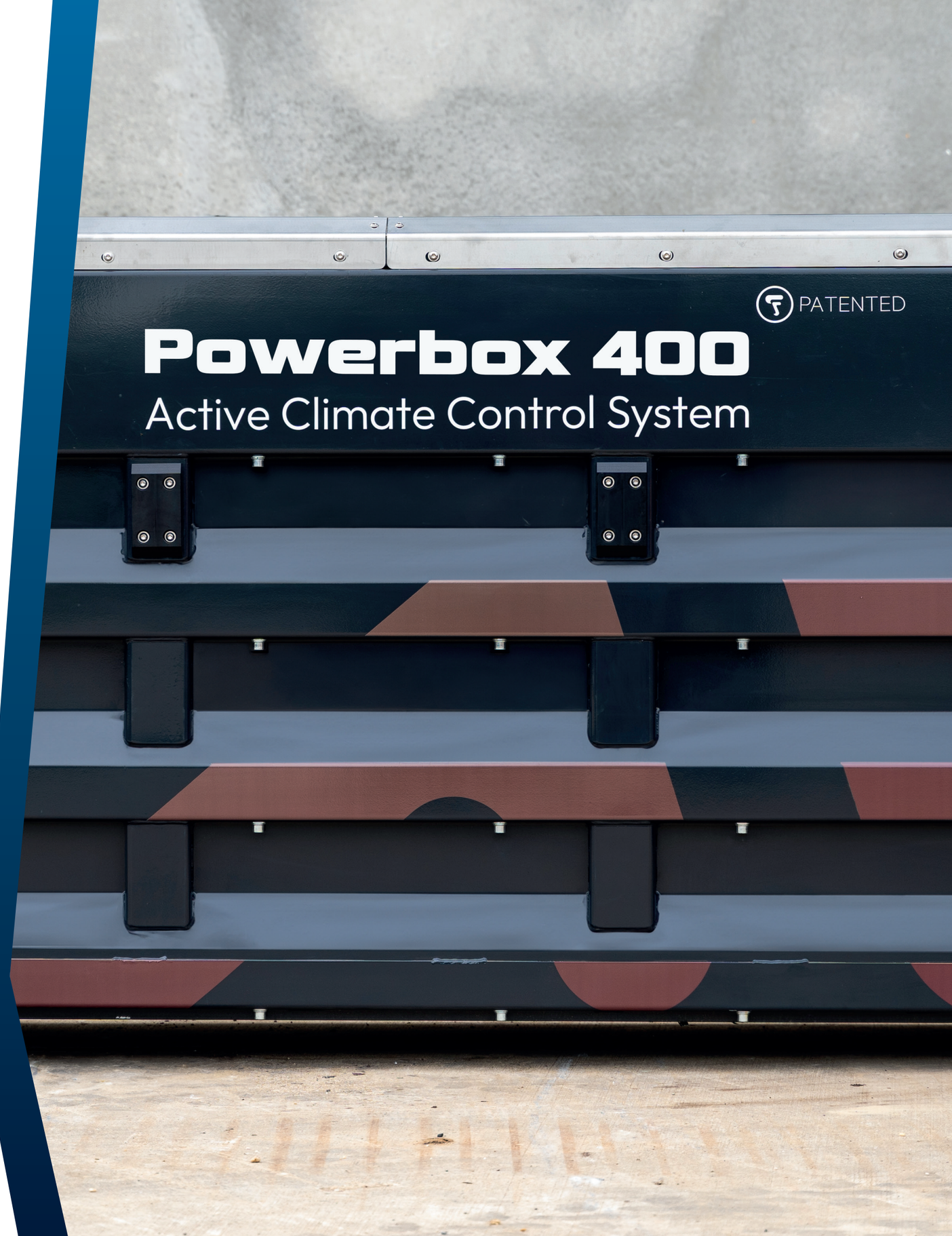

TECHNICAL SPECIFICATIONS

ELECTRIC DL285

ELECTRIC MOTOR

Danfoss SPRM Permanent Magnet motor with high constant power.

Nominal power
140 kW

Maximum torque
902 Nm

HYDRAULIC SYSTEM

Type
Load sensing - closed centre hydraulic system

Master pump
Dual axial pumps with variable stroke volume

Maximum flow
246 l/min

Maximum pressure
260 bar

EMCV
Automatic functions for positioning the bucket to start digging and a function to stop the lift arm at the desired position.

Filtration
In the oil return to the tank, the fiberglass filter has a filtration capacity of 10 microns.

AXLES

Front and rear axles manufactured by ZF with planetary reduction gears. 13.9 tons pulling force enables working on slopes of 30°.

LSD-locking ratio
Automatic differential lock

HDL-locking ratio
Engageable differential lock

Oscillation angle
+/- 12°

Tire size
20.5R25

TRANSMISSION

The electric wheelloader has a five-speed powershift transmission with a torque converter. There are three operating modes: manual, fully automatic or semi-automatic with a kick-down function. Based on high-quality components equipped with a modulation system for protection and smooth acceleration and direction changes. A manual transmission control lever is located on the left side of the steering wheel. Direction change function is also available in automatic or semi-automatic mode. The transmission can be disengaged by the brake pedal to deliver full electric power to the hydraulic system. A safety feature prevents the electric motor from starting when the transmission is not in neutral. The 5-speed transmission is equipped with a torque converter lock-up function from 2nd to 5th gear.

Type
5-speed automatic powershift with lock-up

Gears – Forward 1 / 2 / 3 / 4 / 5
6.6 / 11.7 / 17.9 / 27.8 / 40.0 km/h

Gears – Reverse 1 / 2 / 3
7.0 / 12.3 / 29.2 km/h

Maximum traction
13.9 ton

Maximum slope
30° (58%)

LIFT ARM

Z-kinematics with a simply designed lift arm system for heavy-duty applications. 120 kN breakout force combined with consistent bucket angle throughout the entire range of motion. Bucket angles are optimized in travel and ground positions. Load Isolation System (LIS) is installed as standard for improved operator comfort, higher output, and longevity.

Load cycle

Lift arm up	5.4 s
Lift arm down	3.2 s
Dump bucket	1.5 s

BRAKES

Dual multi-disc circuit with sintered metal discs for extended lifespan. Brake system type: spring-loaded/ hydraulically released. Brake pump with variable axial cylinder pistons delivers 58 l/min. Can be activated/ deactivated with the Intelligent Clutch Cut Off with the brake pedal. The emergency brakes are composed of a double system continuously under pressure by accumulators.

CABIN

The safety cabin is certified with a Roll Over Protection System (ROPS) and Falling Object Protective Structure (FOPS). Spacious modular cabin with excellent all-round visibility and ample storage space. Clear view of the bucket, tires, and loading area thanks to wide windows. Button-controlled air conditioning and heating with air recirculation function. Dual cabin air filters installed in the cabin with additional protection for the operator in dusty or polluted environments. Adjustable high-quality seat with heating, air suspension, and adjustable armrests. Height-adjustable and tilt-adjustable steering column. All operating information clearly displayed for the operator. Control functions are centralized in the right console.

Safety standard
ROPS ISO 3471:2008
FOPS ISO 3449



TECHNICAL SPECIFICATIONS

ELECTRIC DL285

BATTERY

PATENTED

Designed to deliver superior performance with the highest electrical efficiency, the Powerbox 400 fully complies with all necessary safety certifications.

Model
Powerbox 400

Gross capacity
400 kWh

Maximum Charge capacity
120 kW

Charge protocol
SPEC 70121 and ISO15118

Nominal voltage system
600 V DC

Certifications
- R100.03
- IP68

Charging options

1 x type 2 AC charging connector on the machine in combination with 1 x 22kW On Board Charger.

1 x CCS 2 combo AC and DC.

Battery type
LFP

Temperature
Active Climate Control System

Charging

Our battery technologies use “plug & charge”, the DIN SPEC 70121 and ISO15118 communication protocol for smart charging. This enables communication between vehicles and charging infrastructure and it allows smart charging and dynamic load management. This advanced process not only optimizes the battery during charging and discharging, but also minimizes network load, which is essential for efficiency and sustainability.

AC CHARGING

Charging connector
Type 2

Charge capacity
22 kW AC

Charging time (0 - 90%)
17u 30min



Type 2

DC CHARGING

Charging connector
CCS type 2 combo

Charge capacity
120 kW DC

Charging time (0 - 90%)
3u 20min



Combo CCS Type 2

Patent

The granted patent on our Powerboxes is a unique technical design that makes it possible to use the battery on the machine, but it can also be used as a “stand alone” battery. This means that the battery can be charged and discharged without a machine. The battery can serve as master and as slave and this makes it possible to charge the battery using, for example, solar panels at your own location.



TECHNICAL SPECIFICATIONS

ELECTRIC DL285

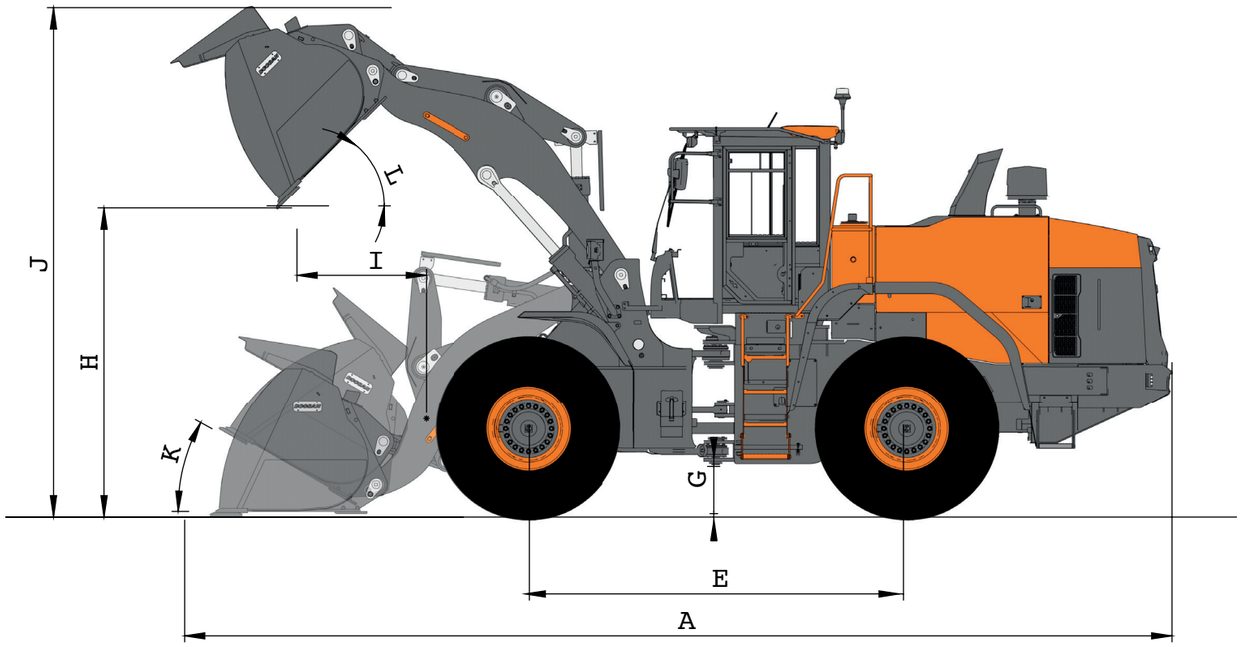

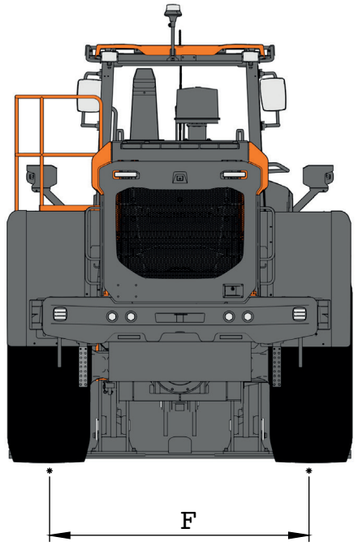

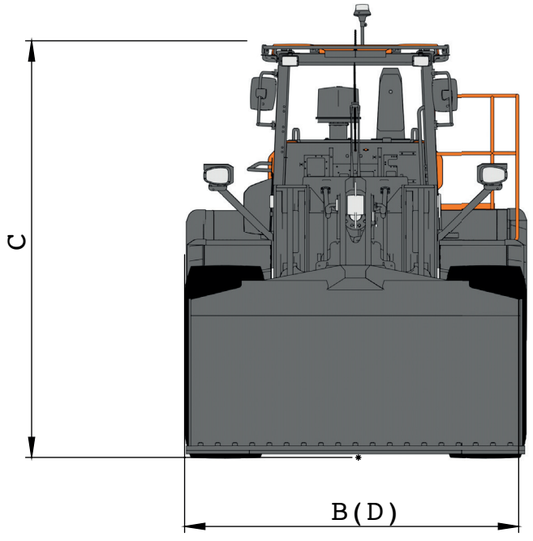

Description		Dimensions (mm)
Tire size		**20.5R25**
Bucket m³		**2.8**
A	Overall length	7832
B	Overall width	2740
C	Overall height	3495
D	Bucket width	2740
E	Wheelbase	3050
F	Tread	2040
G	Ground clearance	400
H	Dump height at 45°	2820
I	Dump reach at 45°	1160
J	Bucket hinge height	3940
K	Maximum tilt angle at carry	49°
L	Maximum dump angle at fully raised	46°
M	Maximum tilt angle at fully raised	61°



ELECTRIC DL285

Wheelloader

DISCOVER INNOVATION

ELECTRIC

Specifications and design are subject to change without notice. Images of the products in the brochure may differ from the standard version.