DEVELON

Mini Excavators

DX85R-7



Maximum power	48.5 kW
Operating weight	9528 kg
Bucket capacity	0.28 m^3


DX 85R



DEVELON DX85R-7 MINI EXCAVATOR:

MEET THE NEW GENERATION OF DEVELON MACHINES

Exceptionally powerful, yet environmentally-friendly, the DX85R-7 excavator features extraordinary fuel efficiency.

RAISE PROFITS, PRODUCTIVITY & FUEL EFFICIENCY

RELIABILITY

Reinforced castings and forged steel pivot points, and reinforced heavy-duty arm and boom to withstand high-impact materials. Mono boom or articulated boom for added versatility. Improved hydraulic line routing to protect your investment.

EFFICIENCY

The auto idle function, applied as standard, increases fuel efficiency and reduces noise level.



PRODUCTIVITY

State-of-the-art bucket, arm digging and pulling forces deliver higher productivity and reduced fuel consumption in an efficient and comfortable work environment.

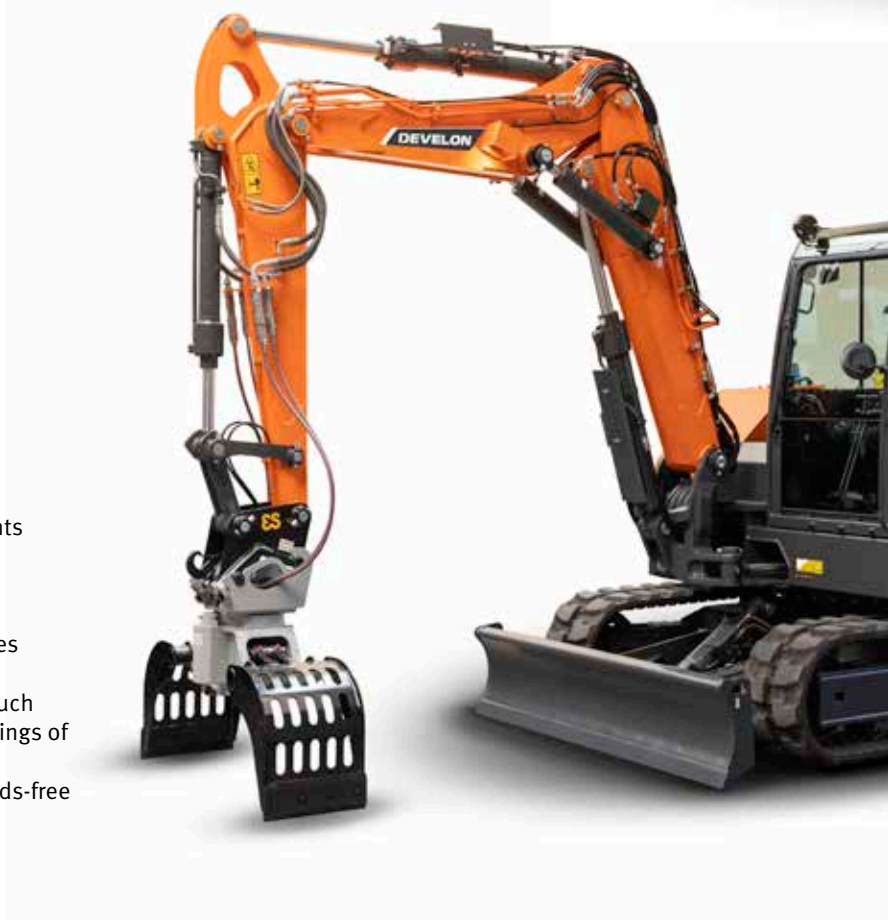

TOP PERFORMANCE IN A VERSATILE PACKAGE

- A compact & powerful machine for the best adaptability to any work site.
- High tractive effort and strong swing torque offer excellent capability for working on slopes.
- Large hydraulic capacity of a tool carrier.
- Works in narrow spaces thanks to boom swing and articulation.

CONTROLLABILITY

Smooth and precise hydraulics drive all attachments needed on the job site.

- Operator can control flow rate proportionally.
- 2 Travel speeds with automatic auto shift.
- Boom swing, controlled from the joystick, ensures powerful and stable performance.
- Easy to read and use, the new Develon Smart Touch 8" touch screen integrates all functions and settings of your machine in one place.
- Don't miss any important call, thanks to the hands-free phone system.

The new Main Control Valve reduces internal pressure loss and matches the front hydraulic flow to the work load, so that the machine can be precisely controlled in single and complex operations. This contributes to improved performance, great fuel economy, and smooth operation.



ENGINE

Exceptionally powerful – with high torque at low revs – the new Develon D24 engine, with DOC + DPF, combines reliability and low environmental impact. This Stage V compliant 3-cylinder engine delivers 48.5 kW at 2100 rpm.

UNRIVALLED COMFORT

One of the most spacious cabs in the market, with low noise & vibration levels and excellent all-round visibility. Fully adjustable suspension seat with heating functionality and improved air conditioning as standard – the DX85R-7 lets you focus on the job at hand in any situation.

SAFETY

Travel alarm, optional rear and 360° all-around view camera (AVM) provide maximum safety while working with people around. Large side mirrors and LED-type boom lamp (as standard), and additional lights (available as an option), make it easy and safe to work in dark environments.



ADVANCED FILTRATION

Highest efficiency fuel filters and cleaners remove water, dust & particles to protect your investment optimally. A filter-type high-performance water separator effectively captures moisture in the fuel, reducing impurities and helping minimize any fuel-related issues.

EASY MAINTENANCE

Maintenance data directly available from the control panel. Easy access to all filters from ground level. Cooling compartment is equipped with fine mesh for the intake air in order to protect coolers and minimize downtime.


DEVELON

ALL-ROUND VERSATILITY AND IMPROVED FUEL EFFICIENCY

A MODEL WITH NOVEL FEATURES

Developed with the concept of providing optimum value to the end-user. The DX85R-7 (reduced tail swing) hydraulic excavator offers additional value to the operator. Namely:

- Increased production and improved fuel economy achieved with an electronic control for the hydraulic system and for the engine.
- Improved ergonomics, increased comfort and excellent all-round visibility, ensuring a safe and pleasant working environment.
- High-performance materials, combined with new methods of structural stress analysis, improve reliability and increase component life expectancy, thus reducing running costs.
- Reduced maintenance increases the excavator's availability and lowers the operating costs.

GUARANTEED HIGHEST PERFORMANCE IN ANY WORK ENVIRONMENT

The advanced hydraulic system, combined with the powerful engine, provides the biggest digging and tractive forces for efficient operation. As a result, the DX85R-7 provides outstanding performance, work efficiency and the ability to adapt to any work environment.

DEVELON D24 ENGINE

The DX85R-7 has a powerful and eco-friendly heart, always providing high operating efficiency and pleasant working conditions. Thanks to the turbo charger, the engine output and torque power are much stronger. This engine is also well-known for excellent fuel efficiency and reliability with long service life.

BOOM SWING

The boom swing function allows you to work in very narrow areas.

POWERFUL DIGGING FORCE (BUCKET)

With its power, efficiency, and increased digging force, this machine can handle every job site condition.

DOZER BLADE

Welded, unitized blade provides durability even under harsh working conditions.

2ND SPEED AND AUTO SHIFT

The travel motors automatically return to high speed after downshifting under load. This allows smoother turns and easier dozing work.

RELIABILITY

Reinforced castings, forged steel pivot points, and reinforced heavy-duty arm and boom withstand high-impact materials. Large, robust boom and arm cylinders for smooth, powerful operation. Advanced pin & bushing technology.




1
2
3
4
5
6
7
8
10
11
13
14
15



1. Seat
2. Arm rest
3. Engine emergency stop switch
4. Left-hand work lever (joystick)
5. Boom swing pedal (if equipped)
6. Travel pedal
7. 1/2-way pedal (if equipped)
8. Foot vent
9. Defroster vent
10. Travel lever
11. Display monitor
12. Right-hand work lever (joystick)
13. Seat belt
14. Safety lever
15. Aftertreatment system switch
16. Starter switch
17. Quick coupler switch

THE IDEAL WORKSPACE FOR OPERATING IN HIGH COMFORT

ISO-CERTIFIED SAFETY

The DX85R-7 is designed to provide you with the best possible working conditions. The sophisticated state-of-the-art ROPS cab is pressurized and ISO-certified for your safety. Standard LED cab and boom lights, large side mirrors, rear-view and AVM 360° cameras, as options, give you full visibility of the machine's surroundings. Other standard safety features include: automatic overheating alarm warning, low oil pressure sensor, and engine emergency cut-off switch.

UNRIVALLED COMFORT

Comfortably seated thanks to a high-quality heated seat with air suspension, you benefit from a clear all-round view of the work site and have easy access to several storage compartments. Pedals, joysticks and armrests have all been designed for operator comfort and efficiency. Noise and vibration levels are remarkably low, and the effectiveness of the air conditioning and automatic climate control has been increased significantly. These features allow you to continue working for hours on end without feeling tired and maximize your productivity and return on investment. Finally, thanks to the hands-free system, you won't miss any important call, and you'll stay available to your customers as you operate the machine.

THE HIGHEST STANDARDS OF EFFICIENCY AT YOUR FINGERTIPS

Highly sensitive & low-effort joysticks and clear convenient controls enable you to work safely, smoothly & confidently with minimum effort. Proportional auxiliary flow means precision control, smoothness & efficiency when using attachments.

DEVELON SMART TOUCH

The wide 8" touchscreen provides easy scrolling through the different menus, including power settings and auxiliary hydraulics settings. It also allows you to connect a Bluetooth device or listen to your favorite radio station.





MORE DURABILITY – LESS MAINTENANCE

The most advanced technology developed by Develon Infracore Co., Ltd. has been integrated into the DX85R-7 excavator for powerful performance and simple, easy maintenance. This provides the operator with convenient maintenance check points and maximizes the DX85R-7's work efficiency.

SIMPLE MAINTENANCE FOR MAXIMUM UPTIME

DEPENDABLE PERFORMANCE FOR LOW LIFETIME COST

Top quality materials, the most advanced computer-aided design, and endurance testing under the most demanding conditions ensure your excavator keeps on performing. The DX85R-7 has been designed for low maintenance with longer intervals – resulting in more machine availability – while skilled Develon-trained technicians are available to provide extra support when needed.

STRENGTHENED BOOM

Using finite elements and 3-dimensional computer simulation, the shape of the boom has been optimally designed for better load distribution throughout the structure. This enhancement, combined with increased material thickness, limit element fatigue for improved durability and reliability.

MAINTENANCE ACCESS MADE SIMPLE

- A battery cut-off switch makes it easy to disconnect the battery during long-term storage.
- The hour meter display can be easily checked from ground level.
- For extra accessibility and servicing convenience, all filters (engine oil filter, fuel pre-filter, fuel filter and pilot filter) are accessible from ground level.
- Placing MCV in the middle of the machine improves its maintainability and work visibility.
- Fine mesh on the side doors and on the cooler itself filters the intake air going to the cooler for better cooling performance and reduced maintenance.

RUBBER TRACKS

The rubber tracks offer greater non-slip and grip capabilities and are less harmful to sidewalks and road surfaces in urban environments. These rubber shoes can be easily installed or removed with the idler, sprocket and other main parts. The reinforced seal type upper rollers make our traveling system even more durable. The result: longer traveling time and distance, especially in harsher environments. Because the Lower Roller Steel/Rubber shoes are dual flange type, they can be replaced without needing to replace components – ensuring increased lateral lifting force.

ENGINE ROOM

The engine compartment is designed for easier service, and the sturdy sound-proofing inside the engine cover reduces the noise to provide a more comfortable environment for the operator and those working around the machine. The clips make disassembling easy and convenient.

OIL GAUGE

Hydraulic oil level can be easily checked through the gauge on the right side of the hydraulic tank.

GREASE PIPING

Integrated grease piping is designed for easy maintenance of the swing bearing and boom swing cylinder.

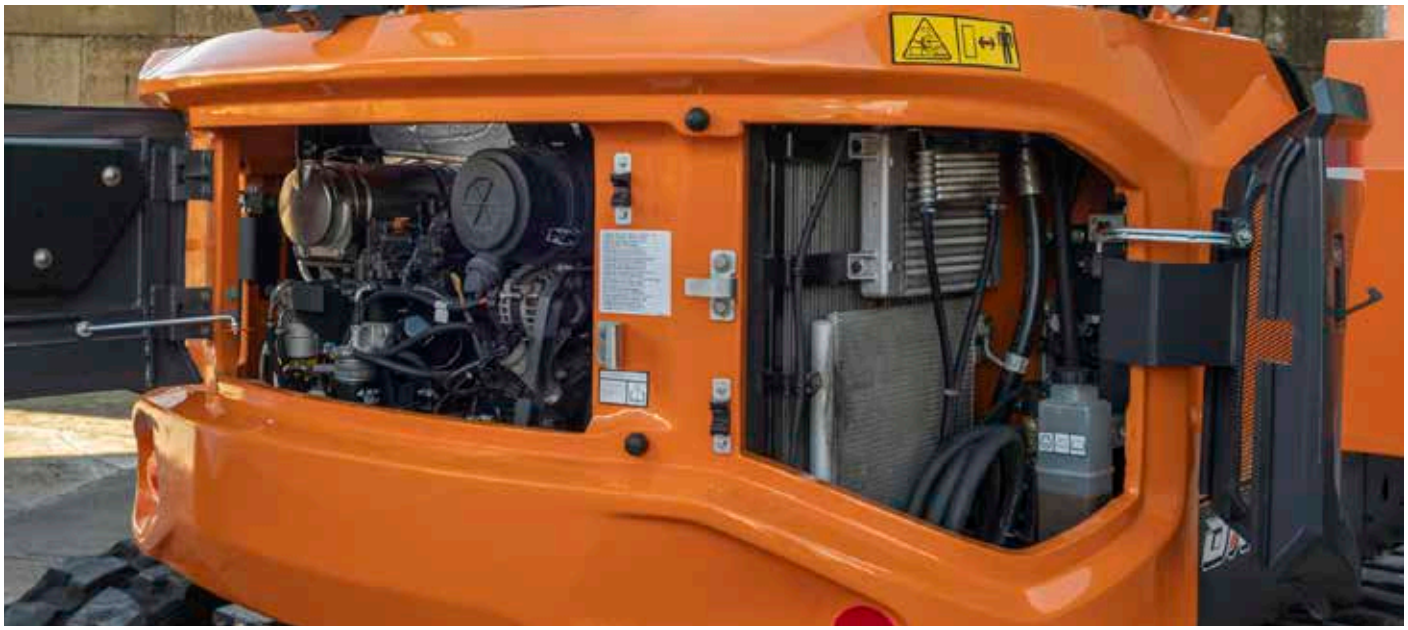

TECHNICAL SPECIFICATIONS

ENGINE

Designed to deliver superior performance and fuel efficiency, the Develon D24 diesel engine fully meets the latest Stage V emission regulations. To optimize machine performance, the engine uses high-pressure fuel injectors, air-to-air inter-cooler and electronic engine controls. 4-Cycle Water-Cooled, Wastegate Turbocharger, Diesel Oxydation Catalyst (DOC), Diesel Particulate Filter (DPF) and EGR.

Model

Develon D24

No. of cylinders

4

Rated power at 2100 rpm

ISO 14396 48.5 kW (65 hp)

Max. torque at 1600 rpm

248 Nm

Idle (low - high)

1000 - 2100 rpm

Displacement

2392 cm³

Bore × stroke

90 mm × 94 mm

Starter

12 V / 2.5 kW

Batteries - Alternator

1 × 12 V, 100 Ah – 13.5 V, 90 A

Air filter

Double element air cleaner

UNDERCARRIAGE

Extremely robust construction throughout - made of high-quality, durable materials, with all welded structures designed to limit stresses.

- Track rollers lubricated for life
- Idlers and sprockets fitted with floating seals
- Track shoes made of induction-hardened alloy with triple grouser
- Heat-treated connecting pins
- Hydraulic track adjuster with shock-absorbing tension mechanism

Upper rollers (standard shoe)

1

Lower rollers

5

Number of links & shoes per side

40

Link pitch

154 mm

HYDRAULIC SYSTEM

The e-EPOS (Electronic Power Optimizing System) is the brain of the excavator – minimizing fuel consumption and optimizing the efficiency of the hydraulic system for all working conditions.
To harmonize the operation of the engine and the hydraulics, the e-EPOS is connected to the engine's electronic control unit (ECU) via a data transfer link.

- 2 travel speeds offer either increased torque or high speed
- Cross-sensing pump system for fuel savings
- Auto-deceleration system
- Flow and pressure control of auxiliary hydraulic circuits from control panel
- Computer-aided pump flow control

Main pump

Tandem axial piston pump (load sensing)
Maximum flow at 2100 rpm 149 l/min

Relief valve settings

Implement	285 kgf/cm²
Travel	300 kgf/cm²
Swing	214 kgf/cm²

HYDRAULIC CYLINDERS

High-strength steel piston rods and cylinder bodies. Shock-absorbing mechanism fitted in all cylinders for shock-free operation and extended piston life.

Cylinders	Quantity	Bore × rod diameter × stroke (mm)
Boom	1	115 × 70 × 775
Arm	1	100 × 65 × 846
Bucket	1	90 (Mono) × 60 × 690 85 (Arti) × 55 × 690
Dozer	1	130 × 80 × 185
Boom swing	1	110 × 60 × 684
Articulated boom	2	100 × 55 × 410

CAB

The air-conditioning and heating systems are integrated for optimal climate control. An automatically-controlled fan supplies the pressurized and filtered cab air, which is distributed throughout the cab from multiple vents. The air suspension, adjustable operator's seat includes a seat belt. The operator can adjust the ergonomic seat and joystick console separately according to his preferences.

A-weighted emission sound pressure level at the operator's position, LpAd (ISO 6396:2008)

Declared: 98 dB(A)

A-weighted sound power level, LwAd (2000/14/EC)

Declared: 75 dB(A)
Measured: 74 dB(A)

SWING MECHANISM

The swing mechanism uses an axial piston motor, driving a 2-stage planetary reduction gear bathed in oil for maximum torque.

- Swing bearing: single-row, shear type ball bearing with induction hardened internal gear
- Internal gear and pinion immersed in lubricant

Maximum swing speed

9.9 rpm

Maximum swing torque

1954 kgf·m

FLUID CAPACITIES

Fuel tank	160 l
Cooling system (radiator)	10 l
Hydraulic oil tank	140 l
Engine oil	8.6 l
Travel device	2 × 1.6 l

DRIVE

Each track is driven by an independent, high-torque axial piston motor through a planetary reduction gearbox. Two levers / foot pedals guarantee smooth travel with counter-rotation on demand. The track frame protects the travel motor, brake and planetary gears. The multi-disc track brakes are spring-applied and hydraulic released.

Travel speed (low - high)

2.9 - 4.8 km/h

Maximum traction

6.6 t

Maximum gradeability

35° / 58%

WEIGHT & GROUND PRESSURE

	Machine weight (kg)	Ground pressure (kgf/cm²)
	DX85R-7	DX85R-7
450 mm rubber shoes	9528	0.42
450 mm steel tracks	9537	0.42

TECHNICAL SPECIFICATIONS

COMPONENT WEIGHTS

Item		Weight (kg)	Remarks
Upper structure without front		4870	Without counterweight
Counterweight		1450	
Lower structure assembly		3250	Rubber shoe
Front assembly		1280	Mono, 1.7 arm, 0.28 bucket
Boom assembly	3.38 m	413	
Articulated boom	1.89 m (lower)	275	
	1.88 m (upper)	259	
Arm assembly	1.7 m	173	
	2.25 m	230	
Bucket	0.28 m³	234	
Boom cylinder		109	
Arm cylinder		77	
Arti. cylinder		46	
Bucket cylinder		56	
Dozer blade		423	
Dozer blade cylinder		63.6	

ARMS

	Length (mm)	Weight (kg)	Digging forces (ISO) (ton)
Standard arm	1700	173	4.46
Long arm	2250	230	3.72

BUCKETS

	Capacity (m³) SAE	Width (mm)		Weight (kg)	Digging forces (ISO) (ton)
		With side cutters	W/O side cutters		
Recommended	0.28	813	707	234	6.70

DIMENSIONS

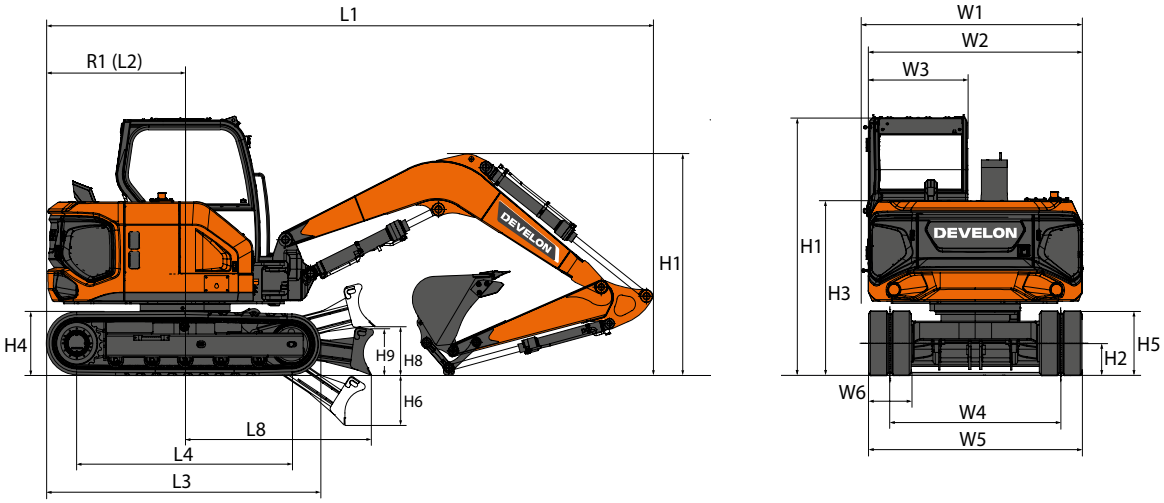

DIMENSIONS

Boom type			Unit	Mono boom		Articulated boom
Boom length			**mm**	**3380**	**3380**	**-**
Arm length			**mm**	**1700**	**2250**	**1700**
Bucket capacity			**m³**	**0.28**	**0.28**	**0.28**
Undercarriage (track + grouser)			**-**	**Rubber**	**Rubber**	**Rubber**
L1	Overall length		mm	6430	6450	6640
H1	Overall height	Boom	mm	2335	2665	2120
		Cab	mm	2657	2657	2657
W1	Overall width		mm	2250	2250	2250
R1	Rear swing radius	Standard	mm	1465	1465	1465
H2	Ground clearance		mm	294	294	294
L2	Rear end distance	Standard	mm	1449	1449	1449
W2	House width		mm	2250	2250	2250
W3	Cab width		mm	1040	1040	1040
H3	Height over cover		mm	1778	1778	1778
H4	Counterweight clearance		mm	758	758	758
H5	Track height		mm	656	656	656
L3	Track length		mm	2952	2952	2952
L4	Tumbler distance		mm	2315	2315	2315
W4	Track gauge		mm	1800	1800	1800
W5	Undercarriage width	Standard	mm	2250	2250	2250
W6	Shoe width		mm	450	450	450
	Grouser height		mm	30	30	30
H6	Dozer digging depth		mm	511	511	511
H8	Dozer lift clearance		mm	502	502	502
H9	Dozer blade height		mm	454	454	454
L8	Distance to dozer end		mm	1972	1972	1972
	Boom swing angle (left/right)		°	60/60		

WORKING RANGE

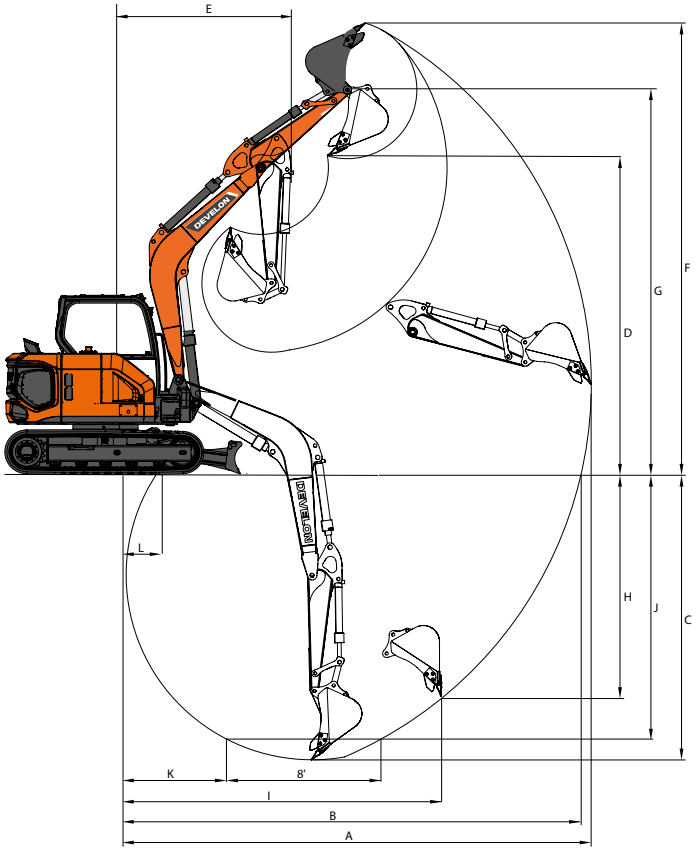

WORKING RANGE

Boom type		Unit	Mono boom		Articulated boom
Boom length		**mm**	**3380**		**Arti (1890 + 1880)**
Arm length		**mm**	**1700**	**2250**	**1700**
Bucket capacity		**m³**	**0.28**		**0.28**
A	Max. digging reach	mm	7015	7530	7280
B	Max. digging reach (ground level)	mm	6850	7380	7130
C	Max. digging depth	mm	4110	4670	4040
D	Max. dumping height	mm	4705	5050	5425
E	Min. swing radius (boom swing)	mm	2775 (2080)	2945 (2250)	2755 (2060)
F	Max. digging height	mm	6690	7035	7440
G	Max. bucket pin height	mm	5715	6060	6430
H	Max. vertical wall depth	mm	3180	3700	3490
I	Max. radius vertical	mm	4825	5005	4630
J	Max. depth to 8' line	mm	3735	4345	3870

LIFTING CAPACITIES

MONO BOOM • W/O BUCKET • BLADE UP

(UNIT: 1000 KG)

A	1.5 m		3.0 m		4.5 m		6.0 m		Max. reach		
B											A
BOOM 3.38 m • Arm 1.7 m • Shoe 450 mm Steel • COUNTERWEIGHT 1.45 t											
4.5 m					1.93 *	1.76			1.73	1.52	4.90
3.0 m			2.91 *	2.91 *	1.96	1.71			1.32	1.16	5.74
1.5 m					1.85	1.6	1.2	1.05	1.2	1.05	6.00
0.0 m			3.25	2.7	1.77	1.52			1.24	1.08	5.81
-1.5 m	4.70 *	4.70 *	3.28	2.73	1.76	1.52			1.5	1.3	5.07
-3.0 m			1.89 *	1.89 *					1.53 *	1.53 *	3.32
BOOM 3.38 m •Arm 2,25 m • Shoe 450 mm Steel • COUNTERWEIGHT 1.45 t											
6.0 m									1.82 *	1.82 *	4.01
4.5 m					1.55 *	1.55 *			1.42 *	1.31	5.56
3.0 m					1.81 *	1.81 *	1.31	1.14	1.21	1.05	6.28
1.5 m			3.72	3.08	1.97	1.69	1.27	1.1	1.11	0.96	6.52
0.0 m			3.46	2.84	1.86	1.59	1.23	1.06	1.14	0.98	6.34
-1.5 m	3.71 *	3.71 *	3.44	2.83	1.83	1.56			1.32	1.14	5.69

MONO BOOM • W/O BUCKET • BLADE DOWN

(UNIT: 1000 KG)

A	1.5 m		3.0 m		4.5 m		6.0 m		Max. reach		
B											A
BOOM 3.38m • ARM 1.7 m • SHOE 450 mm Steel • C OUNTERWEIGHT 1.45 t											
4.5 m					1.93 *	1.93 *			1.90 *	1.90 *	4.90
3.0 m			2.91 *	2.91 *	2.13 *	2.13 *			1.77 *	1.46	5.74
1.5 m					2.63 *	2.04	1.88 *	1.33	1.85 *	1.33	6.00
0.0 m			4.19 *	3.59	2.89 *	1.96			2.01 *	1.38	5.81
-1.5 m	4.70 *	4.70 *	4.24 *	3.62	2.54 *	1.95			2.01 *	1.66	5.07
-3.0 m			1.89 *	1.89 *					1.53 *	1.53 *	3.32
BOOM 3.38m • ARM 2.25 m • SHOE 450 mm Steel • COUNTERWEIGHT 1.45 t											
6.0 m									1.82 *	1.82 *	4.01
4.5 m					1.55 *	1.55 *			1.42 *	1.42 *	5.56
3.0 m					1.81 *	1.81 *	1.68 *	1.36	1.35 *	1.26	6.28
1.5 m			4.24 *	3.79	2.38 *	2.03	1.83 *	1.32	1.40 *	1.16	6.52
0.0 m			4.46 *	3.54	2.80 *	1.92	1.93 *	1.28	1.61 *	1.18	6.34
-1.5 m	3.71 *	3.71 *	4.68 *	3.52	2.71 *	1.89			1.82 *	1.37	5.69

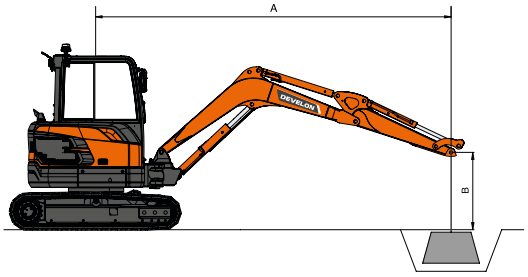

: Rating over front.
: Rating over side or 360°.

1. Lift capacities are in compliance with ISO 10567.
2. Load point is the end of the arm.
3. * = Limited by hydraulic capacities.
4. Lift capacities shown do not exceed 75 % of minimum tipping loads or 87 % of hydraulic capacities.
5. The least stable position is over the side.
6. Lift capacities apply only to the machine as originally manufactured and normally equipped by the manufacturer.

LIFTING CAPACITIES

ARTICULATED BOOM • W/O BUCKET • BLADE UP

A	3.0 m		4.5 m		6.0 m		Max. reach		
B									A
ARTICULATED BOOM 1.89m / 1.88m • ARM 1.7m • SHOE 450mm Steel • COUNTERWEIGHT 1.45 t									
6.0 m	3.03 *	3.03 *					2.89 *	2.63	3.51
4.5 m			2.09	1.79			1.57	1.35	5.25
3.0 m	3.75 *	3.26	2	1.71	1.23	1.06	1.23	1.05	6.02
1.5 m			1.85	1.57	1.2	1.03	1.12	0.96	6.27
0.0 m			1.76	1.48	1.18	1	1.16	0.99	6.08
-1.5 m	3.08 *	2.72	1.76	1.49			1.32 *	1.18	5.39

ARTICULATED BOOM • W/O BUCKET • BLADE DOWN

A	3.0 m		4.5 m		6.0 m		Max. reach		
B									A
ARTICULATED BOOM 1.89m / 1.88m • ARM 1.7m • SHOE 450mm Steel • COUNTERWEIGHT 1.45 t									
6.0 m	3.03 *	3.03 *					2.89 *	2.89 *	3.51
4.5 m			2.19 *	2.14			2.11 *	1.62	5.25
3.0 m	3.75 *	3.75 *	2.40 *	2.06	1.90 *	1.28	1.90 *	1.27	6.02
1.5 m			2.74 *	1.91	1.91 *	1.25	1.77 *	1.17	6.27
0.0 m			2.71 *	1.82	1.71 *	1.22	1.62 *	1.2	6.08

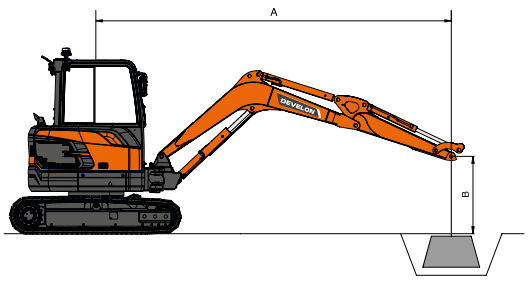

: Rating over front.
: Rating over side or 360°.

1. Lift capacities are in compliance with ISO 10567.
2. Load point is the end of the arm.
3. * = Limited by hydraulic capacities.
4. Lift capacities shown do not exceed 75 % of minimum tipping loads or 87 % of hydraulic capacities.
5. The least stable position is over the side.
6. Lift capacities apply only to the machine as originally manufactured and normally equipped by the manufacturer.

STANDARD AND OPTIONAL EQUIPMENT

Engine

- ● Develon D24 - Common rail diesel engine with direct fuel injection, Stage V compliant
- ● Auto-idle function

Hydraulic system

- ● Variable pistons pump
- ● Breaker piping with direct return to the tank
- ● 2-way high flow auxiliary line with settings from the display panel
- ● Cylinder cushioning & contamination seals
- ● Rotation line (Pero)
- ○ Quick coupler line
- ○ Clamshell

Cab & interior

- ● Pressurized, sound-insulated cab
- ● Air suspension seat with heater
- ● Air conditioning
- ● Pull-up type front window and removable lower front window
- ● Sliding right windows with lock
- ● Ceiling light
- ● Intermittent upper windshield wiper
- ● Multiple storage compartments
- ● Flat, spacious, easy-to-clean floor
- ● Cup holder
- ● Anti-theft protection
- ● DEVELON Smart Touch – 8" touch screen, all-in-one
- ● Electric horn
- ● Engine speed (RPM) control dial
- ● Hydrostatic 2-speed travel system with manual or automatic shift
- ● DAB radio with handsfree call system
- ● USB charger & 12 V power socket
- ● Serial communication port for laptop PC interface
- ● Adjustable PPC for arm, boom, bucket and swing, with sliding proportional control for attachments and auxiliary hydraulic buttons
- ● Travel pedals and hand levers
- ● Master key

Safety

- ● Roll Over Protective Structure (ROPS)
- ● Boom and arm cylinder safety valves
- ● Overload warning device
- ● Rotating beacon
- ● Hydraulic safety lock lever
- ● Safety glass
- ● Hammer for emergency escape
- ● Right and left rearview mirrors
- ● Emergency engine stop switch
- ● Reinforced cast steel pivot points
- ● Battery cut-off switch
- ● LED work light (on the boom)
- ● Lockable fuel cap
- ○ LED additional work lights (1x front cabin)
- ○ Falling Objects Guard System – top and front cab guards (ISO 10262 level II and SAE J1356)
- ○ Rear view camera (with LED light)
- ○ AVM 360° camera

Other

- ● DX85R-7: 3380 mm mono boom – 1700 mm arm – 1450 kg counterweight
- ● Fuel filler pump
- ● DEVELON Fleet Management Web (telematic system)
- ● Boom cylinder guard
- ● Double element air cleaner
- ● Self-diagnostic function
- ● Battery (12 V, 100 Ah), alternator (12 V, 80 A)
- ● Remote greasing for swing circle and workgroup pivot points
- ○ Long arm: 2250 mm
- ○ Articulated boom (1890 mm + 1880 mm) with 1700 mm arm

Undercarriage

- ● Fixed undercarriage
- ● Hydraulic track adjuster
- ● 450 mm rubber tracks
- ● Greased and sealed track links
- ○ Dozer double check valve (kit)
- ○ 450 mm steel tracks
- ○ 450 mm steel tracks with rubber pad

Powered by **Innovation**

DISCOVER MORE:
DX85R-7

DEVELON

DOOSAN Infracore Europe s.r.o.
IBC - Pobřežní 620/3, 186 00 Praha 8-Karlín
Czech Republic

©2023 DEVELON D4601212-EN (04-23)

Certain specification(s) are based on engineering calculations and are not actual measurements. Specification(s) are provided for comparison purposes only and are subject to change without notice.
Specification(s) for your individual Develon equipment will vary based on normal variations in design, manufacturing, operating conditions, and other factors. Pictures of Develon units may show other than standard equipment.