DEVELON

Crawler Excavators

DX800LC-7



Maximum power	402 hp
Operating weight	79.5 t
Bucket capacity	4.26 - 5.24 m^3


DEVELON



DEVELON DX800LC-7 CRAWLER EXCAVATOR:

MADE FOR THE TOUGHEST APPLICATIONS

Lift your business to the next level with the DX800LC-7 Develon excavator.

Strong undercarriage, and the highest engine power and hydraulic flow in the market, with total control of the fuel consumption, to offer the lowest possible cost per ton.

RAISE PROFITS, PRODUCTIVITY & FUEL EFFICIENCY

HIGH PRODUCTIVITY AND LOW COST OF OWNERSHIP

Delivers higher productivity and reduced fuel consumption in an efficient and comfortable work environment.

RELIABILITY

Designed for the toughest applications, for the most abrasive materials.

SAFETY

Your safety is our priority: 360° camera system, large side mirrors, Powerful LED work lights, anti-slip steps and platforms, guard rails on upper structure.

VERSATILITY

5 front combinations possible to match all applications. Mass excavation front with large bucket size or heavy-duty fronts when more reach is needed.

SWING BEARINGS

Unique design of crossed bearings, for better stress distribution, and increased lifetime.



UNDERCARRIAGE DURABILITY

Heavy-duty undercarriage, with large rollers and sprocket, enhanced frame for the toughest applications.



EASY MAINTENANCE

Automatic greasing system as an option, all filters easily accessible, compressor with air gun as option, everything designed for easy maintenance.

COMFORT

One of the most spacious cabs in the market, with low noise & vibration levels and excellent all-round visibility. Fully adjustable heated air-suspension seat, air conditioning with climate control as standard.

ENGINE

Exceptionally powerful – with high torque at low revs – the Perkins 2506J engine combines reliability and low environmental impact. This Stage V compliant 6 cylinder engine delivers 402 kW at 1800 rpm.

ADVANCED FILTRATION

Highest efficiency filters & cleaners remove water, dust & particles to protect your investment optimally.

OPERATE AT EASE

All important information is at your fingertips with the new easy-to-use 8" touch screen. Exclusive jog shuttle switch, 4 work & 4 power modes, proportional control.

EXCELLENT FUEL EFFICIENCY

The Smart Power Control (SPC) system increases fuel efficiency by adjusting the power to meet the application's needs. The system delivers the exact amount of oil needed to avoid any loss of energy.





D·ECO POWER

Real breakthrough technology that sets new standards in the industry: The exclusive ECO Power system improves productivity and saves fuel. A pressure-controlled pump, closed-center main control valve, and 9 sensors electronically detect and control the precise amount of hydraulic oil required to perform a task. The exact amount of oil required is metered instead of continuously forcing a fixed amount of oil through the system. The hydraulic system output requirements are optimized with engine horsepower. The resulting efficiency educes fuel consumption improves productivity substantially. Improved feedback through the controls results in an outstanding level of operator comfort and much smoother machine management.

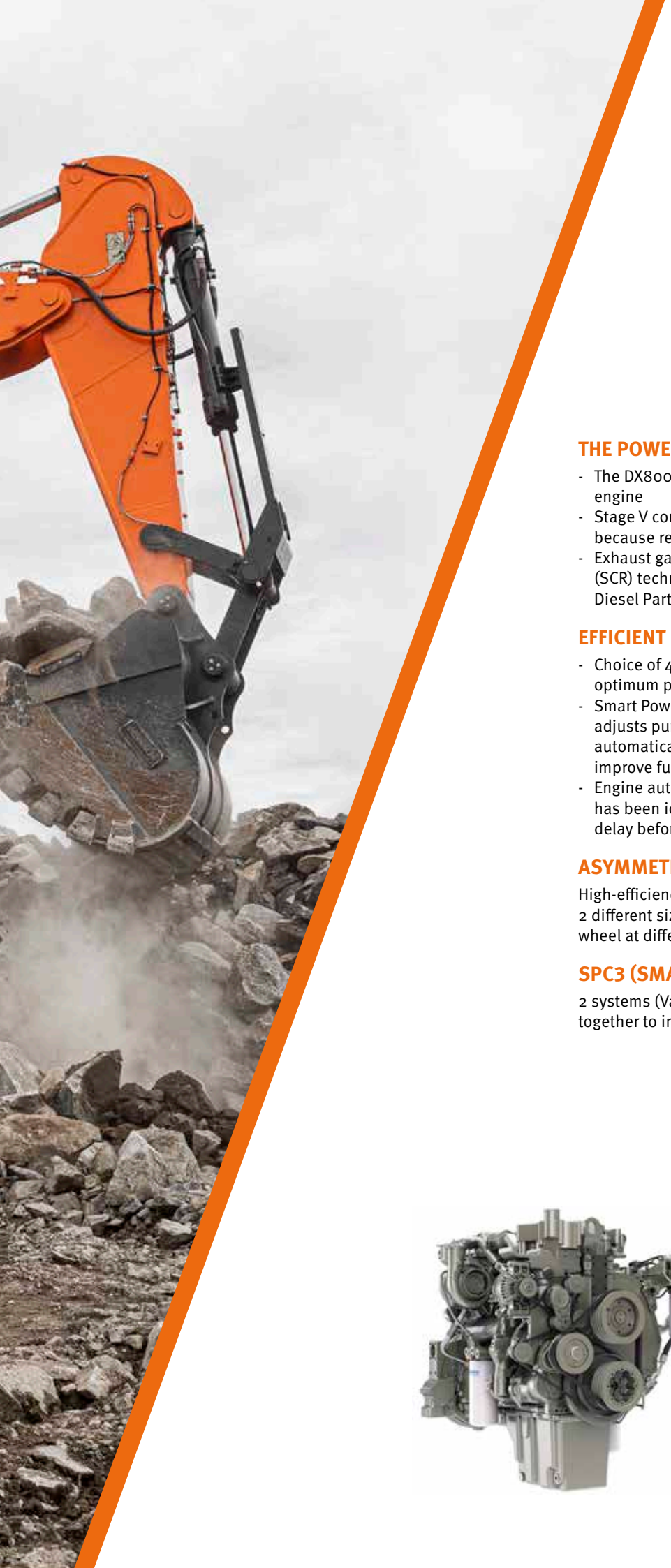

TOP PERFORMANCE AND FUEL EFFICIENCY

THE POWER TO RAISE PRODUCTIVITY

- The DX800LC-7 is equipped with the latest generation of Perkins engine
- Stage V compliant, this engine boasts extremely low emissions because reducing our environmental impact is paramount to us
- Exhaust gases are purified by Selective Catalytic Reduction (SCR) technology, a Diesel Oxidation Catalyst (DOC) and a Diesel Particulate Filter (DPF)

EFFICIENT FUEL MANAGEMENT

- Choice of 4 power modes and 4 working modes guarantees optimum performance in all conditions
- Smart Power Control (SPC3) system: reduces engine speed and adjusts pump torque according to work conditions. The system automatically adjusts engine power and hydraulic output to improve fuel efficiency and reduce emissions
- Engine auto-shut-off: shuts down the engine after the machine has been idling for a specified time. The operator can set the delay before shut-off via the touchscreen

ASYMMETRIC TURBOCHARGER

High-efficiency asymmetric turbocharger uses a design with 2 different sized scrolls to stream exhaust across the turbine wheel at different velocities.

SPC3 (SMART POWER CONTROL)

2 systems (Variable Speed Control and Pump Torque Control) work together to improve efficiency while maintaining productivity.





RELIABILITY – THE HABIT OF A LIFETIME

In your profession, you need equipment you can depend on. At Develon, we put durability and reliability at the core of our machines' development. Our materials and structures undergo stringent testing for strength and resilience under the most extreme conditions.

DESIGNED FOR LONG-TERM, ALL-ROUND, HEAVY-DUTY PERFORMANCE

EXTRA-STRONG X CHASSIS

Designed using finite element analysis and 3D computer simulation, the X-shaped undercarriage ensures optimum structural integrity and durability.

UNDERCARRIAGE DURABILITY

- Large chain composed of sealed, self-lubricating links for long-term dependability. For improved protection, alignment and performance, there is a full-length guard optional, according to the application
- The track spring and idler are joined for long-lasting performance and easy maintenance
- Cast steel heavy-duty sprockets guarantee the highest resistance
- The track rollers are lubricated for life

STRENGTHENED BOOM AND ARM

During the development of our machines, we use intensive testing to calculate the best load distribution throughout the boom structure.
Combined with thicker material, this means that element fatigue is limited and both reliability and component life are increased.
To better protect the base of the arm, reinforced bars have been added and the arm center and end boss have been strengthened.

ADVANCED FILTRATION

- Fuel filters and water separator: a filter-type high-performance water separator effectively captures moisture in the fuel, reducing impurities and helping minimize any fuel-related issues. Pre-filters and dual main filters as standard achieve a high degree of purity that minimizes fuel system failures.
- Cyclonic air pre-cleaner: air filter life and engine efficiency are directly related to the amount of debris ingested through the engine's air intake. Therefore, a cyclonic air pre-cleaner (as standard) is the first stage of an air intake system that prevents the majority of heavier-than-air particles from entering. Self-cleaning and maintenance-free, the system is able to expel all types of mixed debris, including mud, snow, rain, leaves, sawdust, chaff, etc.

ADVANCED PIN AND BUSHING TECHNOLOGY

Highly lubricated metal is used for the boom pivot to increase the component's lifetime and lengthen greasing intervals. The bucket pivot features EM (Enhanced Macrosurface) bushings. These have a tailored surface pattern and self-lubricating coating for optimized greasing and more efficient debris removal. Ultra-hard wear-resistant discs and bucket pivot polymer shims increase durability even more.









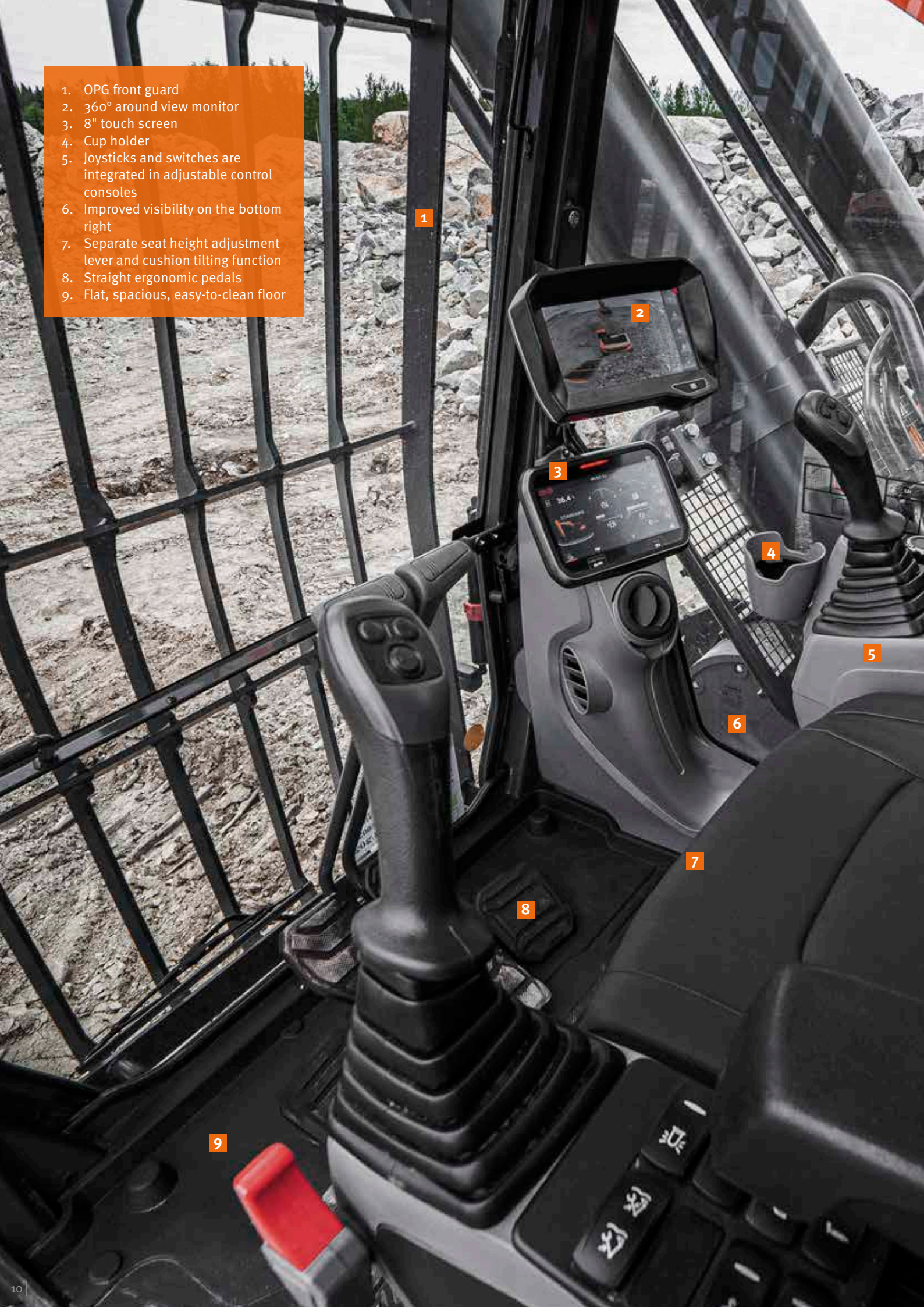

1. OPG front guard
2. 360° around view monitor
3. 8" touch screen
4. Cup holder
5. Joysticks and switches are integrated in adjustable control consoles
6. Improved visibility on the bottom right
7. Separate seat height adjustment lever and cushion tilting function
8. Straight ergonomic pedals
9. Flat, spacious, easy-to-clean floor

OPERATING IN HIGH COMFORT

BEST-IN-CLASS OPERATOR ENVIRONMENT

The DX800LC-7 is designed to provide you with the best possible working conditions. The sophisticated state-of-the-art cab is pressurized and compliant with the level 2 FOPS protection when equipped with FOPS guard for your safety. A high-quality heated seat with air suspension provides maximum operator comfort.

FIRST CLASS COMFORT

Comfortably seated, you benefit from a clear all-round view of the worksite and have easy access to several storage compartments. Noise and vibration levels are remarkably low, while air conditioning and automatic climate control allow you to keep working for hours on end without feeling tired.
Pedals, joysticks and armrests have all been designed for operator comfort and efficiency.

CAB SUSPENSION

The cab's suspension system (CabSus mount) dampens vibrations and provides outstanding protection against impact. This system absorbs shocks and vibrations much more effectively than a conventional silentblock suspension system.

KING SIZE TOUCHSCREEN

The wide 8" touchscreen provides easy scrolling through the different menus, including power settings and auxiliary hydraulics settings. It also allows you to connect a Bluetooth device or listen to your favorite radio station.

360° CAMERA SYSTEM

The 360° camera system gives you full view of the machine's surroundings.





1. Shear buttons
2. Breaker/booster button
3. Starter switch (Start/Stop button)
4. Engine speed control dial
5. Travel speed selector switch
6. Light switch
7. Cab work light switch
8. After-treatment system switch
9. Bluetooth control panel
10. Air conditioning and heating control panel

TAKE A SEAT IN BUSINESS CLASS

The ergonomic controls and the easy-to-view color monitor place the machine firmly in your hands.

TOTAL CONTROL IN ALL SIMPLICITY

DYNAMIC POWER MANAGEMENT

- Automatic travel speed range selection (slow/fast)
- Activating the power boost control system increases digging force by 10%
- A one-touch deceleration button immediately reduces engine speed to low idle
- Auto-idling starts 4 seconds (adjustable) after all controls are returned to neutral – reducing fuel consumption and noise levels in the cab

"INTELLIGENT FLOATING BOOM" MODE

The “intelligent floating boom” function allows the boom to move up and down freely according to the application:

- Hydraulic breaker setting: during boom down operation, the boom moves down freely under its own weight. The result is reduced shock and vibration and longer breaker service life
- Full float setting: during boom down selection, the boom is allowed to rise and fall as required while the bucket is drawn across the ground

EXPERT FINGERTIP CONTROL

- The new multi-function 8" touchscreen displays all useful information in a visual and intuitive format
- At a glance, you can check the machine’s status and settings to achieve optimal efficiency
- Develon’s unique jog shuttle switch gives you easy and precise control over all machine functions
- Highly sensitive and low-effort joysticks enable you to work safely, smoothly and confidently
- The proportional thumb switches on the joysticks can be mounted horizontally or vertically, as the operator prefers, for optimal control of hydraulic attachments



4 WORK MODES AND 4 POWER MODES + BOOM / SWING PRIORITY CONTROL

Delivers the needed power according to your specific application while minimizing fuel consumption:

- 1-way mode, 2-way mode, digging mode and lifting mode
- Power plus mode, power mode, standard mode, economy mode
- Boom / swing priority control allows you to control operating modes with just 1 button – resulting in more comfortable and productive operation optimized for various work environments

BOOM PRIORITY MODE

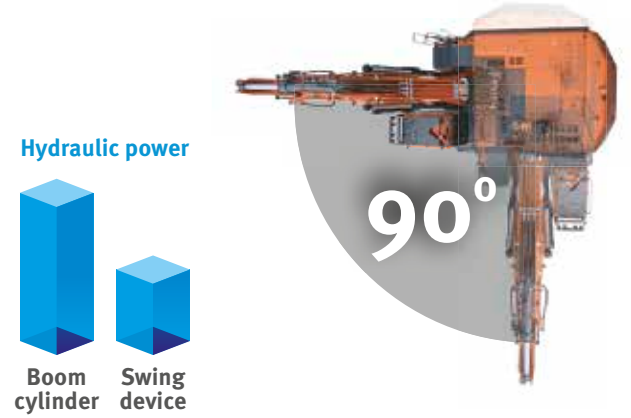

SWING PRIORITY MODE

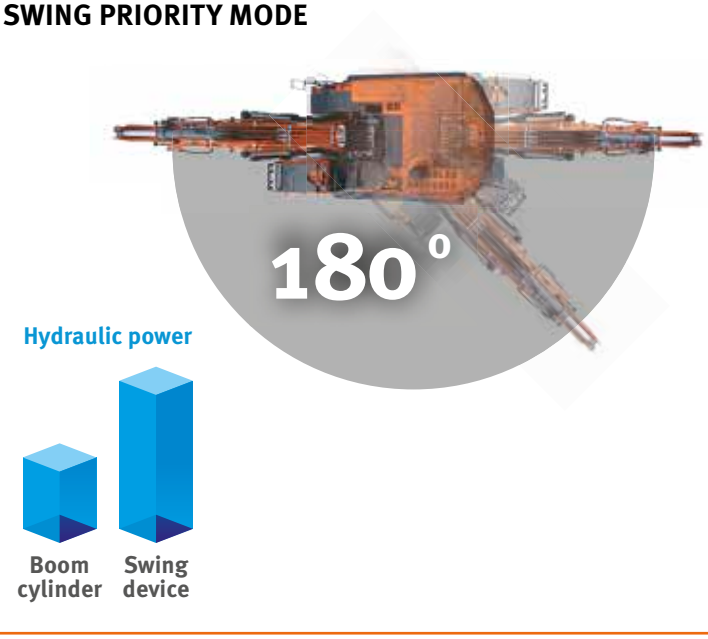



SIMPLE MAINTENANCE WITH MAXIMUM UPTIME

MAINTENANCE ACCESS MADE SIMPLE

- Large guard rails are installed along with anti-slip steps and plates, for safer, easier access to the whole upper structure.
- The air conditioning filter is placed on the side of the cab for easy access. The filter's cover can be locked and opened with the starter key.
- A battery cut-off switch makes it easy to disconnect the battery for long-term storage.
- The hour meter display can be easily checked from ground level.
- Shut-off valves have been fitted on the pre-filter piping line and fuel tank drain piping to make servicing easier and prevent pollution from leakage.
- Engine parts can be easily reached via the top and side panels.
- 2 large separated cooling compartments equipped with reversible fans as standard increase the cooling performance and simplify maintenance.
- For extra accessibility and servicing convenience, all filters (engine oil filter, fuel pre-filters, fuel filters and pilot filter) are located in the pump compartment.

ADBLUE® TANK

Connected to the ECU, sensors in the tank detect low levels of AdBlue® or any other system malfunction.

CENTRALIZED GREASING POINTS

To make maintenance easier, the greasing points have been centralized. An automatic lubrication system is available as an option.



TECHNICAL SPECIFICATIONS

ENGINE

Designed to deliver superior performance and fuel efficiency, the Perkins 2506J diesel engine meets stage V emission regulations. Using SCR / DOC / and DPF technologies for the lowest impact possible on the environment

Model

Perkins 2506J

No. of cylinders

6

Rated power at 1800 rpm

ISO 14396, gross 402 kW (539 hp)

Max. torque at 1400 rpm

251.7 kgf·m

Idle (low - high)

900 [±10] - 1800 [±10] rpm

Displacement

15.2 l

Bore × stroke

137.2 mm × 171.4 mm

Starter

24 V / 9 kW

Batteries - Alternator

2 × 12 V, 200 Ah - 24 V, 115 A

Air filter

Double element air cleaner and pre-filtered Cyclone Turbo dust separator

HYDRAULIC SYSTEM

The e-EPOS (Electronic Power Optimising System) is the brain of the excavator – minimising fuel consumption and optimizing the efficiency of the hydraulic system for all working conditions. To harmonise the operation of the engine and the hydraulics, the e-EPOS is connected to the engine's electronic control unit (ECU) via a data transfer link.

- The hydraulic system enables independent or combined operations
- 2 travel speeds offer either increased torque or high speed
- Cross-sensing pump system for fuel savings
- Auto-deceleration system
- 4 operating modes, 4 power modes
- Swing or boom priority selectable via a switch in the cab

Main pumps

2 × variable displacement tandem axial piston pumps
Maximum flow at 1800 rpm 2 × 504 l/min

Pilot pump

Gear pump
Maximum flow at 1800 rpm 50.4 l/min

Relief valve settings

Implement	350 bar (357 kgf/cm²)
Travel	350 bar (357 kgf/cm²)
Swing	350 bar (357 kgf/cm²)
Pilot	40 bar (40.8 kgf/cm²)

UNDERCARRIAGE

Extremely robust construction throughout - made of high-quality, durable materials, with all welded structures designed to limit stresses.

- Track rollers lubricated for life
- Idlers and sprockets fitted with floating seals
- Track shoes made of induction-hardened alloy with double grouser
- Heat-treated connecting pins
- Hydraulic track adjuster with shock-absorbing tension mechanism

Upper rollers (standard shoe)

3

Lower rollers

8

Number of links & shoes per side

48

Link pitch

260 mm

HYDRAULIC CYLINDERS

High-strength steel piston rods and cylinder bodies. Shock-absorbing mechanism fitted in all cylinders for shock-free operation and extended piston life.

Cylinders	Quantity	Bore × rod diameter × stroke (mm)
Boom	2	190 × 125 × 1795
Arm	1	215 × 150 × 2030
Bucket	1	190 × 130 × 1465

CAB

The air-conditioning and heating systems are integrated for optimal climate control. An automatically-controlled fan supplies the pressurised and filtered cab air, which is distributed throughout the cab from multiple vents. The heated air suspension, adjustable operator's seat includes a seat belt. The operator can adjust the ergonomic seat and joystick console separately according to his preferences.

A-weighted emission sound pressure level at the operator's position, LpAd (ISO 6396:2008)

70 dB(A)

A-weighted sound power level, LwAd (2000/14/EC)

107 dB(A)

FLUID CAPACITIES

Fuel tank	890 l
Cooling system (radiator)	86 l
Hydraulic oil tank	790 l
Engine oil	60 l
Swing drive	2 × 8 l
Travel device	2 × 20 l

SWING MECHANISM

The swing mechanism uses two axial piston motors, driving a 2-stage planetary reduction gear bathed in oil for maximum torque.

- Swing bearings: Unique design of crossed bearings, for better stress distribution, and increased lifetime
- Internal gear and pinion immersed in lubricant

Maximum swing speed

7.4 rpm

Maximum swing torque

31600 kgf·m

DRIVE

Each track is driven by an independent, high-torque axial piston motor through a planetary reduction gearbox. Two levers / foot pedals guarantee smooth travel with counter-rotation on demand. The track frame protects the travel motor, brake and planetary gears. The multi disc track brakes are spring-applied and hydraulic released.

Travel speed (low - high)

2.9 - 4.8 km/h

Maximum traction

70.7 t

Maximum gradeability

35° / 70%

WEIGHT

	Shoe width (mm)	Machine weight (t)	Ground pressure (kgf/cm²)
Double grouser	650 (Std)	79.5	1.12
	750	80.4	0.99
	900	82.1	0.83

COMPONENT WEIGHTS

Item	Unit	Weight	Remarks
Upper structure without front	kg	29650	With counterweight
Lower structure assembly	kg	29885	
Counterweight	kg	10700	
Front assembly	kg	15440	Based on standard
Boom	mm kg	6650 / 7700 5560 / 5840	Including bushings
Arm	mm kg	2600 / 2900 / 3550 2445 / 2630 / 2655	Including bushings

TECHNICAL SPECIFICATIONS

BUCKETS

Bucket Type	Capacity (m^3) SAE	Width (mm)		Radius (mm)	Weight (kg)	650 mm double grouser shoes			
						6.65 m boom		7.7 m boom	
		W/O side cutters	With side cutters			2.6 m arm	2.9 m arm	2.9 m arm	3.55 m arm
H Class	3.42	1.72	1.72	2121	3412	A	A	A	B
	3.68	1.82	1.82	2121	3518	A	A	A	B
	4.05	1.72	1.72	2142	3727	A	A	B	C
	4.43	1.85	1.85	2142	3874	A	A	C	C
	4.64	1.92	1.92	2142	3953	A	A	C	D
	5.24	1.91	1.91	2186	4187	B	B	D	D
	5.58	2.01	2.01	2186	4381	B	C	D	-
S Class	3.75	1.62	N/A	2146	4084	A	A	B	C
	4.05	1.72	N/A	2146	4208	A	A	C	C
	4.64	1.92	N/A	2146	4535	A	B	D	D
	5.24	1.91	N/A	219	4648	B	C	D	-
X Class	3.75	1.65	N/A	2146	4294	A	A	B	C
	4.05	1.75	N/A	2146	4429	A	A	C	C
	4.64	1.95	N/A	2146	4785	A	B	D	D
	5.24	1.94	N/A	219	4964	B	C	D	-

A: Suitable for materials with a density less than or equal to 2100 kg/m³
B: Suitable for materials with a density less than or equal to 1800 kg/m³
C: Suitable for materials with a density less than or equal to 1500 kg/m³
D: Suitable for materials with a density less than or equal to 1200 kg/m³
- : Not recommended
Based on ISO 10567 and SAE J296, arm length without quick-coupler. For reference only.

X CLASS (X-TREME MINING) BUCKET

The X CLASS (X-TREME MINING) BUCKET is designed for use in high-density mining & quarry applications using high-strength and abrasion-resistant materials. This bucket can be used in the toughest of applications.

Features & Benefits

- 4 different sizes are available.
- Diamond folded section for greater structural strength.
- Overlapping plate for protecting lip plate and increasing strength.
- Optimized shape for high penetration and heel clearance.
- Deep profile for high capacity.
- Low tip radius for greater digging performance.
- Optimized design of genuine Develon SD (Severe Duty) tooth for durability and productivity.
- More patches added for durability and strength.
  - Diamond folded section wear plate for extra strength.
  - Wear pads and bottom section.
  - Muscle pack heels to increase durability and protect shell from wear.
- High-grade material composition for better durability.
- Incredible strength with lip plate using 500BHN.
- Higher abrasion-resistance using 400BHN.
- Internal wear-strap kit using 400BHN.
- Additional wear parts designed to protect bucket structure from wear and to make replacement during bucket maintenance easy.

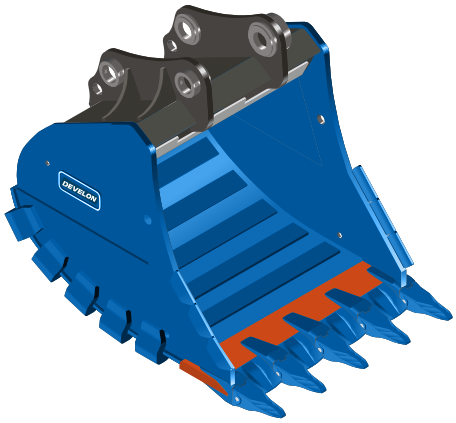

High-strength steel
High-abrasion-resistant steel
500BHN, High-abrasion-resistant steel

Classification	Model name	Width (mm)	Capacity (m^3)	Lip plate (mm)
DX800LC-7	X80-1600	1,600	3.75	70
	X80-1700	1,700	4.05	70
	X80-1900	1,900	4.64	70
	X80-2100	2,100	5.24	70

LIFTING CAPACITIES

W/O BUCKET

(UNIT: 1000 KG)

A	3.0 m		4.5 m		6.0 m		7.5 m		9.0 m		10.5 m		Max. reach		
B															A
Boom 6.65 m • Arm 2.6 m • Shoe 650 mm • Counterweight 10.7 t															
9.0 m													18.29 *	18.29 *	6.49
7.5 m							18.76 *	18.76 *					17.03 *	17.03 *	7.70
6.0 m					21.80 *	21.80 *	19.14 *	19.14 *					16.68 *	16.12	8.48
4.5 m					24.37 *	24.37 *	20.25 *	19.13					16.94 *	14.55	8.93
3.0 m					26.80 *	25.62	21.44 *	18.46	18.29 *	14.10			17.76 *	13.82	9.12
1.5 m					28.12 *	24.71	22.18 *	17.93	18.29 *	13.86			18.15 *	13.73	9.06
0.0 m					27.92 *	24.28	22.02 *	17.63					18.18 *	14.33	8.74
-1.5 m			33.18 *	33.18 *	26.07 *	24.26	20.38 *	17.63					17.98 *	15.87	8.12
-3.0 m	32.74 *	32.74 *	27.71 *	27.71 *	21.94 *	21.94 *							17.07 *	17.07 *	7.14
-4.5 m			18.13 *	18.13 *									14.20 *	14.20 *	5.56
Boom 6.65 m • Arm 2.9 m • Shoe 650 mm • Counterweight 10.7 t															
9.0 m													16.02 *	16.02 *	6.85
7.5 m							17.94 *	17.94 *					15.02 *	15.02 *	8.00
6.0 m					20.99 *	20.99 *	18.51 *	18.51 *					14.75 *	14.75 *	8.75
4.5 m					23.62 *	23.62 *	19.72 *	19.17	17.52 *	14.40			14.99 *	13.89	9.20
3.0 m					26.20 *	25.69	21.02 *	18.46	17.97 *	14.07			15.70 *	13.21	9.38
1.5 m					27.79 *	24.69	21.92 *	17.87	18.18 *	13.77			17.00 *	13.11	9.32
0.0 m					27.91 *	24.17	21.97 *	17.52	17.59 *	13.63			17.58 *	13.62	9.00
-1.5 m			34.08 *	34.08 *	26.41 *	24.07	20.72 *	17.45					17.50 *	14.97	8.41
-3.0 m	35.79 *	35.79 *	29.06 *	29.06 *	22.83 *	22.83 *							16.89 *	16.89 *	7.47
-4.5 m			20.46 *	20.46 *	14.74 *	14.74 *							14.60 *	14.60 *	6.02
Boom 7.7 m • Arm 2.9 m • Shoe 650 mm • Counterweight 10.7 t															
9.0 m							16.17 *	16.17 *					15.97 *	15.97 *	8.35
7.5 m							16.55 *	16.55 *	15.39 *	14.72			15.32 *	13.8	9.32
6.0 m					21.04 *	21.04 *	17.65 *	17.65 *	15.69 *	14.44			15.00 *	12.15	9.97
4.5 m					23.85 *	23.85 *	19.06 *	18.41	16.35 *	14.00			14.85 *	11.2	10.36
3.0 m							20.36 *	17.59	17.02 *	13.55	14.83 *	10.77	14.79 *	10.73	10.53
1.5 m							21.14 *	16.99	17.43 *	13.18			14.77 *	10.66	10.47
0.0 m					26.61 *	22.99	21.15 *	16.66	17.32 *	12.96			14.72 *	10.99	10.19
-1.5 m					25.10 *	23.01	20.25 *	16.59	16.37 *	12.94			14.53 *	11.83	9.67
-3.0 m	28.71 *	28.71 *	26.83 *	26.83 *	22.38 *	22.38 *	18.12 *	16.79					13.99 *	13.49	8.87
-4.5 m			21.17 *	21.17 *	17.82 *	17.82 *	13.45 *	13.45 *					12.58 *	12.58 *	7.69
Boom 7.7 m • Arm 3.55 m • Shoe 650 mm • Counterweight 10.7 t															
10.5 m													13.18 *	13.18 *	7.73
9.0 m									12.49 *	12.49 *			12.18 *	12.18 *	9.03
7.5 m									14.43 *	14.43 *			11.73 *	11.73 *	9.93
6.0 m							16.75 *	16.75 *	14.97 *	14.70	12.25 *	11.33	11.64 *	11.24	10.54
4.5 m					22.64 *	22.64 *	18.31 *	18.31 *	15.78 *	14.23	14.19 *	11.13	11.83 *	10.43	10.91
3.0 m					25.29 *	24.76	19.82 *	17.92	16.62 *	13.73	14.53 *	10.88	12.28 *	10.01	11.07
1.5 m					26.82 *	23.69	20.89 *	17.23	17.24 *	13.30	14.73 *	10.65	13.06 *	9.93	11.01
0.0 m					27.03 *	23.17	21.26 *	16.79	17.42 *	13.01	14.52 *	10.51	14.01 *	10.18	10.75
-1.5 m			30.83 *	30.83 *	26.05 *	23.03	20.78 *	16.61	16.92 *	12.90			13.99 *	10.85	10.26
-3.0 m	29.91 *	29.91 *	29.76 *	29.76 *	23.90 *	23.19	19.23 *	16.69	15.27 *	13.01			13.76 *	12.15	9.51
-4.5 m	29.28 *	29.28 *	24.71 *	24.71 *	20.20 *	20.20 *	15.99 *	15.99 *					13.01 *	13.01 *	8.42
-6.0 m			16.88 *	16.88 *	13.59 *	13.59 *							10.81 *	10.81 *	6.84

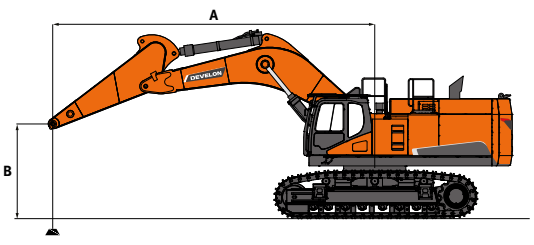

: Rating over front.
: Rating over side or 360°.

1. Lifting capacities are in compliance with ISO 10567:2007(E).
2. The load point is at the end of the arm.
3. * = The nominal loads are based on hydraulic capacity.
4. The nominal loads shown do not exceed 75% of tipping loads or 87% of hydraulic lifting capacity.
5. For lifting capacity with bucket, simply subtract the actual weight of the bucket from the values.
6. The configurations indicated do not necessarily reflect the standard equipment of the machine.

DIMENSIONS

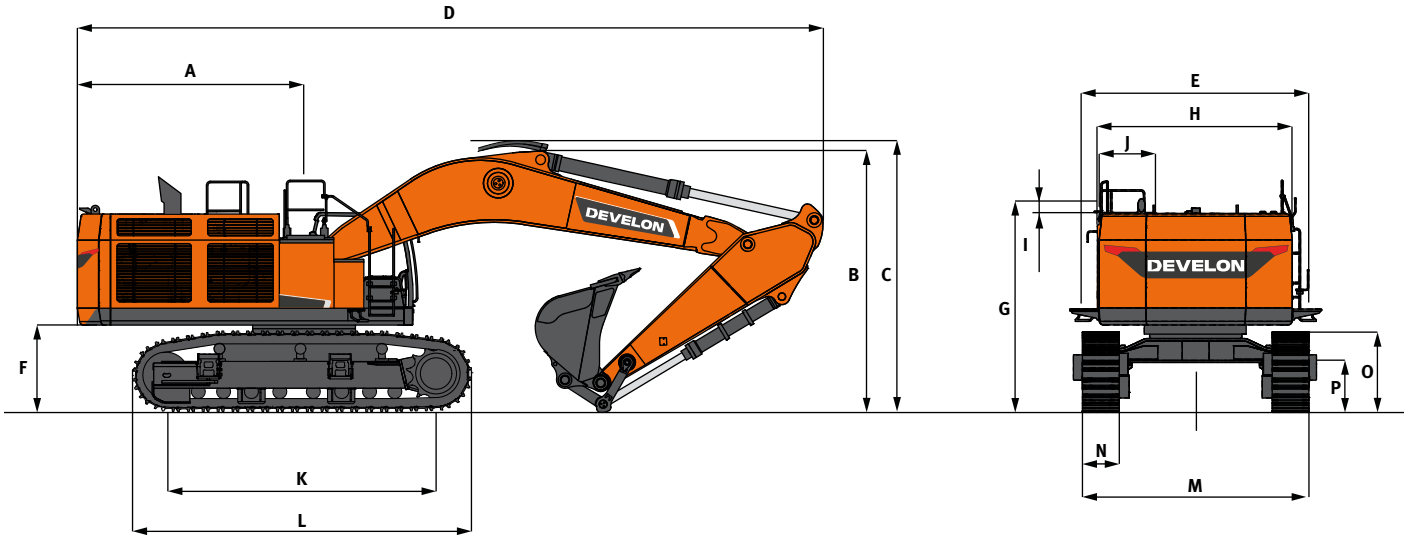

DIMENSIONS

	Unit	One-piece boom			
Boom length	**mm**	**7700**		**6650**	
Arm length	**mm**	**3550**	**2900**	**2900**	**2600**
Bucket capacity (SAE)	**m³**	**3.42**	**4.05**	**4.43**	**4.43**
A Tail swing radius	mm	4010	4010	4010	4010
B Shipping height (boom)	mm	4615	4420	4905	4760
C Shipping height (hose)	mm	4865	4690	5125	4990
D Shipping length	mm	13165	13370	12320	12370
E Shipping width	mm	3560	3560	3560	3560
F Counterweight clearance	mm	1540	1540	1540	1540
G Height over cab	mm	3530	3530	3530	3530
H House width	mm	3410	3410	3410	3410
I Cab height above house	mm	25	25	25	25
J Cab width	mm	1010	1010	1010	1010
K Tumbler distance	mm	4730	4730	4730	4730
L Track length	mm	5960	5960	5960	5960
M Undercarriage width*	mm	3400/4000	3400/4000	3400/4000	3400/4000
N Shoe width	mm	650	650	650	650
O Track height**	mm	1315	1315	1315	1315
P Ground clearance	mm	850	850	850	850

* retracted / extended
** without grouser

WORKING RANGE

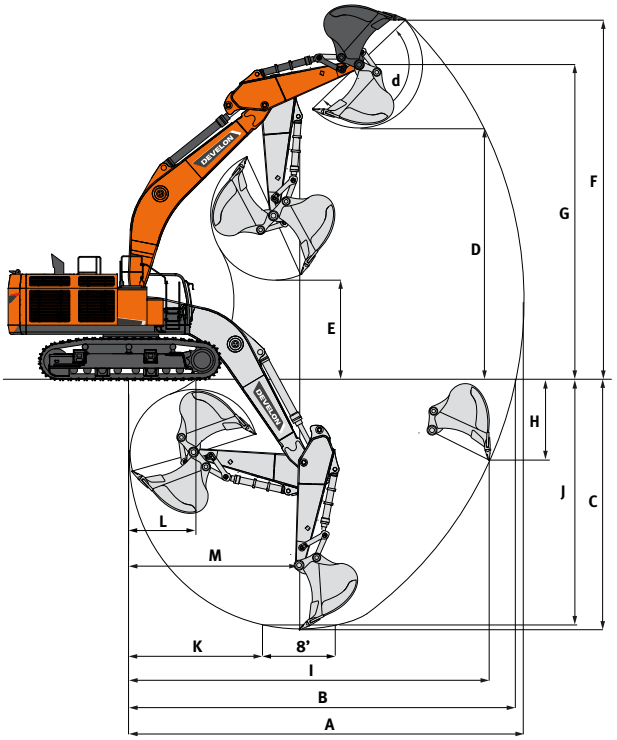

WORKING RANGE

	Unit	One-piece boom			
Boom length	**mm**	**7700**		**6650**	
Arm length	**mm**	**3550**	**2900**	**2900**	**2600**
Bucket capacity (SAE)	**m³**	**3.42**	**4.05**	**4.43**	**4.43**
A Max. digging reach	mm	13195	12670	11510	11250
B Max. digging reach (ground)	mm	12925	12390	11200	10935
C Max. digging depth	mm	8345	7725	6985	6685
D Max. loading height	mm	8405	8245	7140	7060
E Min. loading height	mm	3325	3975	3195	3495
F Max. digging height	mm	12120	11910	10760	10700
G Max. bucket pin height	mm	10525	10390	9260	9180
H Max. vertical wall depth	mm	4705	2455	3280	2960
I Max. radius vertical	mm	10935	11590	9850	9740
J Max. digging depth (8' level)	mm	8205	7565	6820	6515
K Min. radius (8' level)	mm	4490	4495	3740	3725
L Min. digging reach	mm	2285	2990	1920	2110
M Min. swing radius	mm	5730	5775	5240	5200
d Bucket angle	°	178.1	178.1	178.1	178.1

DIGGING FORCES (ISO)

	Unit	One-piece boom			
Boom length	**mm**	**7700**		**6650**	
Arm length	**mm**	**3550**	**2900**	**2900**	**2600**
Bucket capacity (SAE)	**m³**	**3.42**	**4.05**	**4.43**	**4.43**
BUCKET	ton	35.3	38.6	39.8	39.8
ARM	ton	29.3	33.6	34.3	36.6

STANDARD AND OPTIONAL EQUIPMENT

● Standard ○ Optional

Engine

- ● Perkins 2506J, Stage V compliant, SCR, and DOC and DPF post treatment
- ● Variable Turbo Charger and air-to-air intercooler
- ● Auto-idle function
- ● Auto shut-off

Hydraulic system

- ● Boom and arm flow regeneration
- ● Swing anti-rebound valves
- ● Spare ports (valve)
- ● Flow and pressure adjustment for auxiliary lines from the cab
- ● One-touch power boost function
- ● Smart Power Control (SPC3)
- ● Cylinder cushioning & contamination seals
- ● Reversible fan
- ○ 2 way auxiliary hydraulic line and breaker piping (pedal & joystick controlled)

Cab & Interior

- ● Pressurised, sound-insulated and CabSus mounted cab
- ● Heated, adjustable air suspension seat with adjustable headrest and armrests
- ● Air conditioning with climate control
- ● Pull-up type front window with sun roller blind and removable lower front window
- ● Sliding left window
- ● Upper and lower windshield wipers
- ● Rain visor
- ● Rear window defroster switch
- ● Adjustable PPC wrist control levers for arm, boom, bucket and swing
- ● Travel pedals with hand levers
- ● Jog shuttle switch
- ● 8" color LCD touch-enabled gauge panel
- ● Attachment management system
- ● Engine speed (RPM) control dial
- ● Automatic travel speed
- ● 4 operating modes & 4 working modes
- ● Electric horn
- ● Ceiling light
- ● Cup holders
- ● Multiple storage compartments (e.g. document holder under seat)
- ● Storage area (tools, etc.)
- ● Hot and cool box
- ● Flat, spacious, easy-to-clean floor
- ● Anti-theft protection
- ● 12 V power socket and USB ports
- ● Serial communication port for laptop PC interface
- ● Remote radio ON/OFF switch
- ● Loudspeakers and connections for radio
- ● Integrated RADIO+MP3 (STEREO) with Bluetooth Streaming

Safety

- ● Boom and arm cylinder safety valves
- ● Overload warning device
- ● Large guard rails on upper structure and steps
- ● Rotating beacon
- ● Around View Camera 360°
- ● Punched metal anti-slip plates
- ● Hydraulic safety lock lever
- ● Safety glass
- ● Hammer for emergency escape
- ● Right and left rear-view mirrors
- ● Lockable fuel cap and covers
- ● Battery cut-off switch
- ● Engine restart prevention system
- ● Parking brake
- ● Full pack of LED lights
- ● Emergency engine stop switch and hydraulic pump control switch
- ● Keyless start (Smart key)
- ○ FOGS cab - top and front cab guards (ISO 10262)
- ○ Front window upper and lower guards

Other

- ● Boom: 7700 mm – arm: 3550 mm – counterweight: 10700 kg
- ● DEVELON Fleet Management Web Telematic system
- ● Auto shut-off fuel filler pump
- ● Double element air cleaner and pre-filtered Cyclone Turbo dust separator
- ● Fuel pre-filter with water separator sensor
- ● Dust screen for radiator/oil cooler
- ● 2 x Hydraulically-driven cooler fan
- ● Hydraulically-driven oil cooler fan
- ● Self-diagnostic function
- ● Alternator (28 V, 100 A) - Battery (2 × 12 V, 200 Ah)
- ● Hydrostatic 2-speed travel system with automatic shift
- ● Remote greasing for swing circle and work group pivot points
- ● Floating boom
- ● Automatic lubrication system
- ○ Booms: 6650 mm
- ○ Arms: 2600 mm, 2900 mm
- ○ Heavy-duty bottom cover
- ○ Develon buckets: full range of GP, HD & rock buckets
- ○ Hydraulic piping for quick-coupler
- ○ Additional filter for breaker piping
- ○ Double pump flow
- ○ Diesel heater
- ○ Straight travel pedal
- ○ Alarm for travel & swing

Undercarriage

- ● Hydraulic and spring track adjusters
- ● Normal track guards
- ● Greased and sealed track links
- ● 650 mm double grouser shoe
- ○ Full-length track guards
- ○ 750 mm, 900 mm double grouser shoe

Powered by **Innovation**

DISCOVER MORE:
DX800LC-7

DEVELON

DOOSAN Infracore Europe s.r.o.
IBC - Pobřežní 620/3, 186 00 Praha 8-Karlín
Czech Republic

©2023 DEVELON D4600761-EN (05-23)

Certain specification(s) are based on engineering calculations and are not actual measurements. Specification(s) are provided for comparison purposes only and are subject to change without notice.
Specification(s) for your individual Develon equipment will vary based on normal variations in design, manufacturing, operating conditions, and other factors. Pictures of Develon units may show other than standard equipment.