DEVELON

Wheeled Excavators

DX57W-7



Maximum power	42.5 kW
Operating weight	5.8 t
Bucket capacity	0.175 m^3

MINI EXCAVATOR WITH MAXIMUM PERFORMANCE

TOP PERFORMANCE IN A VERSATILE PACKAGE

- 360° rotation for better visibility & adaptability to any work site.
- Large hydraulic capacity of a tool carrier.
- Works in narrow spaces thanks to boom swing.
- Travels with unparalleled speed (up to 20 or 30 km/h depending on country regulations).

EFFICIENCY

Extra reach higher than 6 meters and huge lifting capacities thanks to front axle lock & balanced weight distribution.

COMFORT

One of the most spacious cabs in the market, with low noise & vibration levels and excellent all-round visibility. Extra-large door for easy access. Fully adjustable heated air suspension seat, air conditioning with climate control as standard.

POWER

The new Stage V engine, with DOC and DPF, is exceptionally powerful – with high torque at low revs.

SAFETY

New AVM (360°) camera with ultrasonic sensors

FRONT AXLE

Ram lock available for more stability & performance in handling or digging operations.





Efficient & safe: Excellent ground clearance for better protection in rough terrain.

CONTROLLABILITY

3 work & 3 power modes, proportional control, 7" user-friendly TFT LCD color monitor (adjustable position), 2 speeds (high, low + creep). Control of the boom swing from the joystick.

PRODUCTIVITY

Superior digging, pulling and traction forces.

EASY MAINTENANCE

Easy access to all compartments. Maintenance data directly available from control panel.

ADVANCED FILTRATION

Self-cleaning and maintenance-free Cyclonic air pre-cleaner is able to expel all types of mixed debris.

TOP PERFORMANCE AND FUEL EFFICIENCY

THE POWER TO RAISE PRODUCTIVITY

The DX57W-7 takes even the heaviest tasks in its stride with efficient, dependable performance that saves you time and money:

- Hydraulic system uses the engine's power more effectively, maximizing pump output and offering more comfort, smoothness and accuracy
- Greater fuel efficiency means you can keep costs down and reduce environmental impact

OPTIMIZED POWER MANAGEMENT

The DX57W-7 is equipped with a Develon D24 Stage V engine. Famous for excellent fuel efficiency, reliability and long service life, it combines exceptional power output and high torque at low revs. Diesel Oxidation Catalyst (DOC) and Diesel Particulate Filter (DPF) ensure compliance with Stage V regulations.



If the engine is the heart of the excavator, the e-EPOS is its brain – providing a perfectly synchronized communication link between the engine's ECU (Electronic Control Unit) and the hydraulic system. A CAN (Controller Area Network) system enables a constant flow of information between engine and hydraulic system, so that power is delivered exactly as needed.

EFFICIENT FUEL MANAGEMENT

- Choice between 3 power modes and 3 working modes guarantees optimum performance in all conditions
- Engine auto-shut-off: shuts down the engine after the machine has been idling for a specified time
- Electronic control of fuel consumption optimizes efficiency
- Auto-idle function saves fuel





EXCEPTIONAL COMFORT AND EASE OF CONTROL

THE IDEAL WORKSPACE – DESIGNED AROUND YOU

With one of the most spacious cabs in the market, the DX57W-7 is designed to provide you with the best possible working conditions. The ergonomic controls and the easy-to-view color monitor place the machine firmly in your hands.

BEST-IN-CLASS OPERATOR ENVIRONMENT

- Industry-leading engine saves on fuel and meets all noise regulations, providing exceptional operator comfort
- CabSus mount suspension system dampens high vibrations and provides outstanding protection against impact
- Fully adjustable steering column ensures optimal visibility
- Heated air suspension seat as standard
- Air conditioning with climate control

ISO-CERTIFIED SAFETY

The sophisticated state-of-the-art ROPS cab is pressurized and ISO-certified for your safety. Standard cab and boom lights (LED as an option), large side mirrors and rear-view camera improve all-round visibility (AVM 360° cameras and ultrasonic sensors as options). Other standard safety features include: automatic overheating alarm warning, low oil pressure sensor, engine emergency cut-off switch, overload warning device.

THE HIGHEST STANDARDS OF EFFICIENCY AT YOUR FINGERTIPS

Highly sensitive & low-effort joysticks and clear convenient controls enable you to work safely, smoothly & confidently with minimum effort. Proportional auxiliary flow means precision control, smoothness & efficiency when using attachments.

TFT LCD COLOR MONITOR PANEL

The upgraded 7" Thin-Film-Transistor LCD panel features a day and night display. The user-friendly monitor gives full access to machine settings and maintenance data. Any abnormality is clearly displayed on the screen, allowing you to work safely and confidently with an accurate overview of all conditions.

DYNAMIC POWER MANAGEMENT

- A one-touch deceleration button immediately reduces engine speed to low or idle
- Auto-idling starts 4 seconds after all controls are returned to neutral – reducing fuel consumption and noise levels in the cab

3 WORK MODES & 3 POWER MODES

Deliver the needed power for your specific application while minimizing fuel consumption:

- 1-way mode, 2-way mode and Digging mode
- Power mode, Standard mode and Economy mode





MORE DURABILITY – LESS MAINTENANCE

DEPENDABLE PERFORMANCE FOR LOW LIFETIME COST

Quality materials, the most advanced computer-aided design and endurance testing under the most demanding conditions ensure your excavator will keep on performing.

MAINTENANCE ACCESS MADE SIMPLE

- A battery cut-off switch makes it easy to disconnect the battery during long-term storage
- The hour meter display can be easily checked from ground level
- For extra accessibility and servicing convenience, all filters (engine oil filter, fuel pre-filter, fuel filter and pilot filter) are accessible from ground level. Engine parts can be easily reached via the rear bonnet.

ADVANCED PIN & BUSHING TECHNOLOGY

The boom and arm are connected with castle nut and split pin for a simple, robust, reliable system.

Highly lubricated metal is used for the boom pivot to increase the component's lifetime and lengthen greasing intervals. The bucket pivot features EM (Enhanced Macrosurface) bushings, which have a tailored surface pattern and self-lubricating coating to optimize greasing and make removal of debris more efficient. Ultra-hard wear-resistant discs & bucket pivot polymer shim increase durability even more.

ADVANCED FILTRATION

Cyclonic air pre-cleaner prevents the majority of heavier-than-air particles ingested through the engine's air intake from entering the engine. Self-cleaning and maintenance-free, the system is able to expel all types of mixed debris, including mud, snow, rain, leaves, sawdust, chaff, etc.

UNDERCARRIAGE DURABILITY

A rigid, welded frame provides excellent durability. Efficient routing of hydraulic lines, transmission and rear differential protection and heavy-duty axles make the undercarriage perfect for wheeled excavator applications. An oscillating axle lock is available.

STRENGTHENED BOOM & ARM

Finite Element Analysis has been used to calculate the best load distribution throughout the boom structure. Combined with thicker material, this means that element fatigue is limited and both reliability and component life are increased.

To better protect the base of the arm, reinforced bars have been added and the arm center and end boss have been strengthened.





TECHNICAL SPECIFICATIONS

ENGINE

Designed to deliver superior performance and fuel efficiency, the Develon D24 diesel engine fully meets latest Stage V emission regulations and is equipped with Diesel Oxidation Catalyst (DOC) and Diesel Particulate Filter (DPF).

Model

Develon D24

No. of cylinders

4

Rated power at 2400 rpm

SAE J1349 42.5 kW (52.3 hp)

Max. torque

20.6 kgf·m @ 1600 rpm

Idle (low - high)

1050 [±10] - 2400 [±25] rpm

Displacement

2392 cm³

Bore × stroke

90 mm × 94 mm

Starter

12 V / 2.5 kW

Batteries - Alternator

1 × 12 V, 100 Ah - 12 V, 90 A

Air filter

Double element air cleaner and pre-filtered dust separator

SWING MECHANISM

The swing mechanism uses an axial piston motor, driving a 2-stage planetary reduction gear bathed in oil for maximum torque.

- Swing bearing: single-row, shear type ball bearing with induction hardened internal gear
- Internal gear and pinion immersed in lubricant
- Increased swing torque reduces swing time
- The swing brake for parking is activated by spring and released hydraulically

Maximum swing speed

8.9 rpm

Maximum swing torque

1022 kgf·m

Swing drive

Axial piston motor

OPERATING WEIGHT

With 1.6 m arm and single tires

5.74 t

With 1.9 m arm and double tires

6.24 t

HYDRAULIC SYSTEM

The e-EPOS (Electronic Power Optimising System) is the brain of the excavator - minimising fuel consumption and optimising the efficiency of the hydraulic system for all working conditions.
To harmonise the operation of the engine and the hydraulics, the e-EPOS is connected to the engine's electronic control unit (ECU) via a data transfer link.

- The hydraulic system enables independent or combined operations
- 2 travel speeds offer either increased torque or high speed
- Cross-sensing pump system for fuel savings
- Auto-deceleration system
- 3 work modes, 3 power modes
- Computer-aided pump flow control

Main pump

Split, axial piston pump
Maximum flow at 2400 rpm 2 × 60 l/min

Pilot pump

Gear pump
Maximum flow at 2400 rpm 21.4 l/min

Steering pump

Gear pump
Maximum flow at 2400 rpm 38.9 l/min

Relief valve settings

Implement	240 kgf/cm²
Travel	270 kgf/cm²
Swing	230 kgf/cm²
Pilot	34 kgf/cm²

HYDRAULIC CYLINDERS

High-strength steel piston rods and cylinder bodies. Shock-absorbing mechanism fitted in all cylinders for shock-free operation and extended piston life.

Cylinders	Quantity	Bore × rod diameter × stroke (mm)
Boom	1	110 × 60 × 712
Arm	1	85 × 55 × 873
Bucket	1	80 × 50 × 600
Dozer	1	110 × 60 × 160
Stabilizers	2	75 × 75 × 100
Boom swing	1	95 × 50 × 558

TECHNICAL SPECIFICATIONS

CAB

The air-conditioning and heating systems are integrated for optimal climate control. An automatically controlled fan supplies the filtered cab air, which is distributed throughout the cab from multiple vents. The heated air suspension, adjustable operator's seat includes a seat belt. The operator can adjust the ergonomic seat and joystick console separately according to his preferences.

A-weighted emission sound pressure level at the operator's position, LpAd (ISO 6396:2008)

74 dB(A)

A-weighted sound power level, LwAd (2000/14/EC)

Declared: 98 dB(A)
Measured: 97 dB(A)

DRIVE

The wheels are driven by an axial piston motor via a 2 speed (low, high) transmission. In addition to the two-speed powershift transmission, there is also an economy mode and a switch for the creep speed. Selection is made on the Travel Selector Switch. Two travel speed ranges offer a choice between increased torque or high speed.

Travel speed (low - high)

10 - 30 km/h

Maximum traction

3.3 t

Minimum turning radius

4.85 m

Maximum gradeability

35° / 70%

Oscillating angle

± 5°

BRAKES

Dual multi-disc circuit with sintered metal discs for extended service life. Braking system activated by a pump and accumulator circuits. Spring-applied, hydraulically released parking brake mounted on the transmission shaft.

FLUID CAPACITIES

Fuel tank	118 l
Hydraulic system	95 l
Cooling system	10.8 l
Engine oil	9.2 l
Front axle hub	2 × 0.4 l
Rear axle hub	2 × 0.4 l
Front axle case	5.1 l
Rear axle case	4.6 l
Transmission	1.5 l

DIGGING FORCES

Bucket digging force (ISO)

4.2 t

Arm digging force (ISO)

1.6 m arm	2.8 t
1.9 m arm	2.5 t

BUCKETS

Bucket Type	Capacity (m³) SAE	Width (mm)		Weight (kg)	1.6 m arm	1.9 m arm
		W/O side cutters	With side cutters			
Standard	0.175	654	724	141	A	A
Option	0.19	714	784	149	A	A
Option	0.07	300	362	97	A	A

A: Suitable for materials with a density less than or equal to 2100 kg/m³
B : Suitable for materials with a density less than or equal to 1800 kg/m³
C: Suitable for materials with a density less than or equal to 1500 kg/m³
D: Suitable for materials with a density less than or equal to 1200 kg/m³
Based on ISO 10567 and SAE J296, arm length without quick-coupler. For reference only.

COMPONENT WEIGHTS

Item	Unit	Weight	Remarks
Upper structure	kg	2797	Without front assembly and counterweight
Undercarriage	kg	2040	With swing bearing, boom swing bracket, single tires
Front assembly	kg	829	With 1.6 m arm
Counterweight	kg	246	
One-piece boom	kg	248	
1.6 m arm	kg	117	
1.9 m arm	kg	140	
Dozer	kg	225	1920 mm (with cover 24 kg)

DIMENSIONS & WORKING RANGE

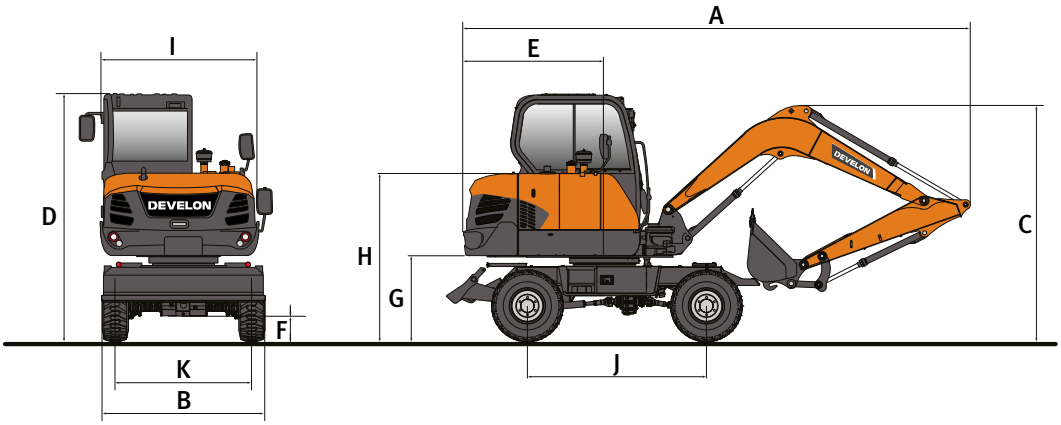

DIMENSIONS

	Unit	DX57W-7	
Boom length	**mm**	**3000**	
Arm length	**mm**	**1600**	**1900**
Tires	**-**	**Single**	**Double**
A Shipping length	mm	5896	5971
B Shipping width	mm	1947	2290
C Shipping height (boom)	mm	3633	3638
D Height over cab	mm	2861	2861
E Tail swing radius	mm	1650	1650
F Minimum ground clearance	mm	270	270
G Upper structure ground clearance	mm	980	980
H Engine cover height	mm	1941	1941
I Upper structure width	mm	1853	1853
J Wheel base	mm	2100	2100
K Tread width	mm	1600	1780

WORKING RANGE

	Unit	DX57W-7	
Boom length	**mm**	**3000**	
Arm length	**mm**	**1600**	**1900**
A Max. digging reach	mm	6108	6400
B Max. digging reach (ground)	mm	5888	6190
C Max. digging depth	mm	3495	3795
D Max. dumping height	mm	4324	4510
E Min. swing radius	mm	2448	2464
F Max. digging height	mm	5976	6170
G Max. bucket pin height	mm	5150	5339
H Max. vertical wall depth	mm	2805	3115
I Max. radius vertical	mm	3873	3928
J Max. digging depth (8´level)	mm	3084	3427
Boom swing angle (left/right)	°	80/50	80/50

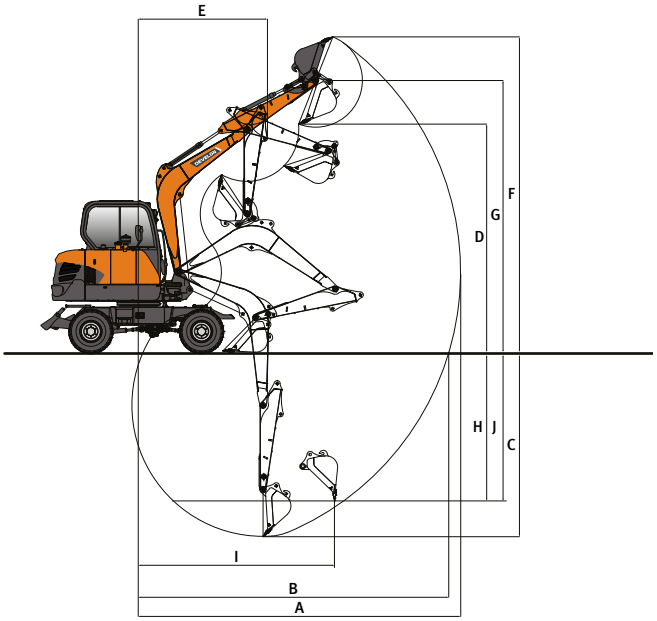

LIFTING CAPACITIES

DOZER UP – FRONT • W/O BUCKET

(UNIT: 1000 KG)

A	1.0 m		2.0 m		3.0 m		4.0 m		5.0 m		Max. reach		
B													A
Boom 3.0 m • Arm 1.6 m • Double tires • Counterweight 246 kg													
5.0 m											1.20*	1.20*	3.57
4.0 m							1.21*	1.21*			1.04*	1.04*	4.47
3.0 m							1.35*	1.35*			1.00*	0.98	4.97
2.0 m					2.22*	2.02	1.65*	1.33	1.42	0.96	1.02*	0.90	5.20
1.0 m					2.88*	1.92	1.95	1.28	1.40	0.94	1.11*	0.89	5.19
0.0 m			2.19*	2.19*	3.02	1.87	1.91	1.25			1.29*	0.94	4.95
-1.0 m	2.93*	2.93*	3.95*	3.67	3.01	1.87	1.91	1.25			1.64	1.09	4.44
-2.0 m			4.00*	3.74	2.46*	1.91					1.92*	1.53	3.50

DOZER UP – REAR • W/O BUCKET

Boom 3.0 m • Arm 1.6 m • Double tires • Counterweight 246 kg

5.0 m											1.20*	1.20*	3.57
4.0 m							1.21*	1.21*			1.04*	1.04*	4.47
3.0 m							1.35*	1.35*			0.99	0.98	4.97
2.0 m					2.04	2.02	1.34	1.33	0.96	0.96	0.91	0.90	5.20
1.0 m					1.93	1.92	1.29	1.28	0.94	0.94	0.89	0.89	5.19
0.0 m			2.19*	2.19*	1.89	1.87	1.26	1.25			0.94	0.94	4.95
-1.0 m	2.93*	2.93*	3.72	3.67	1.89	1.87	1.25	1.25			1.09	1.09	4.44
-2.0 m			3.79	3.74	1.93	1.91					1.55	1.53	3.50

DOZER UP – FRONT • W/O BUCKET

Boom 3.0 m • Arm 1.9 m • Double tires • Counterweight 246 kg

5.0 m							1.00*	1.00*			0.99*	0.99*	4.01
4.0 m							1.04*	1.04*			0.87*	0.87*	4.82
3.0 m							1.20*	1.20*	1.23*	0.98	0.84*	0.84*	5.28
2.0 m					1.96*	1.96*	1.51*	1.33	1.35*	0.96	0.86*	0.83	5.49
1.0 m					2.70*	1.93	1.85*	1.28	1.40	0.93	0.93*	0.82	5.48
0.0 m			2.11*	2.11*	3.01	1.87	1.91	1.24	1.38	0.92	1.06*	0.85	5.26
-1.0 m	2.49*	2.49*	3.47*	3.47*	3.00	1.86	1.90	1.23			1.34*	0.97	4.79
-2.0 m	3.82*	3.82*	4.47*	3.69	2.70*	1.88					1.77*	1.28	3.96

DOZER UP – REAR • W/O BUCKET

Boom 3.0 m • Arm 1.9 m • Double tires • Counterweight 246 kg

5.0 m							1.00*	1.00*			0.99*	0.99*	4.01
4.0 m							1.04*	1.04*			0.87*	0.87*	4.82
3.0 m							1.20*	1.20*	0.98	0.98	0.84*	0.84*	5.28
2.0 m					1.96*	1.96*	1.34	1.33	0.96	0.96	0.83	0.83	5.49
1.0 m					1.95	1.93	1.29	1.28	0.94	0.93	0.82	0.82	5.48
0.0 m			2.11*	2.11*	1.89	1.87	1.25	1.24	0.92	0.92	0.86	0.85	5.26
-1.0 m	2.49*	2.49*	3.47*	3.47*	1.87	1.86	1.24	1.23			0.98	0.97	4.79
-2.0 m	3.82*	3.82*	3.74	3.69	1.90	1.88					1.29	1.28	3.96

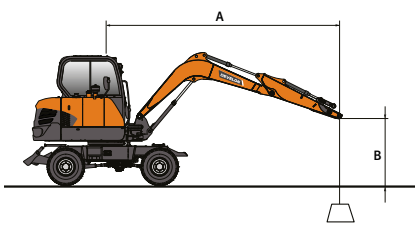

: Rating over front.
: Rating over side or 360°.

1. Lifting capacities are in compliance with ISO 10567:2007(E).
2. The load point is at the end of the arm.
3. * = The nominal loads are based on hydraulic capacity.
4. The nominal loads shown do not exceed 75% of tipping loads or 87% of hydraulic lifting capacity.
5. For lifting capacity with bucket, simply subtract the actual weight of the bucket from the values.
6. The configurations indicated do not necessarily reflect the standard equipment of the machine.

STANDARD AND OPTIONAL EQUIPMENT

● Standard ○ Optional

Engine

- ● Develon D24, Stage V compliant, with DOC and DPF
- ● Auto-idle function

Hydraulic system

- ● Boom and arm flow regeneration
- ● Swing anti-rebound valves
- ● Spare ports (valve)
- ● Breaker piping 2-ways
- ● Cylinder cushioning & contamination seals

Cab & Interior

- ● Sound-insulated and CabSus mounted cab
- ● Heated, adjustable air suspension seat with adjustable headrest and armrest
- ● Air conditioning with climate control
- ● Pull-up type front window with sun roller blind and removable lower front window
- ● Sliding left & right window
- ● Intermittent windshield wiper
- ● Rear window defroster switch
- ● Adjustable PPC wrist control levers for arm, boom, bucket and swing
- ● Joysticks and pedal provide proportional control of auxiliary lines for attachments
- ● Adjustable tiltable steering column
- ● Jog shuttle switch
- ● 7" (18 cm) TFT LCD color monitor panel
- ● Attachment management system
- ● Engine speed (RPM) control dial
- ● Automatic travel speed
- ● 3 power modes & 3 work modes
- ● Electric horn
- ● Cigarette lighter
- ● Ceiling light
- ● Cup holder
- ● Multiple storage compartments (e.g. document holder under seat)
- ● Storage area (tools, etc.)
- ● Hot and cool box
- ● Flat, spacious, easy-to-clean floor
- ● Master key
- ● Anti-theft protection
- ● 12 V spare power socket
- ● Serial communication port for laptop PC interface
- ● Remote radio ON/OFF switch
- ● Radio with Bluetooth

Safety

- ● Roll Over Protective Structure (ROPS)
- ● Boom and arm cylinder safety valves
- ● Overload warning device (OWD)
- ● Rotating beacon
- ● Rear-view camera
- ● Hydraulic safety lock lever
- ● Safety glass
- ● Hammer for emergency escape
- ● Right and left rear-view mirrors
- ● Lockable fuel cap and covers
- ● Battery cut-off switch
- ● Engine restart prevention system
- ● Parking brake
- ● Work lights (2 front frame, 1 front cab-mounted, 1 rear cab-mounted, 2 boom-mounted)
- ○ LED additional worklamp
- ○ LED type mono boom lamp
- ○ 360° view camera
- ○ Ultrasonic sensors

Other

- ● Boom: 3000 mm – arm: 1600 mm – counterweight: 246 kg
- ● Auto shut-off fuel filler pump
- ● Air cleaner and pre-filtered Cyclone Turbo dust separator
- ● Fuel pre-filter with water separator sensor
- ● Screen for radiator/oil cooler
- ● Self-diagnostic function
- ● Alternator (12 V, 90 A) - Battery (12 V, 100 Ah)
- ● 2-speed travel system
- ● Remote greasing for swing circle and work group pivot points
- ● Guards for work lights
- ○ 1900 mm arm
- ○ Rotating piping (Pero)
- ○ Clamshell piping
- ○ Quick coupler piping
- ○ Road homologation (depending on countries)

Undercarriage

- ● Rear dozer blade and front cradle
- ● Single tires 12-16.5-12PR
- ● Front axle oscillation lock modes (On/Off/Auto)
- ● Lockable toolbox
- ● Rear & front chain tightening eyes
- ○ Double tires 8.25-15, 14 PR

Powered by **Innovation**

DISCOVER MORE:
DX57W-7

DEVELON

DOOSAN Infracore Europe s.r.o.
IBC - Pobřežní 620/3, 186 00 Praha 8-Karlín
Czech Republic

©2023 DEVELON DD4600741-EN (04-23)

Certain specification(s) are based on engineering calculations and are not actual measurements. Specification(s) are provided for comparison purposes only and are subject to change without notice.
Specification(s) for your individual Develon equipment will vary based on normal variations in design, manufacturing, operating conditions, and other factors. Pictures of Develon units may show other than standard equipment.