DEVELON

Mini Excavators

DX50Z
DX55R



	DX50Z	DX55R
Maximum power	36.4 kW	36.4 kW
Operating weight	5438 kg	5740 kg
Bucket capacity	0.16 m^3	0.16 m^3

DEVELON DX50Z AND DX55R CRAWLER EXCAVATOR:

MEET THE NEW GENERATION OF DEVELON MACHINES

Lift your business to the next level with the DX50Z and DX55R Develon excavators.

Exceptionally powerful, yet environmentally friendly, the DX50Z and DX55R excavators feature extraordinary fuel efficiency.

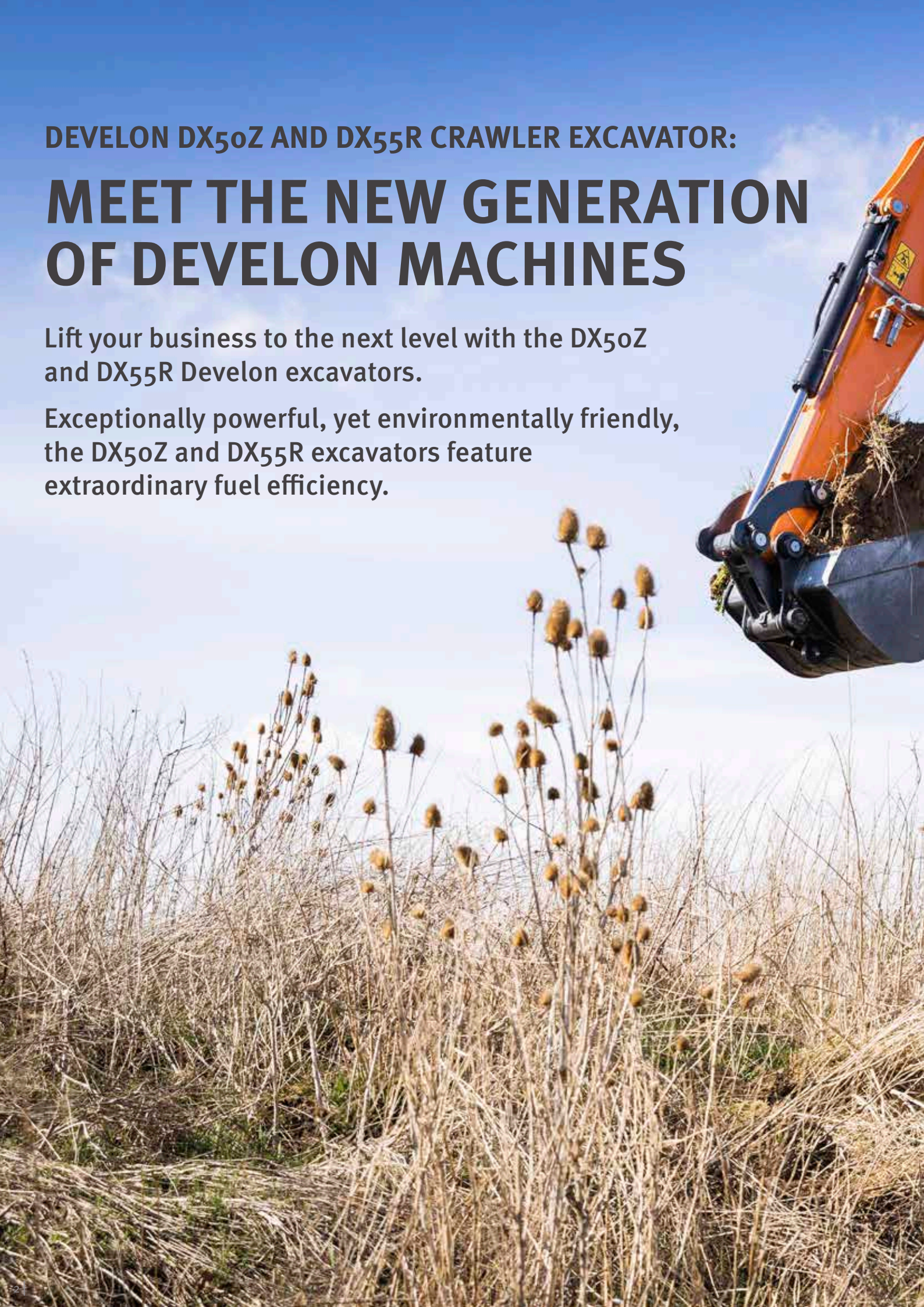


DEVELON
DX 55R

RAISE PROFITS, PRODUCTIVITY & FUEL EFFICIENCY

TOP PERFORMANCE IN A VERSATILE PACKAGE

- A compact & powerful machine for the best adaptability to any work site.
- Large hydraulic capacity of a tool carrier.
- Works in narrow spaces thanks an ultra-compact design and boom swing.

EFFICIENCY

The new DX50Z and DX55R offer really high level of efficiency, in any application, thanks to a brand new design. The DX50Z offers the best compactness in the market, where the DX55R offers the best compromise between compacity and lifting performance, when heavy lifting is needed.

CONTROLLABILITY

- Smooth and precise hydraulic offering high to drive all attachment needed on the jobsite.
- Operator can proportionally control flow rate.
- 2 Travel speeds with automatic autoshift.
- Foldable travel pedals can utilize a wide range of foot space when not using pedals.
- Control of the boom swing from the joystick.



POWER

The new Stage V engine, with DOC and DPF, is exceptionally powerful – with high torque at low revs.



EASY MAINTENANCE

- Easy access from ground level to all components, filters and refilling points.
- The DX50Z-7 was designed to be easy to keep on the job.
- Offers easy access to filters, fluids and all service points — including the engine, pump package, valve bank, cooling system and plumbing.
- Quick and easy machine diagnosis allows you to monitor critical systems in real time from the LCD monitor in the cab.

PRODUCTIVITY

Superior digging, pulling and traction forces to face all jobsites.

SAFETY

- Rear View Camera (optional)
- Powerful LED lights and full visibility on the job site with large glass door
- Boom & Arm Lock Valve
- ROPS Cabin
- OPG Guard (optional)
- Lock Valve on the dozer blade (optional)

COMFORT

- One of the most spacious cabs in the market, with low noise & vibration levels and excellent all-round visibility.
- Large glass door for easy access and better visibility.
- Fully adjustable heated air suspension seat, air conditioning with climate control as standard.



DEVELON DX50Z/DX55R HIGH-PERFORMANCE HYDRAULIC EXCAVATOR

Offers a host of redesigned features and new technologies to ensure smooth operation, superior productivity and stability, top-class operator comfort and improved fuel efficiency. This powerful machine will give your job site a huge boost.

ALL-ROUND VERSATILITY AND IMPROVED FUEL EFFICIENCY

A MODEL WITH NOVEL FEATURES

Developed with the concept of 'providing optimum value to the end-user', the DX50Z (zero tail swing)/DX55R (reduced tail swing) hydraulic excavator offers additional value to the operator. In concrete terms, this translates into:

- Increased production and improved fuel economy achieved with an electronic control for the hydraulic system and for the engine
- Improved ergonomics, increased comfort and excellent all-round visibility, ensuring a safe and pleasant working environment
- Improved reliability, using high-performance materials - combined with new methods of structural stress analysis - have increased component life expectancy, thus reducing running costs
- Reduced maintenance increases the excavator's availability and lowers the operating costs

GUARANTEED HIGHEST PERFORMANCE IN ANY WORK ENVIRONMENT

The advanced hydraulic system, combined with a powerful engine, provides the biggest digging and tractive forces for efficient operation. As a result, the DX50Z/DX55R provides outstanding performance, work efficiency and the ability to adapt to any work environment.

DEVELON D18 ENGINE

The DX50Z/DX55R has a powerful and eco-friendly heart, always providing high operating efficiency and pleasant working conditions.

BOOM SWING

The boom swing function allows you to work in very narrow areas.

POWERFUL DIGGING FORCE (BUCKET)

Powerful, efficient, and with increased digging force can face every job site condition.

DOZER BLADE

Welded, unitized blade provides durability even under harsh working conditions. Automatically controlled blade floating for quick and easy leveling operations.

SECOND SPEED AND AUTO-SHIFT

The travel motors automatically return to high speed after downshifting under load. This allows smoother turns and easier dozing work.





1. Seat
2. Arm rest
3. Engine emergency stop switch
4. Left-hand work lever (joystick)
5. Boom swing pedal (if equipped)
6. Travel pedal
7. One/two-way pedal (if equipped)
8. Foot vent
9. Defroster vent
10. Travel lever
11. Display monitor
12. Right-hand work lever (joystick)
13. Dozer lever
14. Seat belt
15. Safety lever
16. Aftertreatment system switch
17. Starter switch
18. Quick coupler switch



THE IDEAL WORKSPACE – DESIGNED AROUND YOU

THE CABIN HAS BEEN ERGONOMICALLY DESIGNED WITH COMFORT IN MIND

The DX50Z & DX55R are designed to provide you with the best possible working conditions. The sophisticated pressurised ROPS cab is ISO-certified for your safety. Its spacious interior offers a fully adjustable and comfortable seat. Comfortably seated, you have easy access to several storage compartments and a clear all-round view of the worksite. Noise and vibration levels are reduced while air conditioning allows you to maximise your productivity and return on investment.

MORE DURABILITY – LESS MAINTENANCE

A reinforced chassis provides strength, while the optimised boom shape ensures uniform load distribution for more durability. Top quality materials, the most advanced computer-aided design and endurance testing under the most demanding conditions ensure your excavator will keep on performing.
The DX50Z & DX55R are designed for low maintenance with longer intervals resulting in more machine availability on site while skilled Develon-trained technicians are available to provide extra support when needed.



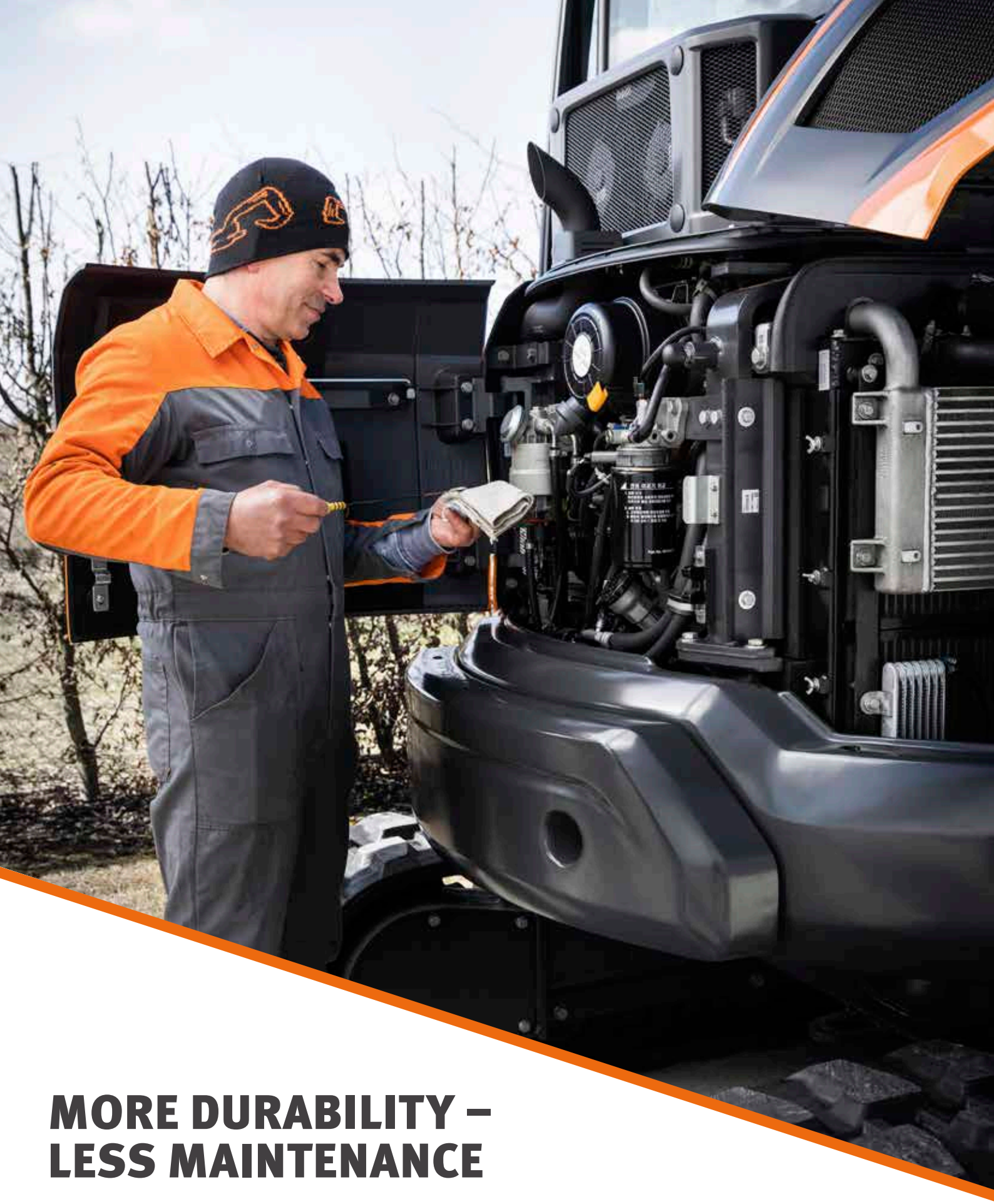

MORE DURABILITY – LESS MAINTENANCE

The most advanced technology developed by Develon Infracore Co., Ltd. was integrated into the DX50Z-7 & DX55R-7 excavators for powerful performance and simple, easy maintenance. This provides the operator with convenient maintenance check points and maximizes the DX50Z-7 & DX55R-7's work efficiency.

BEST MAINTENANCE ACCESS

MAINTENANCE ACCESS MADE SIMPLE

- A battery cut-off switch makes it easy to disconnect the battery during long-term storage
- The hour meter display can be easily checked from ground level
- For extra accessibility and servicing convenience, all filters (engine oil filter, fuel pre-filter, fuel filter and pilot filter) are accessible from ground level.

AIR BREATHER

The hydraulic system was designed to prevent the pump from cavitating.

STRENGTHENED BOOM

Using finite elements and 3-dimensional computer simulation, the shape of the boom has been optimally designed for better load distribution throughout the structure. This enhancement, combined with increased material thickness, limit element fatigue for improved durability and reliability.

ARM ASSEMBLY

In the arm assembly greater strength is gained by using cast elements and reinforcement around the bosses to increase the life of the component.

RUBBER TRACKS

The rubber tracks offer greater non-slip and grip capabilities, and are less harmful to sidewalks and road surfaces in urban environments. These rubber shoes can be easily installed or removed with the idler, sprocket and other main parts.

ENGINE ROOM

The engine compartment is designed for easier service, and the sturdy sound-proofing inside the engine cover reduces the noise to provide a more comfortable environment for the operator and those working around the machine.

OIL GAUGE

Hydraulic oil level can be easily checked through the gauge on the side of the hydraulic tank.

GREASE PIPING

Integrated grease piping is designed for easy maintenance of the swing bearing and boom swing cylinder.

EXTERNAL FUEL CAP

The external lockable fuel cap makes refueling easy and safe. For extra convenience, a warning beep sounds when the maximum fuel level has been reached.



TECHNICAL SPECIFICATIONS

ENGINE

Designed to deliver superior performance and fuel efficiency, the Develon D18 diesel engine fully meets the latest Stage V emission regulations. To optimize machine performance, the engine uses high-pressure fuel injectors, air-to-air inter-cooler and electronic engine controls. 4-Cycle Water-Cooled, Wastegate Turbocharged, Diesel Oxidation Catalyst (DOC), Diesel Particulate Filter (DPF) and EGR.

Model

Develon D18

No. of cylinders

3

Rated power at 2200 rpm

SAE J1995 36.4 kW (48.8 hp)

Max. torque at 1600 rpm

18.4 kgf·m

Idle (low - high)

1150 - 2000 rpm

Displacement

1800 cm³

Bore × stroke

90 mm × 94 mm

Starter

12 V / 2.7 kW

Batteries - Alternator

1 × 12 V, 100 Ah – 12 V, 90 A

Air filter

Double element air cleaner

HYDRAULIC SYSTEM

The e-EPOS (Electronic Power Optimising System) is the brain of the excavator – minimising fuel consumption and optimizing the efficiency of the hydraulic system for all working conditions.
To harmonize the operation of the engine and the hydraulics, the e-EPOS is connected to the engine's electronic control unit (ECU) via a data transfer link.

- 2 travel speeds offer either increased torque or high speed
- Cross-sensing pump system for fuel savings
- Auto-deceleration system
- 4 operating modes, 4 power modes
- Flow and pressure control of auxiliary hydraulic circuits from control panel
- Computer-aided pump flow control

Main pump

Variable axial piston pump
Maximum flow at 2200 rpm 138.6 l/min

	Relief valve settings	
	DX50Z	DX55R
Implement	250 kgf/cm²	280 kgf/cm²
Travel	250 kgf/cm²	280 kgf/cm²
Swing	220 kgf/cm²	

UNDERCARRIAGE

Extremely robust construction throughout - made of high-quality, durable materials, with all welded structures designed to limit stresses.

- Track rollers lubricated for life
- Idlers and sprockets fitted with floating seals
- Track shoes made of induction-hardened alloy with triple grouser *
- Heat-treated connecting pins
- Hydraulic track adjuster with shock-absorbing tension mechanism

Upper rollers (standard shoe)

1

Lower rollers

4

Number of links & shoes per side *

39

Link pitch *

135 mm

* for steel track option

HYDRAULIC CYLINDERS

High-strength steel piston rods and cylinder bodies. Shock-absorbing mechanism fitted in all cylinders for shock-free operation and extended piston life.

Cylinders	Quantity	Bore × rod diameter × stroke (mm)
Boom	1	95 × 55 × 678
Arm	1	80 × 55 × 726
Bucket	1	70 × 45 × 600
Dozer	1	110 × 60 × 197
Boom swing	1	95 × 60 × 449

CAB

The air-conditioning and heating systems are integrated for optimal climate control. An automatically-controlled fan supplies the pressurized and filtered cab air, which is distributed throughout the cab from multiple vents.
The heated air suspension, adjustable operator's seat includes a seat belt. The operator can adjust the ergonomic seat and joystick console separately according to his preferences.

A-weighted emission sound pressure level at the operator's position, LpAd (ISO 6396:2008)

Declared: 78 dB(A)

A-weighted sound power level, LwAd (2000/14/EC)

Declared: 97 dB(A)
Measured: 96 dB(A)

FLUID CAPACITIES

Fuel tank	78 l
Cooling system (radiator)	10.8 l
Hydraulic oil tank	67 l
Engine oil	9.2 l
Travel device	2 × 0.9 l

SWING MECHANISM

The swing mechanism uses an axial piston motor, driving a 2-stage planetary reduction gear bathed in oil for maximum torque.

- Swing bearing: single-row, shear type ball bearing with induction hardened internal gear
- Internal gear and pinion immersed in lubricant

Maximum swing speed

9.8 rpm

Maximum swing torque

1380 kgf·m

DRIVE

Each track is driven by an independent, high-torque axial piston motor through a planetary reduction gearbox. Two levers / foot pedals guarantee smooth travel with counter-rotation on demand. The track frame protects the travel motor, brake and planetary gears. The multi-disc track brakes are spring-applied and hydraulic released.

Travel speed (low - high)

2.6 - 4.4 km/h

Maximum traction

4.58 t

Maximum gradeability

35° / 70%

WEIGHT & GROUND PRESSURE

	Machine weight (kg)		Ground pressure (kgf/cm²)	
	DX50Z	DX55R	DX50Z	DX55R
400 mm rubber shoes	5438	5740	0.30	0.32
400 mm steel tracks	5607	5908	0.31	0.33


DEVELON
DX 55R

TECHNICAL SPECIFICATIONS

COMPONENT WEIGHTS

Item	Weight (kg)		Remarks
	DX50Z	DX55R	
Upper structure without front	2494	2496	Without counterweight
Counterweight	270	550	
Lower structure assembly	1914	1914	Rubber
Front assembly	753	774	
Boom assembly	220	220	
Arm assembly	105	115	
Bucket	130	130	
Boom cylinder	61	62	
Arm cylinder	51.5	55.6	
Bucket cylinder	32	33.5	
Dozer	254	254	
Dozer cylinder	36	36	

ARMS

	Length (mm)	Weight (kg)	Digging forces (ISO)
DX50Z (Standard)	1450	117.4	2.35
DX55R (Standard)	1600	119	2.79

BUCKETS

	Capacity (m^3) SAE	Width (mm)		Weight (kg)	Digging forces (ISO)
		With side cutters	W/O side cutters		
DX50Z (Standard)	0.16	669	627	130	3.45
DX55R (Standard)					4.43

DIMENSIONS

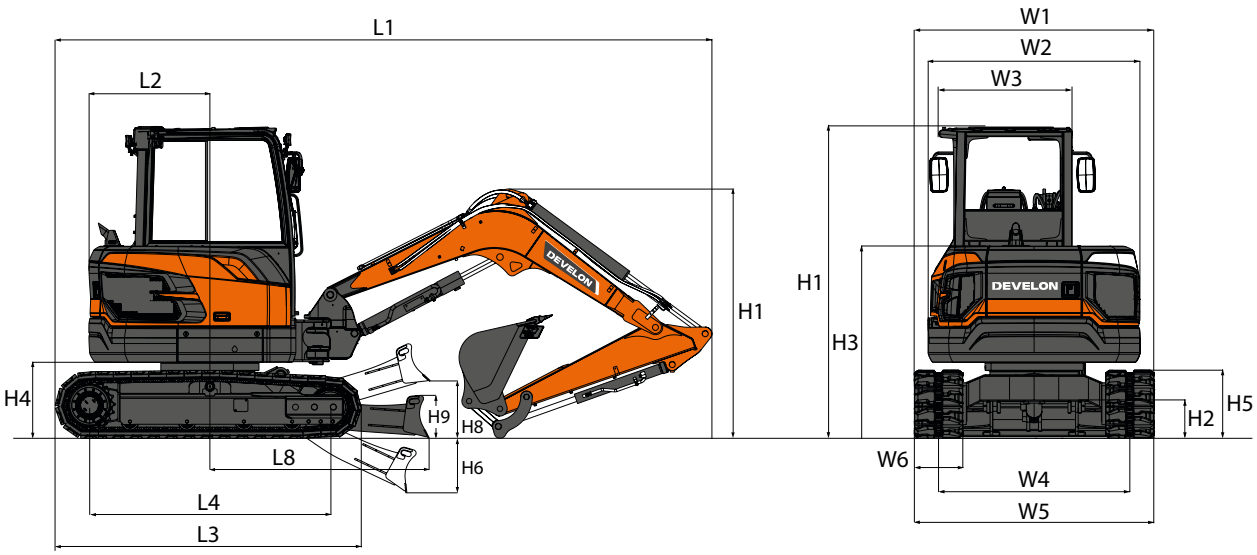

DIMENSIONS

			Unit	DX50Z	DX55R
Boom length			**mm**	**2700**	**2700**
Arm length			**mm**	**1450**	**1600**
Bucket capacity			**m³**	**0.16**	**0.16**
Undercarriage (track + grouser)			**-**	**Rubber**	**Rubber**
L1	Overall length		mm	5386	5400
H1	Overall height	Boom	mm	2060	2137
		Cab	mm	2575	2575
W1	Overall width		mm	1980	1980
R1	Rear swing radius		mm	1000	1050
H2	Ground clearance		mm	209.5	209.5
W2	House width		mm	1750	1750
W3	Cab width		mm	1150	1150
H3	Height over cover		mm	1588	1588
H4	Counterweight clearance		mm	628	628
A1/A2	Boom swing angle (left/right)		mm	60/53	60/53
H5	Track height		mm	562	562
L3	Track length		mm	2497	2497
L4	Tumbler distance		mm	1990	1990
W4	Track gauge		mm	1580	1580
W5	Undercarriage width		mm	1980	1980
W6	Shoe width		mm	400	400
etc.	Grouser height		mm	14	14
H6	Dozer digging depth		mm	450	450
H8	Dozer lift clearance		mm	470	470
H9	Dozer blade height		mm	349	349
L8	Distance to dozer end		mm	1811	1811

WORKING RANGE

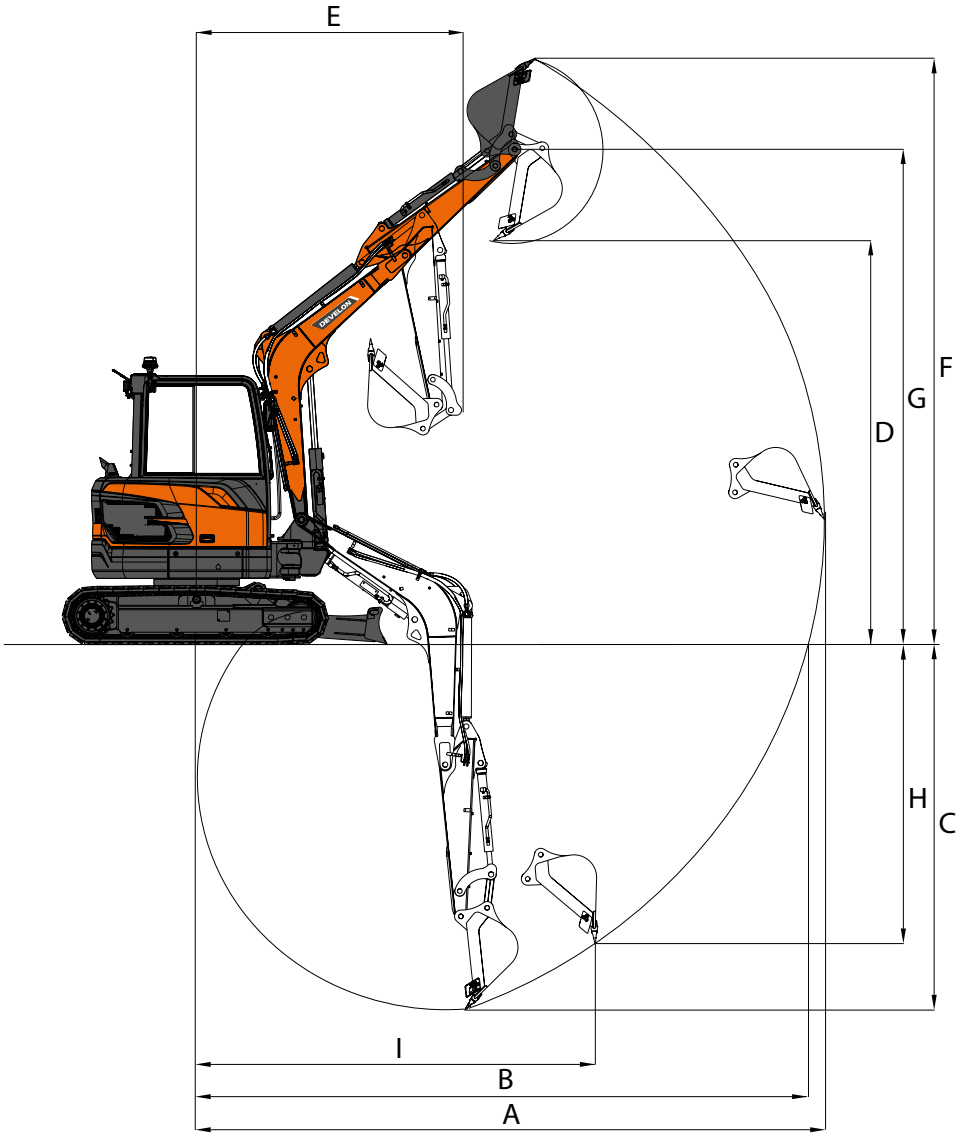

WORKING RANGE

		Unit	DX50Z	DX55R
Boom length		**mm**	**2700**	**2700**
Arm length		**mm**	**1450**	**1600**
Bucket capacity		**m³**	**0.16**	**0.16**
A	Max. digging reach	mm	5945	6090
B	Max. digging reach (ground)	mm	5800	5950
C	Max. digging depth	mm	3480	3630
D	Max. dumping height	mm	3820	3925
E	Min. swing radius	mm	2520	2550
F	Max. digging height	mm	5575	5680
G	Max. bucket pin height	mm	4710	4815
H	Max. vertical wall depth	mm	3140	3285
I	Max. radius vertical	mm	3390	3430

LIFTING CAPACITIES

DX50Z-7 • MONO BOOM • W/O BUCKET

(UNIT: 1000 KG)

A	1.0 m		2.0 m		3.0 m		4.0 m		5.0 m		Max. reach		
B													A
Mono boom 2.70 m • Arm 1.45 m • Shoe 400 mm • Dozer up													
4.0 m											0.82 *	0.82 *	3.93
3.0 m							0.95	0.86			0.72 *	0.66	4.64
2.0 m					1.45	1.3	0.91	0.83			0.63	0.58	4.98
1.0 m					1.34	1.19	0.87	0.79	0.61	0.56	0.6	0.55	5.05
0.0 m					1.28	1.14	0.84	0.76			0.63	0.57	4.88
-1.0 m	2.34 *	2.34 *	2.67	2.27	1.28	1.14	0.83	0.75			0.73	0.66	4.42
-2.0 m			2.75	2.33	1.32	1.18					1.05	0.94	3.51
Mono boom 2.70 m • Arm 1.45 m • Shoe 400 mm • Dozer down													
4.0 m											0.82 *	0.82 *	3.93
3.0 m							0.95	0.86			0.72 *	0.66	4.64
2.0 m					1.45	1.3	0.91	0.83			0.63	0.58	4.98
1.0 m					1.34	1.19	0.87	0.79	0.61	0.56	0.6	0.55	5.05
0.0 m					1.28	1.14	0.84	0.76			0.63	0.57	4.88
-1.0 m	2.34 *	2.34 *	2.67	2.27	1.28	1.14	0.83	0.75			0.73	0.66	4.42
-2.0 m			2.75	2.33	1.32	1.18					1.05	0.94	3.51

DX55R-7 • MONO BOOM • W/O BUCKET

(UNIT: 1000 KG)

A	1.0 m		2.0 m		3.0 m		4.0 m		5.0 m		Max. reach		
B													A
Mono boom 2.70 m • Arm 1.6 m • Shoe 400 mm • Dozer up													
4.0 m							1.08	0.98			1.01	0.92	4.13
3.0 m							1.08	0.98			0.78	0.71	4.80
2.0 m					1.65	1.48	1.04	0.94	0.72	0.66	0.69	0.63	5.12
1.0 m					1.53	1.36	0.99	0.89	0.7	0.64	0.66	0.6	5.20
0.0 m					1.46	1.3	0.95	0.86	0.69	0.63	0.68	0.62	5.03
-1.0 m	2.67 *	2.67 *	3.01	2.55	1.45	1.29	0.94	0.85			0.78	0.71	4.59
-2.0 m			3.08	2.61	1.48	1.32					1.07	0.97	3.73
Mono boom 2.70 m • Arm 1.6 m • Shoe 400 mm • Dozer down													
4.0 m							1.16 *	0.98			1.03 *	0.92	4.13
3.0 m							1.13 *	0.98			0.93 *	0.71	4.80
2.0 m					1.69 *	1.48	1.35 *	0.94	1.23 *	0.66	0.91 *	0.63	5.12
1.0 m					2.44 *	1.36	1.63 *	0.89	1.32 *	0.64	0.96 *	0.6	5.20
0.0 m					2.78 *	1.3	1.82 *	0.86	1.31 *	0.63	1.08 *	0.62	5.03
-1.0 m	2.67 *	2.67 *	3.47 *	2.55	2.70 *	1.29	1.78 *	0.85			1.36 *	0.71	4.59
-2.0 m			3.66 *	2.61	2.14 *	1.32					1.42 *	0.97	3.73
Mono boom 2.70 m • Arm 1.9 m • Shoe 400 mm • CW 550 kg + 200 kg • Dozer down													
4.0 m											1.07 *	1.07 *	3.39
4.0 m							0.95 *	0.95 *			0.83 *	0.83 *	4.51
3.0 m							0.97 *	0.97 *	1.07 *	0.73	0.75 *	0.7	5.11
2.0 m					1.41 *	1.41 *	1.20 *	1.03	1.12 *	0.72	0.74 *	0.63	5.42
1.0 m					2.21 *	1.5	1.51 *	0.98	1.24 *	0.7	0.77 *	0.6	5.49
0.0 m			1.79 *	1.79 *	2.69 *	1.42	1.75 *	0.94	1.33 *	0.68	0.86 *	0.62	5.33
-1.0 m	2.28 *	2.28 *	3.08 *	2.74	2.74 *	1.39	1.80 *	0.92			1.05 *	0.69	4.92
-2.0 m	3.53 *	3.53 *	4.19 *	2.8	2.35 *	1.41	1.48 *	0.93			1.33 *	0.89	4.16
-3.0 m			1.90 *	1.90 *							1.19 *	1.19 *	2.61

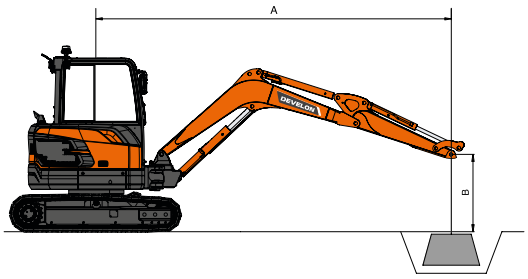

: Rating over front.
: Rating over side or 360°.

1. Load point is the end of the arm.
2. Capacities marked with an asterisk (*) are limited by hydraulic capacities.
3. Lift capacities shown do not exceed 75 % of minimun tipping loads or 87 % of hydraulic capacities.
4. The least stable position is over the side.
5. Lift capacities apply only to the machine as originally manufactured and normally equipped by the manufacturer.
6. Lift capacities are in compliance with ISO 10567.

STANDARD AND OPTIONAL EQUIPMENT

● Standard ○ Optional

Engine

- ● Develon D18 - Common rail diesel engine with direct fuel injection, Stage V compliant
- ● Auto-idle function

Hydraulic system

- ● Variable pistons pump
- ● Breaker piping with direct return to the tank
- ● 2-way high flow auxiliary line with settings from the display panel
- ● Cylinder cushioning & contamination seals
- ○ Rotation line (Pero)
- ○ Quick coupler line

Cab & interior

- ● Pressurized, sound-insulated cab
- ● Air suspension seat with heater
- ● Air conditioning
- ● Pull-up type front window and removable lower front window
- ● Sliding right windows with lock
- ● Ceiling light
- ● Intermittent upper windshield wiper
- ● Multiple storage compartments
- ● Flat, spacious, easy-to-clean floor
- ● Cup holder
- ● Anti-theft protection
- ● DEVELON Smart Touch – 8" touch screen, all-in-one
- ● Electric horn
- ● Engine speed (RPM) control dial
- ● Hydrostatic 2-speed travel system with manual or automatic shift
- ● DAB radio with handsfree call system
- ● USB charger & 12 V power socket
- ● Serial communication port for laptop PC interface
- ● Adjustable PPC for arm, boom, bucket and swing, with sliding proportional control for attachments and auxiliary hydraulic buttons
- ● Travel pedals and hand levers
- ● Master key

Safety

- ● Roll Over Protective Structure (ROPS)
- ● Boom and arm cylinder safety valves
- ● Overload warning device
- ● Rotating beacon
- ● Hydraulic safety lock lever
- ● Safety glass
- ● Hammer for emergency escape
- ● Right and left rearview mirrors
- ● Emergency engine stop switch
- ● Reinforced cast steel pivot points
- ● Battery cut-off switch
- ● LED work light (1 on the boom)
- ● Lockable fuel cap
- ○ LED work lights (2 additional lamps on top of the cab)
- ○ Falling Objects Guard System – top and front cab guards (ISO 10262 level II and SAE J1356)
- ○ Rear camera

Other

- ● DX50Z: 2700 mm mono boom – 1450 mm arm – 270 kg counterweight
- ● DX55R: 2700 mm mono boom – 1600 mm arm – 550 kg counterweight
- ● DEVELON Fleet Management Web (telematic system)
- ● Boom cylinder guard
- ● Double element air cleaner
- ● Self-diagnostic function
- ● Battery (12 V, 100 Ah), alternator (12 V, 80 A)
- ● Remote greasing for swing circle and workgroup pivot points
- ○ DX55R: 200 kg counterweight
- ○ DX55R: 1900 mm arm

Undercarriage

- ● Fixed undercarriage
- ● Hydraulic track adjuster
- ● 400 mm rubber tracks
- ● Dozer blade with floating function
- ○ 400 mm steel tracks (greased and sealed track links)
- ○ Dozer double check valve (kit)

Powered by **Innovation**

DISCOVER MORE:

DX50Z

DX55R

DEVELON

DOOSAN Infracore Europe s.r.o.
IBC - Pobřežní 620/3, 186 00 Praha 8-Karlín
Czech Republic

©2023 DEVELON D4601141-EN (03-23)

Certain specification(s) are based on engineering calculations and are not actual measurements. Specification(s) are provided for comparison purposes only and are subject to change without notice.
Specification(s) for your individual Develon equipment will vary based on normal variations in design, manufacturing, operating conditions, and other factors. Pictures of Develon units may show other than standard equipment.