DEVELON

Crawler Excavators

DX420LC-7K
DX490LC-7K, DX530LC-7K



	DX420LC-7K	DX490LC-7K	DX530LC-7K
Maximum power	344 hp	394 hp	394 hp
Operating weight	43.5 t	50.4 t	52.9 t
Bucket capacity	2.2 m^3	3.0 m^3	3.3 m^3

RAISE PROFITS, PRODUCTIVITY & FUEL EFFICIENCY

HIGH PRODUCTIVITY AND LOW COST OF OWNERSHIP

Delivers higher productivity and reduced fuel consumption in an efficient and comfortable work environment.

RELIABILITY

Reinforced castings and forged steel pivot points and reinforced heavy-duty arm and boom to withstand high-impact materials. Large, robust boom and arm cylinders for smooth, powerful operation. Advanced pin & bushing technology.

YOUR SAFETY IS OUR PRIORITY

360° camera system, large side mirrors, powerful LED work lights, anti-slip steps and platforms, guard rails on upper structure, and ultrasonic detection as option.

SPECIAL APPLICATIONS

Our long-reach machines – with a reach of 16 & 19.6 meters – are ideally suited for special applications.

PRODUCTIVITY

State-of-the-art bucket and arm digging forces.

UNDERCARRIAGE DURABILITY

Forged steel and deep-hardened top rollers – oil-lubricated rollers – heat-treated sprocket – deep-hardened, heat-treated, grease-lubricated & longer life track chains.



COMFORT

One of the most spacious cabs in the market, with low noise & vibration levels and excellent all-round visibility. Fully adjustable heated air-suspension seat, air conditioning with climate control as standard.

OPERATE AT EASE

All important information is at your fingertips with the new easy-to-use 8" touch screen. Exclusive jog shuttle switch, 4 work & 4 power modes, proportional control.



ENGINE

Exceptionally powerful – with high torque at low revs – the new 13l Scania engine combines reliability and low environmental impact. This Stage V compliant 6 cylinder engine delivers 257 kW at 1800 rpm (for DX420LC-7K) and 294 kW at 1800 rpm (for DX490LC-7K, DX530LC-7K).

EXCELLENT FUEL EFFICIENCY

In combination with the D-EcoPower system, the Smart Power Control (SPC) system provides increased fuel efficiency by 11% compared to the previous generation. The system delivers the exact amount of oil needed to avoid any loss of energy.

EASY MAINTENANCE

Easy access to all compartments. Radiator and oil cooler separated for better cooling and easier access. Maintenance data directly available from the control panel.

ADVANCED FILTRATION

Highest efficiency filters & cleaners remove water, dust & particles to protect your investment optimally.



The widest undercarriage in the 50-tonne market provides the DX420LC-7K, DX490LC-7K and DX530LC-7K with unrivaled stability.

Fixed chassis (DX420LC-7K):
- Narrow: 3.0 m
- STD: 3.35 m

Variable chassis (DX490LC-7K / DX530LC-7K):
- Narrow retracted/extended: 2.99 / 3.49 m
- STD retracted/extended: 3.34 / 3.90 m



D·ECO POWER

Real breakthrough technology that sets new standards in the industry: The exclusive ECO Power system improves productivity and saves fuel. A pressure-controlled pump, closed-center main control valve, and 9 sensors electronically detect and control the precise amount of hydraulic oil required to perform a task. The exact amount of oil required is metered instead of continuously forcing a fixed amount of oil through the system. The hydraulic system output requirements are optimized with engine horsepower. The resulting efficiency educes fuel consumption improves productivity substantially. Improved feedback through the controls results in an outstanding level of operator comfort and much smoother machine management.

TOP PERFORMANCE AND FUEL EFFICIENCY

THE POWER TO RAISE PRODUCTIVITY

- The DX420LC-7K, DX490LC-7K and DX530LC-7K are equipped with the latest generation Scania DC13 engine
- Stage V compliant, this engine boasts extremely low emissions because reducing our environmental impact is paramount to us
- Exhaust gases are purified by Selective Catalytic Reduction (SCR) technology, a Diesel Oxidation Catalyst (DOC) and a Diesel Particulate Filter (DPF)

EFFICIENT FUEL MANAGEMENT

- Choice of 4 power modes and 4 working modes guarantees optimum performance in all conditions
- Smart Power Control (SPC3) system: reduces engine speed and adjusts pump torque according to work conditions. The system automatically adjusts engine power and hydraulic output to improve fuel efficiency and reduce emissions
- Engine auto-shut-off: shuts down the engine after the machine has been idling for a specified time. The operator can set the delay before shut-off via the touchscreen

VARIABLE GEOMETRY TURBOCHARGER

Provides optimal air flow to the engine combustion chamber under all speed and load conditions, so that exhaust gas is cleaner and fuel economy is improved.

SPC3 (SMART POWER CONTROL)

2 systems (Variable Speed Control and Pump Torque Control) work together to improve efficiency while maintaining productivity.



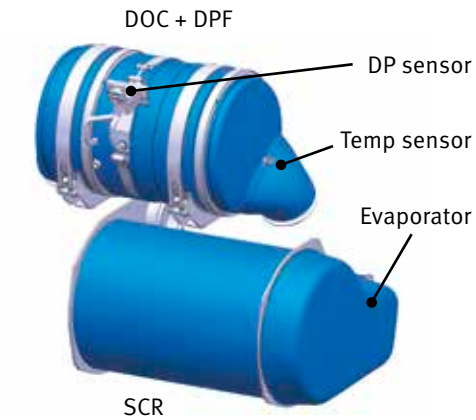



RELIABILITY – THE HABIT OF A LIFETIME

In your profession, you need equipment you can depend on. At Develon, we put durability and reliability at the core of our machines' development. Our materials and structures undergo stringent testing for strength and resilience under the most extreme conditions.

DESIGNED FOR LONG-TERM, ALL-ROUND, HEAVY-DUTY PERFORMANCE

EXTRA-STRONG X CHASSIS

Designed using finite element analysis and 3D computer simulation, the X-shaped undercarriage ensures optimum structural integrity and durability.

UNDERCARRIAGE DURABILITY

- The chain is composed of sealed, self-lubricating links for long-term dependability. For improved protection, alignment and performance, there are 3 types of guard available: normal, double, and full-length, according to the application
- The track spring and idler are joined for long-lasting performance and easy maintenance
- Cast steel heavy-duty sprockets guarantee the highest resistance
- The track rollers are lubricated for life

STRENGTHENED BOOM AND ARM

During the development of our machines, we use intensive testing to calculate the best load distribution throughout the boom structure.
Combined with thicker material, this means that element fatigue is limited and both reliability and component life are increased. To better protect the base of the arm, reinforced bars have been added and the arm center and end boss have been strengthened.

ADVANCED FILTRATION

- Fuel filters and water separator: a filter-type high-performance water separator effectively captures moisture in the fuel, reducing impurities and helping minimize any fuel-related issues. Pre-filters and dual main filters as standard achieve a high degree of purity that minimizes fuel system failures.
- Cyclonic air pre-cleaner: air filter life and engine efficiency are directly related to the amount of debris ingested through the engine's air intake. Therefore, a cyclonic air pre-cleaner (as standard) is the first stage of an air intake system that prevents the majority of heavier-than-air particles from entering. Self-cleaning and maintenance-free, the system is able to expel all types of mixed debris, including mud, snow, rain, leaves, sawdust, chaff, etc.

ADVANCED PIN AND BUSHING TECHNOLOGY

Highly lubricated metal is used for the boom pivot to increase the component's lifetime and lengthen greasing intervals. The bucket pivot features EM (Enhanced Macrosurface) bushings. These have a tailored surface pattern and self-lubricating coating for optimized greasing and more efficient debris removal. Ultra-hard wear-resistant discs and bucket pivot polymer shims increase durability even more.









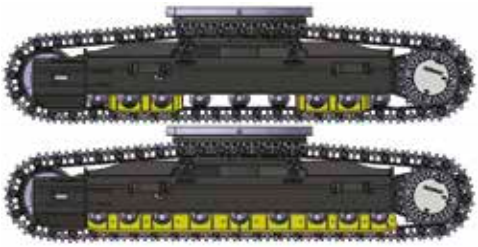

Track guards: to provide better protection, track alignment, and performance of machine while travelling. 3 guards per track as standard or DX490LC-7K & DX530LC-7K (full-length track guard optional) and, for DX420LC-7K, 2 guards per track as standard (double and full-length track guards available as options). These various track guard options provide you with optimal solutions for your extreme applications.


1
2
3
4
5
6
7



1. Large sun roof
2. Sun visor
3. Window grip
4. Storage compartment for sunglasses
5. Joysticks and switches are integrated in adjustable control consoles
6. Improved visibility on the bottom right
7. Separate seat height adjustment lever and cushion tilting function
8. Straight ergonomic pedals
9. Flat, spacious, easy-to-clean floor

OPERATING IN HIGH COMFORT

BEST-IN-CLASS OPERATOR ENVIRONMENT

The DX420LC-7K, DX490LC-7K and DX530LC-7K are designed to provide you with the best possible working conditions. The sophisticated state-of-the-art ROPS cab is pressurized and ISO-certified for your safety. A high-quality heated seat with air suspension provides maximum operator comfort.

FIRST CLASS COMFORT

Comfortably seated, you benefit from a clear all-round view of the worksite and have easy access to several storage compartments. Noise and vibration levels are remarkably low, while air conditioning and automatic climate control allow you to keep working for hours on end without feeling tired.
Pedals, joysticks and armrests have all been designed for operator comfort and efficiency.

CAB SUSPENSION

The cab's suspension system (CabSus mount) dampens vibrations and provides outstanding protection against impact. This system absorbs shocks and vibrations much more effectively than a conventional silentblock suspension system.

KING SIZE TOUCHSCREEN

The wide 8" touchscreen provides easy scrolling through the different menus, including power settings and auxiliary hydraulics settings. It also allows you to connect a Bluetooth device or listen to your favorite radio station.

360° CAMERA SYSTEM

The 360° camera system gives you full view of the machine's surroundings.





1. Proportional switch
2. Display monitor
3. Breaker/Booster button
4. Joystick 1-touch function button
5. Starter switch (Start/Stop button)
6. Engine speed control dial
7. Travel speed selector switch
8. Light switch
9. Cab work light switch
10. After-treatment system switch
11. Bluetooth control panel
12. Air conditioning and heating control panel
13. Wiper control panel
14. Quick coupler switch

TAKE A SEAT IN BUSINESS CLASS

The ergonomic controls and the easy-to-view color monitor place the machine firmly in your hands.

TOTAL CONTROL IN ALL SIMPLICITY

DYNAMIC POWER MANAGEMENT

- Automatic travel speed range selection (slow/fast)
- Activating the power boost control system increases digging force by 10%
- A one-touch deceleration button immediately reduces engine speed to low idle
- Auto-idling starts 4 seconds (adjustable) after all controls are returned to neutral – reducing fuel consumption and noise levels in the cab

"INTELLIGENT FLOATING BOOM" MODE (OPTIONAL)

The “intelligent floating boom” function allows the boom to move up and down freely according to the application:

- Hydraulic breaker setting: during boom down operation, the boom moves down freely under its own weight. The result is reduced shock and vibration and longer breaker service life
- Full float setting: during boom down selection, the boom is allowed to rise and fall as required while the bucket is drawn across the ground

4 WORK MODES AND 4 POWER MODES

Delivers the needed power according to your specific application while minimizing fuel consumption:

- 1-way mode, 2-way mode, Digging mode and Lifting mode
- Power Plus mode, Power mode, Standard mode, Economy mode

EXPERT FINGERTIP CONTROL

- The new multi-function 8" touchscreen displays all useful information in a visual and intuitive format
- At a glance, you can check the machine’s status and settings to achieve optimal efficiency
- Develon’s unique jog shuttle switch gives you easy and precise control over all machine functions
- Highly sensitive and low-effort joysticks enable you to work safely, smoothly and confidently
- The proportional thumb switches on the joysticks can be mounted horizontally or vertically, as the operator prefers, for optimal control of hydraulic attachments









SIMPLE MAINTENANCE WITH MAXIMUM UPTIME

MAINTENANCE ACCESS MADE SIMPLE

- Large guard rails are installed along with anti-slip steps and plates, for safer, easier access to the whole upper structure.
- The air conditioning filter is placed on the side of the cab for easy access. The filter's cover can be locked and opened with the starter key.
- A battery cut-off switch makes it easy to disconnect the battery for long-term storage.
- The hour meter display can be easily checked from ground level.
- Shut-off valves have been fitted on the pre-filter piping line and fuel tank drain piping to make servicing easier and prevent pollution from leakage.
- Engine parts can be easily reached via the top and side panels.
- 2 large separated cooling compartments equipped with reversible fans as standard increase the cooling performance and simplify maintenance.
- For extra accessibility and servicing convenience, all filters (engine oil filter, fuel pre-filters, fuel filters and pilot filter) are located in the pump compartment.

ADBLUE® TANK

Connected to the ECU, sensors in the tank detect low levels of AdBlue® or any other system malfunction.

CENTRALIZED GREASING POINTS

To make maintenance easier, the greasing points have been centralized. An automatic lubrication system is available as an option.



TECHNICAL SPECIFICATIONS DX420LC-7K

ENGINE

Designed to deliver superior performance and fuel efficiency, the Scania DC13 diesel engine fully meets latest Stage V emission regulations. To optimize machine performance, the engine uses high-pressure fuel injectors, air-to-air inter-cooler and electronic engine controls. 4-Cycle Water-Cooled, Variable Geometry Turbocharged, Diesel Oxidation Catalyst (DOC) & Selective Catalytic Reduction (SCR) and Diesel Particulate Filter (DPF).

Model

Scania DC13

No. of cylinders

6

Rated power at 1800 rpm

SAE J1995	257 kW (344.4 hp)
SAE J1349	252 kW (337.7 hp)

Max. torque

158.0 kgf·m @ 800-1500 rpm

Idle (low - high)

750 [±20] - 1900 [±25] rpm

Displacement

12700 cm³

Bore × stroke

130 mm × 160 mm

Starter

24 V / 6 kW

Batteries - Alternator

2 × 12 V, 200 Ah - 28 V, 100 A

Air filter

Double element air cleaner and pre-filtered Cyclone Turbo dust separator

HYDRAULIC CYLINDERS

High-strength steel piston rods and cylinder bodies. Shock-absorbing mechanism fitted in all cylinders for shock-free operation and extended piston life.

Cylinders	Quantity	Bore × rod diameter × stroke (mm)
Boom	2	170 × 115 × 1485
Arm	1	180 × 120 × 1820
Bucket	1	160 × 110 × 1320

HYDRAULIC SYSTEM

The e-EPOS (Electronic Power Optimizing System) is the brain of the excavator – minimizing fuel consumption and optimizing the efficiency of the hydraulic system for all working conditions.
To harmonize the operation of the engine and the hydraulics, the e-EPOS is connected to the engine's electronic control unit (ECU) via a data transfer link.

- The hydraulic system enables independent or combined operations
- 2 travel speeds offer either increased torque or high speed
- Cross-sensing pump system for fuel savings
- Auto-deceleration system
- 4 operating modes, 4 power modes
- Flow and pressure control of auxiliary hydraulic circuits from control panel
- Computer-aided pump flow control

Main pumps

2 × parallel, bent axis, axial piston pumps

Maximum flow at 1800 rpm	2 × 333 l/min

Pilot pump

Gear pump

Maximum flow at 1800 rpm	24 l/min

Relief valve settings

Implement	363 bar (370 kgf/cm²)
Travel	343 bar (350 kgf/cm²)
Swing	275 bar (280 kgf/cm²)
Pilot	40 bar (40.8 kgf/cm²)

SWING MECHANISM

The swing mechanism uses an axial piston motor, driving a 2-stage planetary reduction gear bathed in oil for maximum torque.

- Swing bearing: single-row, shear type ball bearing with induction hardened internal gear
- Internal gear and pinion immersed in lubricant

Maximum swing speed

9.6 rpm

Maximum swing torque

16360 kgf·m

WEIGHT

		DX420LC-7K (with standard/narrow track)	
	Shoe width (mm)	Machine weight (t)	Ground pressure (kgf/cm²)
Triple grouser	600 (Std)	43.6 / 43.3	0.80 / 0.79
	750	44.4 / 44.1	0.65 / 0.64
	800	44.6 / 44.3	0.61 / 0.61
	900	45.1 / 44.8	0.55 / 0.55
Double grouser	600	43.7 / 43.4	0.80 / 0.79

CAB

The air-conditioning and heating systems are integrated for optimal climate control. An automatically-controlled fan supplies the pressurized and filtered cab air, which is distributed throughout the cab from multiple vents.
The heated air-suspension, adjustable operator's seat includes a seat belt. The operator can adjust the ergonomic seat and joystick console separately according to his preferences.

A-weighted emission sound pressure level at the operator's position, LpAd (ISO 6396:2008)

71 dB(A)

A-weighted sound power level, LwAd (2000/14/EC)

Declared: 105 dB(A)
Measured: 104 dB(A)

DRIVE

Each track is driven by an independent, high-torque axial piston motor through a planetary reduction gearbox. Two levers / foot pedals guarantee smooth travel with counter-rotation on demand. The track frame protects the travel motor, brake and planetary gears. The multi-disc track brakes are spring-applied and hydraulic released.

Travel speed (low - high)

3.2 - 5.3 km/h

Maximum traction

43.4 t

Maximum gradeability

35° / 70%

FLUID CAPACITIES

Fuel tank	640 l
Cooling system (radiator)	52.5 l
AdBlue® (DEF) tank	70 l
Hydraulic oil tank	370 l
Engine oil	45 l
Swing drive	8 l
Travel device	2 × 7 l

UNDERCARRIAGE

Extremely robust construction throughout - made of high-quality, durable materials, with all welded structures designed to limit stresses.

- Track rollers lubricated for life
- Idlers and sprockets fitted with floating seals
- Track shoes made of induction-hardened alloy with triple grouser
- Heat-treated connecting pins
- Hydraulic track adjuster with shock-absorbing tension mechanism

Upper rollers (standard shoe)

2

Lower rollers

9

Number of links & shoes per side

50

Link pitch

215.9 mm

COMPONENT WEIGHTS

Item	Unit	DX420LC-7K	Remarks
Upper structure without front	kg	10275	Without counterweight
Lower structure assembly	kg	15125	Standard track with 600 mm shoes
Counterweight	kg	8000	
Front assembly	kg	9380	Based on standard
Boom	mm / kg	6700 / 3200 6700 HD / 3225	Including bushing
Arm	mm / kg	2600 / 1360 2950 / 1485 3250 / 1535 3250 HD / 1595 3950 / 1765	Including bushing

TECHNICAL SPECIFICATIONS DX490LC-7K & DX530LC-7K

ENGINE

Designed to deliver superior performance and fuel efficiency, the Scania DC13 diesel engine fully meets latest Stage V emission regulations. To optimize machine performance, the engine uses high-pressure fuel injectors, air-to-air inter-cooler and electronic engine controls. 4-Cycle Water-Cooled, Variable Geometry Turbocharged, Diesel Oxidation Catalyst (DOC) & Selective Catalytic Reduction (SCR) and Diesel Particulate Filter (DPF).

Model

Scania DC13

No. of cylinders

6

Rated power at 1800 rpm

SAE J1995	294 kW (394.2 hp)
SAE J1349	289 kW (387.6 hp)

Max. torque

189.8 kgf·m @ 900-1500 rpm

Idle (low - high)

750 [±20] - 1900 [±25] rpm

Displacement

12700 cm³

Bore × stroke

130 mm × 160 mm

Starter

24 V / 6 kW

Batteries - Alternator

2 × 12 V, 200 Ah - 28 V, 100 A

Air filter

Double element air cleaner and pre-filtered Cyclone Turbo dust separator

HYDRAULIC CYLINDERS

High-strength steel piston rods and cylinder bodies. Shock-absorbing mechanism fitted in all cylinders for shock-free operation and extended piston life.

Cylinders	Quantity	Bore × rod diameter × stroke (mm)
Boom	2	170 × 115 × 1650
Arm	1	190 × 130 × 1980
Bucket	1	170 × 115 × 1341

HYDRAULIC SYSTEM

The e-EPOS (Electronic Power Optimizing System) is the brain of the excavator – minimizing fuel consumption and optimizing the efficiency of the hydraulic system for all working conditions.
To harmonize the operation of the engine and the hydraulics, the e-EPOS is connected to the engine's electronic control unit (ECU) via a data transfer link.

- The hydraulic system enables independent or combined operations
- 2 travel speeds offer either increased torque or high speed
- Cross-sensing pump system for fuel savings
- Auto-deceleration system
- 4 operating modes, 4 power modes
- Flow and pressure control of auxiliary hydraulic circuits from control panel
- Computer-aided pump flow control

Main pumps

2 × parallel, bent axis, axial piston pumps

Maximum flow at 1800 rpm	2 × 390 l/min

Pilot pump

Gear pump

Maximum flow at 1800 rpm	24 l/min

Relief valve settings

Implement	380 bar (387.5 kgf/cm²)
Travel	343 bar (350 kgf/cm²)
Swing	294 bar (300 kgf/cm²)
Pilot	40 bar (40.8 kgf/cm²)

SWING MECHANISM

The swing mechanism uses an axial piston motor, driving a 2-stage planetary reduction gear bathed in oil for maximum torque.

- Swing bearing: single-row, shear type ball bearing with induction hardened internal gear
- Internal gear and pinion immersed in lubricant

Maximum swing speed

9.2 rpm

Maximum swing torque

20130 kgf·m

WEIGHT

		DX490LC-7K (with narrow/wide track)		DX530LC-7K (with narrow/wide track)	
	Shoe width (mm)	Machine weight (t)	Ground pressure (kgf/cm²)	Machine weight (t)	Ground pressure (kgf/cm²)
Triple grouser	600 (Std)	49.8 / 50.4	0.86 / 0.87	52.3 / 52.9	0.91 / 0.92
	750	50.8 / 51.4	0.70 / 0.71	53.3 / 53.9	0.74 / 0.75
	800	51.0 / 51.6	0.66 / 0.67	53.6 / 54.2	0.70 / 0.70
	900	51.6 / 52.2	0.60 / 0.60	54.1 / 54.8	0.62 / 0.63
Double grouser	600	49.8 / 50.4	0.86 / 0.87	52.4 / 53.0	0.91 / 0.92

CAB

The air-conditioning and heating systems are integrated for optimal climate control. An automatically-controlled fan supplies the pressurized and filtered cab air, which is distributed throughout the cab from multiple vents.
The heated air-suspension, adjustable operator's seat includes a seat belt. The operator can adjust the ergonomic seat and joystick console separately according to his preferences.

A-weighted emission sound pressure level at the operator's position, LpAd (ISO 6396:2008)

72 dB(A)

A-weighted sound power level, LwAd (2000/14/EC)

Declared: 106 dB(A)
Measured: 105 dB(A)

DRIVE

Each track is driven by an independent, high-torque axial piston motor through a planetary reduction gearbox. Two levers / foot pedals guarantee smooth travel with counter-rotation on demand. The track frame protects the travel motor, brake and planetary gears. The multi-disc track brakes are spring-applied and hydraulic released.

Travel speed (low - high)

3.2 - 5.6 km/h

Maximum traction

45.7 t

Maximum gradeability

35° / 70%

FLUID CAPACITIES

Fuel tank	626 l
Cooling system (radiator)	52.5 l
AdBlue® (DEF) tank	70 l
Hydraulic oil tank	390 l
Engine oil	45 l
Swing drive	2 × 5 l
Travel device	2 × 9 l

UNDERCARRIAGE

Extremely robust construction throughout - made of high-quality, durable materials, with all welded structures designed to limit stresses.

- Track rollers lubricated for life
- Idlers and sprockets fitted with floating seals
- Track shoes made of induction-hardened alloy with triple grouser
- Heat-treated connecting pins
- Hydraulic track adjuster with shock-absorbing tension mechanism

Upper rollers (standard shoe)

3 (variable track)

Lower rollers

9

Number of links & shoes per side

53

Link pitch

215.9 mm

COMPONENT WEIGHTS

Item	Unit	DX490LC-7K	DX530LC-7K	Remarks
Upper structure without front	kg	11467	11467	Without counterweight
Lower structure assembly	kg	19951	19951	Wide variable track with 600 mm shoes
Counterweight	kg	8500 / 9200	11100	
Front assembly	kg	10670	10635	Based on standard
Boom	mm / kg	6300 / 3540 7100 / 3845 7100 HD / 3905	6300 / 3540 7100 / 3845 7100 HD / 3905 9000 Semi-SLF / 4010 11000 SLF / 4500	Including bushing
Arm	mm / kg	2400 / 1565 2900 / 1640 3350 / 1760 3350 HD / 1795 3980 / 1895	2400 / 1565 2900 / 1640 3350 / 1760 3350 HD / 1795 3980 / 1895 6000 Semi-SLF / 2040 8000 SLF / 2460	Including bushing

TECHNICAL SPECIFICATIONS DX420LC-7K, DX490LC-7K & DX530LC-7K

BUCKETS – DX420LC-7K

Bucket Type	Capacity (m³) SAE	Width (mm)		Weight (kg)	Standard track (3.35 m) / narrow track (3.0 m)				
					6.7 m boom / 8.0 t counterweight				6.7 m HD boom / 8.0 t cwt
		W/O side cutters	With side cutters		2.60 m arm	2.95 m arm	3.25 m arm	3,95 m arm	3.25 m HD arm
H Class	1.64	1256	1290	1601	A / A	A / A	A / A	A / B	A / A
	1.92	1430	1464	1729	A / A	A / B	A / B	B / C	A / B
	2.14	1566	1600	1860	A / B	A / B	B / C	C / D	B / C
	2.47	1770	1804	2009	B / C	B / C	C / D	D / -	C / D
S Class	1.77	1364	1364	2128	A / A	A / B	A / B	B / C	A / B
	2.02	1518	1518	2266	A / B	A / C	B / C	C / D	B / C
Rock	1.51	1497	-	1643	A / A	A / A	A / A	A / A	A / A

A: Suitable for materials with a density less than or equal to 2100 kg/m³
B : Suitable for materials with a density less than or equal to 1800 kg/m³
C: Suitable for materials with a density less than or equal to 1500 kg/m³
D: Suitable for materials with a density less than or equal to 1200 kg/m³
–: Not recommended
Based on ISO 10567 and SAE J296, arm length without quick-coupler. For reference only.

BUCKETS – DX490LC-7K

Bucket Type	Capacity (m³) SAE	Width (mm)		Weight (kg)	Narrow track (3.49 m) / wide track (3.9 m)				
					7.1 m boom / 8.5 t counterweight			6.3 m boom / 9.2 t counterweight	
		W/O side cutters	With side cutters		2.90 m arm	3.35 m arm	3.98 m arm	2.40 m arm	2.90 m arm
GP	1.80	1381	1474	1718	A / A	A / A	A / A	A / A	A / A
	2.14	1588	1682	1910	A / A	A / A	B / A	A / A	A / A
	2.39	1744	1837	2027	A / A	B / A	C / A	A / A	A / A
	2.86	2037	2130	2279	C / A	C / B	D / C	A / A	A / A
R2H	1.80	1232	1266	1831	A / A	A / A	A / A	A / A	A / A
	2.07	1382	1416	1952	A / A	A / A	B / A	A / A	A / A
	2.35	1532	1566	2121	A / A	B / A	C / A	A / A	A / A
	2.72	1732	1766	2283	C / A	C / B	D / B	A / A	A / A
	2.91	1832	1866	2411	C / B	D / B	D / C	A / A	A / A
	3.28	2032	2066	2572	D / B	D / C	- / D	A / A	B / A
R2S	1.94	1350	-	2268	A / A	A / A	B / A	A / A	A / A
	2.22	1500	-	2407.8	A / A	B / A	C / A	A / A	A / A
	2.59	1700	-	2593.6	C / A	C / B	D / B	A / A	A / A
	2.78	1800	-	2735.7	C / B	D / B	C / C	A / A	A / A
	3.15	2000	-	2921.6	D / C	D / C	- / D	A / A	B / A
Rock	1.71	1572	-	2075	A / A	A / A	A / A	A / A	A / A

A: Suitable for materials with a density less than or equal to 2100 kg/m³
B : Suitable for materials with a density less than or equal to 1800 kg/m³
C: Suitable for materials with a density less than or equal to 1500 kg/m³
D: Suitable for materials with a density less than or equal to 1200 kg/m³
–: Not recommended
Based on ISO 10567 and SAE J296, arm length without quick-coupler. For reference only.

BUCKETS – DX530LC-7K

Bucket Type	Capacity (m³) SAE	Width (mm)		Weight (kg)	Narrow track (3.49 m) / wide track (3.9 m)					Wide track (3.9 m) with 11.1 t c/w	
					7.1 m boom / 11.1 t counterweight			6.3 m boom / 11.1 t counterweight		9.0 m boom	11.0 m boom
		W/O side cutters	With side cutters		2.90 m arm	3.35 m arm	3.98 m arm	2.40 m arm	2.90 m arm	6.0 m arm	8.0 m arm
GP	1.80	1381	1474	1718	A / A	A / A	A / A	A / A	A / A	- / -	- / A
	2.14	1588	1682	1910	A / A	A / A	A / A	A / A	A / A	- / -	- / -
	2.39	1744	1837	2027	A / A	A / A	A / A	A / A	A / A	- / -	- / -
	2.86	2037	2130	2279	A / A	B / A	C / A	A / A	A / A	- / -	- / -
R2H	1.80	1232	1266	1831	A / A	A / A	A / A	A / A	A / A	- / -	- / -
	2.07	1382	1416	1952	A / A	A / A	A / A	A / A	A / A	- / -	- / -
	2.35	1532	1566	2121	A / A	A / A	A / A	A / A	A / A	- / -	- / -
	2.72	1732	1766	2283	A / A	B / A	B / A	A / A	A / A	- / -	- / -
	2.91	1832	1866	2411	A / A	B / A	C / A	A / A	A / A	- / -	- / -
	3.28	2032	2066	2572	B / A	C / B	D / B	A / A	B / A	- / -	- / -
R2S	1.94	1350	-	2268	A / A	A / A	A / A	A / A	A / A	- / -	- / -
	2.22	1500	-	2407.8	A / A	A / A	A / A	A / A	A / A	- / -	- / -
	2.59	1700	-	2593.6	A / A	B / A	B / A	A / A	A / A	- / -	- / -
	2.78	1800	-	2735.7	A / A	B / A	C / B	A / A	A / A	- / -	- / -
	3.15	2000	-	2921.6	C / A	C / B	D / C	A / A	B / A	- / -	- / -
Rock	1.71	1572	-	2075	A / A	A / A	A / A	A / A	A / A	- / -	- / -
SLR	0.93	1173	1236	754	- / -	- / -	- / -	- / -	- / -	- / -	- / A
Semi-SLR	1.27	1376	1445	1160	- / -	- / -	- / -	- / -	- / -	- / A	- / -
Semi-DC*	1.12	1500	-	1040	- / -	- / -	- / -	- / -	- / -	- / A	- / -
	1.37	1800	-	1430	- / -	- / -	- / -	- / -	- / -	- / A	- / -

A: Suitable for materials with a density less than or equal to 2100 kg/m³
B : Suitable for materials with a density less than or equal to 1800 kg/m³
C: Suitable for materials with a density less than or equal to 1500 kg/m³
D: Suitable for materials with a density less than or equal to 1200 kg/m³
–: Not recommended
* Ditch cleaning bucket
Based on ISO 10567 and SAE J296, arm length without quick-coupler. For reference only.

DEVELON BUCKETS

4 More. More choice - More durable - More strength - More performance!

General Construction Bucket



The General purpose bucket is designed for digging and re-handling soft to medium materials (e.g. materials with low wear characteristics such as top-soil, loam, coal).

Heavy Construction Bucket



The Heavy duty bucket is designed for mass excavations in dense materials such as hard packed clay, shot limestone, limited rock content and gravel.

Severe Mining Bucket



The Severe duty bucket is designed for durability in digging compact materials like loose or blasted rock, hard packed clay and stone.

X-treme Mining Bucket



The X-treme duty bucket is designed as a long-life version of the Severe duty bucket for digging in the most abrasive materials.

DIMENSIONS
DX420LC-7K

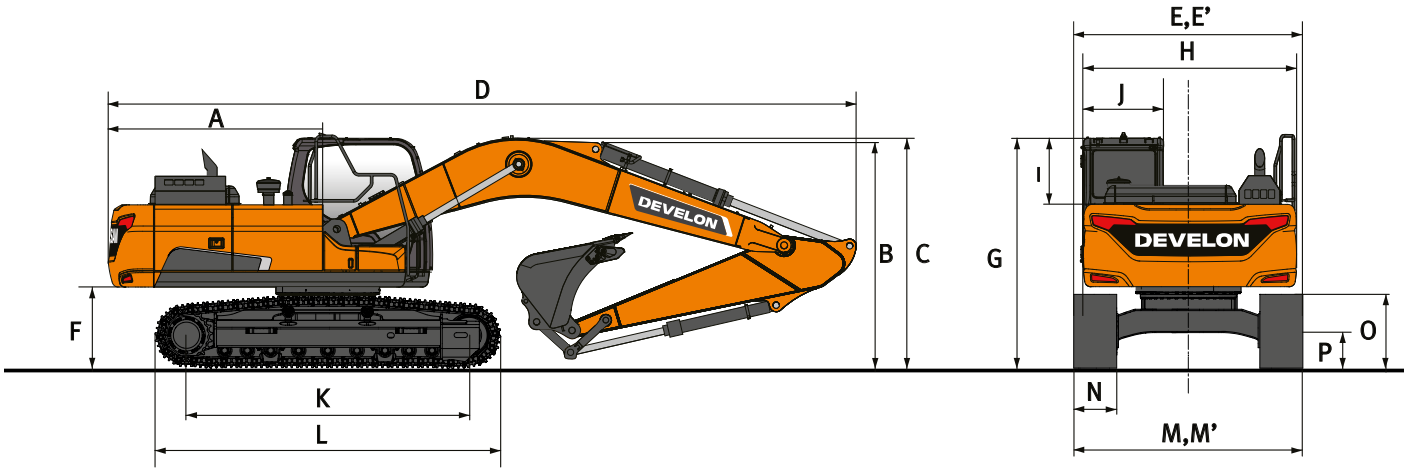

DIMENSIONS

	Unit	DX420LC-7K				
Boom length	**mm**	**6700**				**6700 HD**
Arm length	**mm**	**2600**	**2950**	**3250**	**3950**	**3250 HD**
Bucket capacity	**m³**	**2.14**	**1.92**	**1.90**	**1.64**	**1.51**
A Tail swing radius	mm	3760	3760	3760	3760	3760
B Shipping height (boom)	mm	3595	3570	3355	3390	3355
C Shipping height (hose)	mm	3695	3710	3466	3495	3466
D Shipping length	mm	11870	11830	11740	11740	11740
E Shipping width (STD)	mm	3350	3350	3350	3350	3350
E' Shipping width (narrow)	mm	3350	3350	3350	3350	3350
F Counterweight clearance*	mm	1280	1280	1280	1280	1260
G Height over cab	mm	3210	3210	3210	3210	3170
H House width	mm	2990	2990	2990	2990	2990
I Cab height above house	mm	845	845	845	845	845
J Cab width	mm	1010	1010	1010	1010	1010
K Tumbler distance	mm	4250	4250	4250	4250	4250
L Track length	mm	5200	5200	5200	5200	5160
M Undercarriage width (STD)	mm	3350	3350	3350	3350	3350
M' Undercarriage width (narrow)	mm	3000	3000	3000	3000	3000
N Shoe width	mm	600	600	600	600	600
O Track height*	mm	1070	1070	1070	1070	1070
P Ground clearance*	mm	600	600	600	600	580

* : without grouser

WORKING RANGE
DX420LC-7K

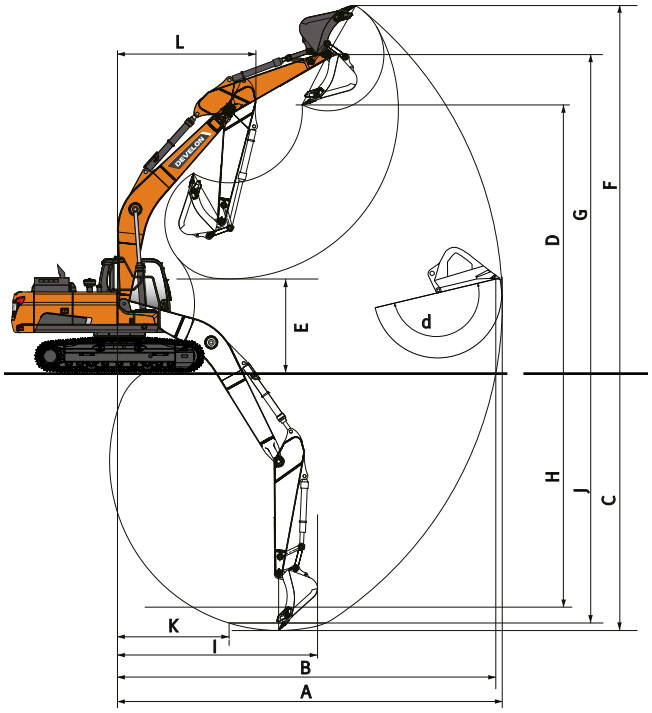

WORKING RANGE

	Unit	DX420LC-7K				
Boom length	**mm**	**6700**				**6700 HD**
Arm length	**mm**	**2600**	**2950**	**3250**	**3950**	**3250 HD**
Bucket capacity	**m³**	**2.14**	**1.92**	**1.92**	**1.64**	**1.51**
A Max. digging reach	mm	10810	11130	11430	12120	11495
B Max. digging reach (ground)	mm	10575	10905	11210	11910	11275
C Max. digging depth	mm	6980	7355	7635	8335	7685
D Max. loading height	mm	7485	7630	7810	8200	7755
E Min. loading height	mm	3760	3395	3095	2395	3045
F Max. digging height	mm	10265	10420	10615	11045	10720
G Max. bucket pin height	mm	9160	9310	9485	9875	9485
H Max. vertical wall depth	mm	2430	2755	3075	3815	5130
I Max. radius vertical	mm	9735	9935	10105	10475	8820
J Max. digging depth (8´level)	mm	6755	7155	7455	8185	7510
K Min. radius (8´level)	mm	3370	3380	3415	3465	3420
L Min. swing radius	mm	4495	4505	4475	4555	4475
d Bucket angle	°	177	177	177	177	177

DIGGING FORCES (ISO)

	Unit	DX420LC-7K				
Boom length	**mm**	**6700**				**6700 HD**
Arm length	**mm**	**2600**	**2950**	**3250**	**3950**	**3250 HD**
Bucket capacity	**m³**	**2.14**	**1.92**	**1.92**	**1.64**	**1.51**
BUCKET (Normal/Press. Up)	ton	26.0 / 27.6	26.0 / 27.6	26.0 / 27.6	26.0 / 27.6	26.5 / 28.1
ARM (Normal/Press. Up)	ton	23.5 / 24.9	21.0 / 22.3	18.9 / 20.1	16.4 / 17.4	19.0 / 20.2

DIMENSIONS
DX490LC-7K & DX530LC-7K

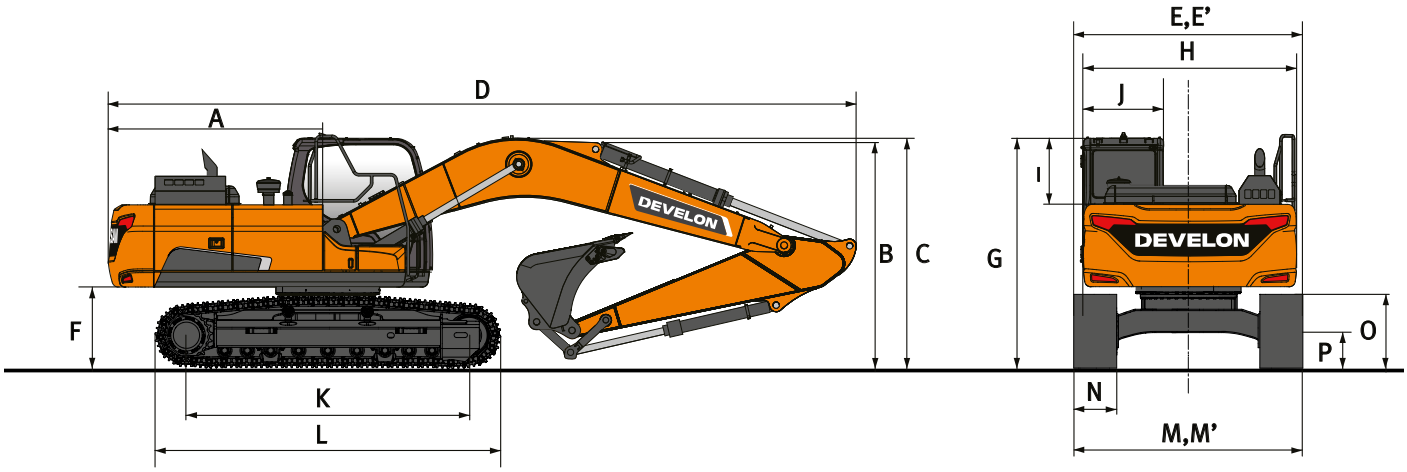

DIMENSIONS

	Unit	DX490LC-7K & DX530LC-7K (variable track)						DX530LC-7K	
Boom length	**mm**	**7100**			**7100 HD**	**6300**		**9000**	**11000**
Arm length	**mm**	**2900**	**3350**	**3980**	**3350 HD**	**2400**	**2900**	**6000**	**8000**
Bucket capacity	**m³**	**2.39**	**2.14**	**1.80**	**1.71**	**3.28**	**2.91**	**1.27**	**0.92**
A Tail swing radius	mm	3800	3800	3800	3800	3800	3800	3800	3800
B Shipping height (boom)	mm	3800	3580	3815	3580	4010	4125	3765	3935
C Shipping height (hose)	mm	3895	3705	3910	3705	4060	4165	3910	4070
D Shipping length	mm	12330	12230	12310	12230	11720	11530	14155	16195
E Shipping width (wide)	mm	3340	3340	3340	3340	3340	3340	3340	3340
E' Shipping width (narrow)	mm	2990	2990	2990	2990	2990	2990	2990	2990
F Counterweight clearance**	mm	1430	1430	1430	1430	1430	1430	1430	1430
G Height over cab	mm	3350	3350	3350	3350	3350	3350	3350	3350
H House width	mm	2990	2990	2990	2990	2990	2990	2990	2990
H House width (incl. catwalk)	mm	3296	3296	3296	3296	3296	3296	3296	3296
I Cab height above house	mm	845	845	845	845	845	845	845	845
J Cab width	mm	1010	1010	1010	1010	1010	1010	1010	1010
K Tumbler distance	mm	4475	4475	4475	4475	4475	4475	4475	4475
L Track length	mm	5455	5455	5455	5455	5455	5455	5455	5455
M Undercarriage width (wide)	mm	3340 / 3900*	3340 / 3900*	3340 / 3900*	3340 / 3900*	3340 / 3900*	3340 / 3900*	3340 / 3900*	3340 / 3900*
M' Undercarriage width (narrow)	mm	2990 / 3490*	2990 / 3490*	2990 / 3490*	2990 / 3490*	2990 / 3490*	2990 / 3490*	2990 / 3490*	2990 / 3490*
N Shoe width	mm	600	600	600	600	600	600	600	600
O Track height**	mm	1180	1180	1180	1180	1180	1180	1180	1180
P Ground clearance**	mm	730	730	730	730	730	730	730	730

*** : retracted / extended (without side steps, + 200 mm with side steps)**
**** : without grouser**

WORKING RANGE
DX490LC-7K & DX530LC-7K

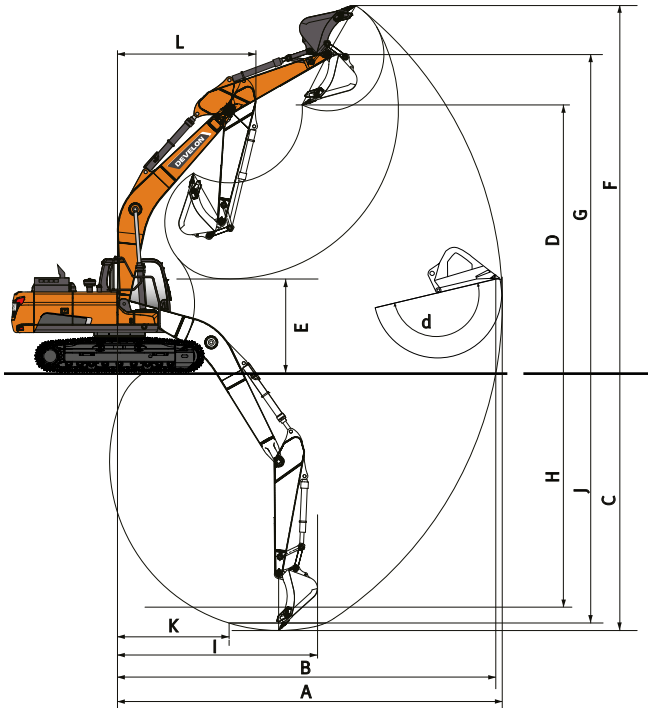

WORKING RANGE

	Unit	DX490LC-7K & DX530LC-7K (variable track)						DX530LC-7K	
Boom length	**mm**	**7100**			**7100 HD**	**6300**		**9000**	**11000**
Arm length	**mm**	**2900**	**3350**	**3980**	**3350 HD**	**2400**	**2900**	**6000**	**8000**
Bucket capacity	**m³**	**2.39**	**2.14**	**1.80**	**1.71**	**3.28**	**2.91**	**1.27**	**0.92**
A Max. digging reach	mm	11720	12125	12670	12125	10305	10735	16060	19615
B Max. digging reach (ground)	mm	11455	11865	12425	11865	10000	10445	15870	19455
C Max. digging depth	mm	7340	7790	8405	7790	6260	6755	11795	15125
D Max. loading height	mm	7725	7865	8025	7865	6650	6750	9800	11890
E Min. loading height	mm	3580	3130	2510	3130	3505	2980	2076	1465
F Max. digging height	mm	10920	11050	11205	11050	9495	9630	12755	14435
G Max. bucket pin height	mm	9550	9690	9850	9690	8455	8555	11415	13355
H Max. vertical wall depth	mm	4045	4370	4930	4370	590	1155	10300	12805
I Max. radius vertical	mm	9710	9970	10235	9970	9845	10095	9515	12165
J Max. digging depth (8´level)	mm	7165	7635	8265	7635	6020	6535	11670	15010
K Min. radius (8´level)	mm	3885	3895	3905	3895	3195	3175	4885	6165
L Min. swing radius	mm	5235	5210	5185	5210	4740	4715	6525	7825
d Bucket angle	°	181.2	189.1	180.9	189.1	184.5	186.2	175.2	177.6

DIGGING FORCES (ISO)

	Unit	DX490LC-7K & DX530LC-7K (variable track)						DX530LC-7K	
Boom length	**mm**	**7100**			**7100 HD**	**6300**		**9000**	**11000**
Arm length	**mm**	**2900**	**3350**	**3980**	**3350 HD**	**2400**	**2900**	**6000**	**8000**
Bucket capacity	**m³**	**2.39**	**2.14**	**1.80**	**1.71**	**3.28**	**2.91**	**1.27**	**0.92**
BUCKET (Normal/Press. Up)	ton	29.0 / 30.8	29.0 / 30.8	29.0 / 30.8	30.7 / 32.6	28.4 / 30.1	28.4 / 30.1	19.2 / 20.3	14.3 / 15.2
ARM (Normal/Press. Up)	ton	24.4 / 25.8	21.4 / 22.7	19.1 / 20.3	21.4 / 22.7	28.3 / 30.0	24.4 / 25.8	13.8 / 15.1	10.9 / 11.9

LIFTING CAPACITIES
DX420LC-7K

TRACK WIDTH: 3350 MM • W/O BUCKET

(UNIT: 1000 KG)

A	1.5 m		3.0 m		4.5 m		6.0 m		7.5 m		9.0 m		Max. reach		
B															A
Boom 6.7 m • Arm 2.6 m • Shoe 600 mm • Counterweight 8.0 t															
9.0 m							11.47 *	11.47 *					11.49 *	11.49 *	6.06
7.5 m													10.92 *	9.74	7.44
6.0 m							12.15 *	12.15 *	11.01 *	9.50			10.77 *	7.99	8.32
4.5 m					18.44 *	18.44 *	13.87 *	12.84	11.76 *	9.20			10.78	7.08	8.86
3.0 m							15.74 *	12.13	12.69 *	8.85	10.36	6.76	10.15	6.63	9.12
1.5 m							17.07 *	11.60	13.36	8.54	10.21	6.62	10.01	6.50	9.12
0.0 m					18.48 *	17.28	17.52 *	11.33	13.15	8.36			10.33	6.68	8.87
-1.5 m					22.12 *	17.38	17.02 *	11.29	13.11	8.32			11.29	7.26	8.34
-3.0 m			24.76 *	24.76 *	19.74 *	17.65	15.42 *	11.45					11.72 *	8.54	7.47
-4.5 m			19.27 *	19.27 *	15.56 *	15.56 *	11.64 *	11.64 *					11.25 *	11.25 *	6.12
Boom 6.7 m • Arm 2.95 m • Shoe 600 mm • Counterweight 8.0 t															
9.0 m													10.67 *	10.67 *	6.54
7.5 m									10.21 *	9.69			10.27 *	8.98	7.83
6.0 m							11.51 *	11.51 *	10.49 *	9.54			10.18 *	7.48	8.67
4.5 m					17.29 *	17.29 *	13.26 *	12.93	11.31 *	9.22	10.31 *	6.91	10.17	6.67	9.19
3.0 m							15.21 *	12.19	12.32 *	8.84	10.34	6.74	9.60	6.25	9.44
1.5 m							16.72 *	11.61	13.19 *	8.51	10.16	6.57	9.46	6.13	9.44
0.0 m					20.15 *	17.18	17.39 *	11.28	13.09	8.29	10.04	6.46	9.73	6.28	9.20
-1.5 m			15.04 *	15.04 *	22.60 *	17.21	17.13 *	11.19	13.00	8.22			10.55	6.77	8.69
-3.0 m			25.46 *	25.46 *	20.48 *	17.45	15.82 *	11.3	12.21 *	8.33			11.32 *	7.85	7.86
-4.5 m			21.47 *	21.47 *	16.77 *	16.77 *	12.80 *	11.65					11.13 *	10.28	6.59
Boom 6.7 m • Arm 3.25 m • Shoe 600 mm • Counterweight 8.0 t															
9.0 m													9.34 *	9.34 *	6.96
7.5 m									9.68 *	9.68 *			8.71 *	8.36	8.19
6.0 m									10.05 *	9.59			8.52 *	7.05	8.99
4.5 m					16.31 *	16.31 *	12.72 *	12.72 *	10.93 *	9.25	9.96 *	6.92	8.62 *	6.32	9.49
3.0 m					20.53 *	18.59	14.74 *	12.25	11.99 *	8.85	10.33	6.73	8.98 *	5.93	9.74
1.5 m					18.89 *	17.49	16.38 *	11.62	12.93 *	8.49	10.13	6.53	8.99	5.81	9.74
0.0 m					20.92 *	17.10	17.22 *	11.24	13.04	8.25	9.98	6.4	9.23	5.94	9.50
-1.5 m			14.93 *	14.93 *	22.88 *	17.07	17.16 *	11.10	12.93	8.14	9.96	6.38	9.94	6.37	9.01
-3.0 m	18.28 *	18.28 *	23.47 *	23.47 *	21.02 *	17.26	16.09 *	11.17	12.52 *	8.20			10.91 *	7.30	8.21
-4.5 m			23.20 *	23.20 *	17.68 *	17.68 *	13.53 *	11.47					10.84 *	9.30	7.01

TRACK WIDTH: 3000 MM • W/O BUCKET

Boom 6.7 m • Arm 2.6 m • Shoe 600 mm • Counterweight 8.0 t

9.0 m							11.47 *	11.47 *					11.49 *	11.49 *	6.06
7.5 m													10.92 *	8.53	7.44
6.0 m							12.15 *	11.8	11.01 *	8.32			10.77 *	6.98	8.32
4.5 m					18.44 *	16.87	13.87 *	11.15	11.76 *	8.03			10.73	6.17	8.86
3.0 m							15.74 *	10.47	12.69 *	7.68	10.31	5.87	10.10	5.75	9.12
1.5 m							17.07 *	9.96	13.29	7.39	10.15	5.74	9.95	5.63	9.12
0.0 m					18.48 *	14.56	17.52 *	9.70	13.08	7.21			10.28	5.77	8.87
-1.5 m					22.12 *	14.65	17.02 *	9.66	13.04	7.17			11.23	6.28	8.34
-3.0 m			24.76 *	24.76 *	19.74 *	14.91	15.42 *	9.81					11.72 *	7.38	7.47
-4.5 m			19.27 *	19.27 *	15.56 *	15.41	11.64 *	10.25					11.25 *	10.00	6.12

Boom 6.7 m • Arm 2.95 m • Shoe 600 mm • Counterweight 8.0 t

9.0 m													10.67 *	10.64	6.54
7.5 m									10.21 *	8.50			10.27 *	7.87	7.83
6.0 m							11.51 *	11.51 *	10.49 *	8.36			10.18 *	6.53	8.67
4.5 m					17.29 *	17.17	13.26 *	11.24	11.31 *	8.04	10.31 *	6.01	10.12	5.80	9.19
3.0 m							15.21 *	10.52	12.32 *	7.68	10.29	5.84	9.55	5.42	9.44
1.5 m							16.72 *	9.96	13.19 *	7.35	10.10	5.68	9.41	5.30	9.44
0.0 m					20.15 *	14.46	17.39 *	9.65	13.02	7.14	9.99	5.58	9.68	5.42	9.20
-1.5 m			15.04 *	15.04 *	22.60 *	14.49	17.13 *	9.56	12.94	7.07			10.49	5.84	8.69
-3.0 m			25.46 *	25.46 *	20.48 *	14.71	15.82 *	9.67	12.21 *	7.17			11.32 *	6.77	7.86
-4.5 m			21.47 *	21.47 *	16.77 *	15.16	12.80 *	10.01					11.13 *	8.87	6.59

Boom 6.7 m • Arm 3.25 m • Shoe 600 mm • Counterweight 8.0 t

9.0 m													9.34 *	9.34 *	6.96
7.5 m									9.68 *	8.57			8.71 *	7.32	8.19
6.0 m									10.05 *	8.4			8.52 *	6.14	8.99
4.5 m					16.31 *	16.31 *	12.72 *	11.32	10.93 *	8.07	9.96 *	6.02	8.62 *	5.49	9.49
3.0 m					20.53 *	15.79	14.74 *	10.58	11.99 *	7.68	10.28	5.83	8.98 *	5.14	9.74
1.5 m					18.89 *	14.75	16.38 *	9.97	12.93 *	7.33	10.07	5.65	8.95	5.02	9.74
0.0 m					20.92 *	14.38	17.22 *	9.61	12.97	7.09	9.93	5.52	9.18	5.12	9.50
-1.5 m			14.93 *	14.93 *	22.88 *	14.35	17.16 *	9.47	12.86	6.99	9.91	5.50	9.89	5.49	9.01
-3.0 m	18.28 *	18.28 *	23.47 *	23.47 *	21.02 *	14.53	16.09 *	9.54	12.52 *	7.05			10.91 *	6.29	8.21
-4.5 m			23.20 *	23.20 *	17.68 *	14.93	13.53 *	9.83					10.84 *	8.02	7.01

LIFTING CAPACITIES
DX490LC-7K

TRACK WIDTH: 3490 MM • W/O BUCKET

(UNIT: 1000 KG)

A	3.0 m		4.5 m		6.0 m		7.5 m		9.0 m		Max. reach		
B													A
Boom 6.3 m • Arm 2.4 m • Shoe 600 mm • Counterweight 8.5 t													
7.5 m											14.15*	12.87	6.84
6.0 m					15.27*	15.27*	14.00*	10.96			13.93*	10.39	7.74
4.5 m					17.15*	14.90	14.67*	10.68			13.99*	9.16	8.28
3.0 m					19.17*	14.16	15.62*	10.32			13.62	8.59	8.51
1.5 m					20.56*	13.61	16.20	10.02			13.54	8.48	8.47
0.0 m			27.81*	20.41	20.86*	13.35	16.02	9.86			14.21	8.85	8.15
-1.5 m			25.85*	20.55	19.87*	13.35	15.27*	9.91			15.20*	9.88	7.52
-3.0 m	27.77*	27.77*	22.09*	20.94	16.90*	13.64					15.14*	12.32	6.48

TRACK WIDTH: 3900 MM • W/O BUCKET

Boom 6.3 m • Arm 2.9 m • Shoe 600 mm • Counterweight 8.5 t

7.5 m											12.66*	12.66*	7.36
6.0 m							13.12*	12.97			12.50*	11.18	8.20
4.5 m			20.82*	20.82*	16.23*	16.23*	13.99*	12.64			12.81*	9.99	8.71
3.0 m					18.45*	17.04	15.10*	12.23			12.82	9.42	8.93
1.5 m					20.14*	16.39	16.03*	11.88			12.73	9.32	8.89
0.0 m			28.23*	25.08	20.83*	16.03	16.18	11.66			13.28	9.67	8.59
-1.5 m	25.30*	25.30*	26.84*	25.10	20.30*	15.94	15.83*	11.61			14.52*	10.67	7.99
-3.0 m	31.42*	31.42*	23.75*	23.75*	18.14*	16.12					14.77*	12.90	7.03
-4.5 m			17.71*	17.71*							14.18*	14.18*	5.49

Boom 7.1 m • Arm 2.9 m • Shoe 600 mm • Counterweight 8.5 t

9.0 m											11.78*	11.78*	7.38
7.5 m							11.84*	11.84*			11.12*	10.6	8.50
6.0 m					14.22*	14.22*	12.49*	12.49*	11.64*	9.55	10.93*	9.13	9.23
4.5 m					16.40*	16.40*	13.58*	12.37	12.04*	9.36	11.08*	8.32	9.68
3.0 m					18.55*	16.40	14.73*	11.89	12.48	9.12	10.81	7.92	9.88
1.5 m					19.95*	15.77	15.63*	11.51	12.25	8.91	10.74	7.84	9.85
0.0 m			18.79*	18.79*	20.34*	15.47	15.78	11.27	12.11	8.78	11.11	8.08	9.58
-1.5 m			25.44*	24.43	19.75*	15.42	15.67*	11.21	12.13	8.79	12.04	8.74	9.05
-3.0 m	28.38*	28.38*	22.87*	22.87*	18.09*	15.58	14.23*	11.33			12.36*	10.08	8.21
-4.5 m	22.68*	22.68*	18.60*	18.60*	14.65*	14.65*					11.84*	11.84*	6.95

Boom 7.1 m • Arm 3.35 m • Shoe 600 mm • Counterweight 8.5 t

9.0 m							11.14*	11.14*			8.66*	8.66*	7.92
7.5 m							11.14*	11.14*			8.23*	8.23*	8.96
6.0 m							11.88*	11.88*	11.07*	9.65	8.11*	8.11*	9.66
4.5 m			20.84*	20.84*	15.59*	15.59*	13.03*	12.48	11.60*	9.43	8.22*	7.83	10.09
3.0 m			21.39*	21.39*	17.86*	16.58	14.28*	11.97	12.25*	9.15	8.55*	7.46	10.28
1.5 m			16.84*	16.84*	19.52*	15.85	15.31*	11.54	12.25	8.91	9.13*	7.38	10.25
0.0 m			21.19*	21.19*	20.23*	15.45	15.76	11.25	12.07	8.74	10.07*	7.58	9.99
-1.5 m	17.04*	17.04*	26.23*	24.22	19.96*	15.33	15.64	11.13	12.02	8.69	11.19	8.12	9.49
-3.0 m	26.21*	26.21*	23.99*	23.99*	18.66*	15.42	14.75*	11.20			11.96*	9.23	8.69
-4.5 m	25.84*	25.84*	20.25*	20.25*	15.89*	15.75	11.80*	11.54			11.74*	11.52	7.51

LIFTING CAPACITIES
DX530LC-7K

TRACK WIDTH: 3490 MM • W/O BUCKET

(UNIT: 1000 KG)

A	3.0 m		4.5 m		6.0 m		7.5 m		9.0 m		Max. reach		
B													A
Boom 6.3 m • Arm 2.4 m • Shoe 600 mm • Counterweight 11.1 t													
7.5 m											14.15*	14.15*	6.84
6.0 m					15.27*	15.27*	14.00*	12.52			13.93*	11.89	7.74
4.5 m					17.15*	16.99	14.67*	12.24			13.99*	10.54	8.28
3.0 m					19.17*	16.24	15.62*	11.88			14.21*	9.92	8.51
1.5 m					20.56*	15.70	16.34*	11.58			14.53*	9.82	8.47
0.0 m			27.81*	23.55	20.86*	15.44	16.43*	11.42			14.90*	10.25	8.15
-1.5 m			25.85*	23.68	19.87*	15.44	15.27*	11.47			15.20*	11.43	7.52
-3.0 m	27.77*	27.77*	22.09*	22.09*	16.90*	15.73					15.14*	14.20	6.48

TRACK WIDTH: 3900 MM • W/O BUCKET

Boom 6.3 m • Arm 2.9 m • Shoe 600 mm • Counterweight 11.1 t													
7.5 m											12.66*	12.66*	7.36
6.0 m							13.12*	13.12*			12.50*	12.50*	8.20
4.5 m			20.82*	20.82*	16.23*	16.23*	13.99*	13.99*			12.81*	11.38	8.71
3.0 m					18.45*	18.45*	15.10*	13.92			13.32*	10.77	8.93
1.5 m					20.14*	18.68	16.03*	13.57			13.68*	10.68	8.89
0.0 m			28.23*	28.23*	20.83*	18.31	16.41*	13.35			14.10*	11.10	8.59
-1.5 m	25.30*	25.30*	26.84*	26.84*	20.30*	18.22	15.83*	13.30			14.52*	12.23	7.99
-3.0 m	31.42*	31.42*	23.75*	23.75*	18.14*	18.14*					14.77*	14.75	7.03
-4.5 m			17.71*	17.71*							14.18*	14.18*	5.49
Boom 7.1 m • Arm 2.9 m • Shoe 600 mm • Counterweight 11.1 t													
9.0 m											11.78*	11.78*	7.38
7.5 m							11.84*	11.84*			11.12*	11.12*	8.50
6.0 m					14.22*	14.22*	12.49*	12.49*	11.64*	10.89	10.93*	10.43	9.23
4.5 m					16.40*	16.40*	13.58*	13.58*	12.04*	10.70	11.08*	9.55	9.68
3.0 m					18.55*	18.55*	14.73*	13.58	12.60*	10.46	11.54*	9.12	9.88
1.5 m					19.95*	18.06	15.63*	13.20	13.05*	10.25	11.97*	9.04	9.85
0.0 m			18.79*	18.79*	20.34*	17.76	16.01*	12.96	13.14*	10.12	12.18*	9.32	9.58
-1.5 m			25.44*	25.44*	19.75*	17.70	15.67*	12.90	12.47*	10.13	12.35*	10.07	9.05
-3.0 m	28.38*	28.38*	22.87*	22.87*	18.09*	17.86	14.23*	13.02			12.36*	11.59	8.21
-4.5 m	22.68*	22.68*	18.60*	18.60*	14.65*	14.65*					11.84*	11.84*	6.95
Boom 7.1 m • Arm 3.35 m • Shoe 600 mm • Counterweight 11.1 t													
9.0 m							11.14*	11.14*			8.66*	8.66*	7.92
7.5 m							11.14*	11.14*			8.23*	8.23*	8.96
6.0 m							11.88*	11.88*	11.07*	10.99	8.11*	8.11*	9.66
4.5 m			20.84*	20.84*	15.59*	15.59*	13.03*	13.03*	11.60*	10.77	8.22*	8.22*	10.09
3.0 m			21.39*	21.39*	17.86*	17.86*	14.28*	13.66	12.25*	10.49	8.55*	8.55*	10.28
1.5 m			16.84*	16.84*	19.52*	18.14	15.31*	13.23	12.82*	10.25	9.13*	8.52	10.25
0.0 m			21.19*	21.19*	20.23*	17.74	15.87*	12.94	13.08*	10.08	10.07*	8.75	9.99
-1.5 m	17.04*	17.04*	26.23*	26.23*	19.96*	17.62	15.78*	12.82	12.77*	10.03	11.61*	9.38	9.49
-3.0 m	26.21*	26.21*	23.99*	23.99*	18.66*	17.71	14.75*	12.89			11.96*	10.63	8.69
-4.5 m	25.84*	25.84*	20.25*	20.25*	15.89*	15.89*	11.80*	11.80*			11.74*	11.74*	7.51

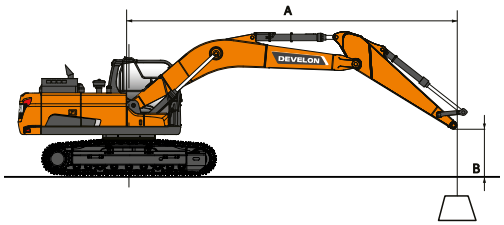

: Rating over front.
: Rating over side or 360°.

1. Lifting capacities are in compliance with ISO 10567:2007(E).
2. The load point is at the end of the arm.
3. * = The nominal loads are based on hydraulic capacity.
4. The nominal loads shown do not exceed 75% of tipping loads or 87% of hydraulic lifting capacity.
5. For lifting capacity with bucket, simply subtract the actual weight of the bucket from the values.
6. The configurations indicated do not necessarily reflect the standard equipment of the machine.

STANDARD AND OPTIONAL EQUIPMENT

● Standard ○ Optional

Engine

- ● Scania DC13, Stage V compliant, SCR, and DOC and DPF post treatment
- ● Variable Turbo Charger and air-to-air intercooler
- ● Auto-idle function
- ● Auto shut-off

Hydraulic system

- ● Boom and arm flow regeneration
- ● Swing anti-rebound valves
- ● Spare ports (valve)
- ● Flow and pressure adjustment for auxiliary lines from the cab
- ● One-touch power boost function
- ● Smart Power Control (SPC3)
- ● 2 way auxiliary hydraulic line and breaker piping (pedal & joystick controled)
- ● Cylinder cushioning & contamination seals
- ● Reversible fan

Cab & Interior

- ● Pressurised, sound-insulated and CabSus mounted cab
- ● Heated, adjustable air suspension seat with adjustable headrest and armrests
- ● Air conditioning with climate control
- ● Pull-up type front window with sun roller blind and removable lower front window
- ● Sliding left window
- ● Intermittent upper and lower windshield parallel wiper
- ● Rain visor
- ● Rear window defroster switch
- ● Adjustable PPC wrist control levers for arm, boom, bucket and swing
- ● Joysticks and pedals provide proportional control of auxiliary lines for attachments
- ● Travel pedals with hand levers
- ● Jog shuttle switch
- ● 8” color LCD touch-enabled gauge panel
- ● Attachment management system
- ● Engine speed (RPM) control dial
- ● Automatic travel speed
- ● 4 operating modes & 4 working modes
- ● Electric horn
- ● Ceiling light
- ● Cup holders
- ● Multiple storage compartments (e.g. document holder under seat)
- ● Storage area (tools, etc.)
- ● Hot and cool box
- ● Flat, spacious, easy-to-clean floor
- ● Keyless start (Develon Smart Key) & remote door lock/unlock
- ● Anti-theft protection
- ● 12 V power socket and USB ports
- ● Serial communication port for laptop PC interface
- ● Remote radio ON/OFF switch
- ● Loudspeakers and connections for radio
- ● Radio + MP3 (stereo) with Bluetooth streaming and handsfree call system
- ○ Heated and cooled, adjustable air suspension seat with adjustable headrest and armrests

Safety

- ● Roll Over Protective Structure (ROPS)*
- ● Boom and arm cylinder safety valves
- ● Overload warning device
- ● Large guard rails on upper structure and steps
- ● Rotating beacon
- ● Around View Camera 360°
- ● Punched metal anti-slip plates
- ● Hydraulic safety lock lever
- ● Safety glass
- ● Hammer for emergency escape
- ● Right and left rear-view mirrors
- ● Lockable fuel cap and covers
- ● Battery cut-off switch
- ● Engine restart prevention system
- ● Parking brake
- ● Light Pack (4 front & 2 rear work lights on the cab)
- ● LED lights pack: 11 powerful LED lights
- ● Emergency engine stop switch and hydraulic pump control switch
- ○ FOGS cab - top and front cab guards (ISO 10262)
- ○ Front window upper and lower guards
- ○ Ultrasonic detection
- ○ 2 extra LED lights

Other

- ● DX420LC-7K: Boom: 6700 mm – arm: 3250 mm – counterweight: 8000 kg
- ● DX490LC-7K: Boom: 7100 mm – arm: 3350 mm – counterweight: 8500 kg
- ● DX530LC-7K: Boom: 6300 mm – arm: 2900 mm – counterweight: 11100 kg
- ● DEVELON Fleet Management Web Telematic system
- ● Auto shut-off fuel filler pump
- ● Double element air cleaner and pre-filtered Cyclone Turbo dust separator
- ● Fuel pre-filter with water separator sensor
- ● Dust screen for radiator/oil cooler
- ● Hydraulically-driven oil cooler fan
- ● Self-diagnostic function
- ● Alternator (28 V, 100 A) - Battery (2 × 12 V, 200 Ah)
- ● Hydrostatic 2-speed travel system with automatic shift
- ● Remote greasing for swing circle and work group pivot points
- ● Double pump flow
- ○ DX420LC-7K:
  - Arms: 2.60 m, 2.95 m, 3.95 m or 3.25 HD (only with 6.7 m HD boom)
  - Booms: 6.7 m HD
- ○ DX490LC-7K:
  - Arms: 2.40 m, 2.90 m, 3.35 HD or 3.98 m
  - Booms: 6.30 or 7.10 m HD
  - Counterweight: 9200 kg (for 6.3 m boom)
- ○ DX530LC-7K:
  - Arms: 2.40 m, 3.35, 3.35 HD, 3.98 m, 6.00 m Semi SLR or 8.00 m SLR
  - Booms: 7.10 m, 7.10 m HD, 9.00 m Semi SLR or 11.00 m SLR
- ○ Heavy-duty bottom cover
- ○ Develon buckets: full range of GP, HD & rock buckets
- ○ Develon breakers and Develon quick-couplers
- ○ Hydraulic piping for quick-coupler, tilting and rotating bucket
- ○ Additional filter for breaker piping
- ○ Floating boom
- ○ Diesel heater
- ○ Oil-washed air cleaner
- ○ Straight travel pedal
- ○ Automatic lubrication system
- ○ Alarm for travel & swing

Undercarriage

- ● Hydraulic and spring track adjusters
- ● Normal track guards
- ● Greased and sealed track links
- ● 600 mm triple grouser shoe
- ○ Full-length track guards
- ○ Double track guards (only for DX420LC-7K)
- ○ 600 mm double grouser shoe
- ○ 750 mm, 800 mm, 900 mm triple grouser shoe
- ○ Narrow variable track under 3 m

*certified to 50 t operating weight

Powered by **Innovation**

DISCOVER MORE:
DX420LC-7K

DX490LC-7K

DX530LC-7K

DEVELON

DOOSAN Infracore Europe s.r.o.
IBC - Pobřežní 620/3, 186 00 Praha 8-Karlín
Czech Republic

©2023 DEVELON D4600694-EN (05-23)

Certain specification(s) are based on engineering calculations and are not actual measurements. Specification(s) are provided for comparison purposes only and are subject to change without notice.
Specification(s) for your individual Develon equipment will vary based on normal variations in design, manufacturing, operating conditions, and other factors. Pictures of Develon units may show other than standard equipment.