9 Series

Crawler Excavators

DX360LC-9

Operating weight:	37 180 kg
Engine power:	227 kW / 304.4 hp
Bucket capacity:	2.0 m^3

DX400HD-9

Operating weight:	42 160 kg
Engine power:	254 kW / 340.6 hp
Bucket capacity:	2.2 m^3



DEVELON

DEVELON

Since 1937, Develon continues to innovate, driving change in construction equipment as South Korea's leading brand.

Bold
We push the limits of performance, safety, and user experience—delivering machines that don't just meet expectations but exceed them.

Smart
Our advanced technology and engineering expertise drive efficiency, productivity, and sustainability in every machine we build.

Collaborative
By listening, adapting, and innovating alongside our customers and partners, we create solutions that move industries forward.

Develon: Powered by Innovation
With a bold vision, smart execution, and a collaborative spirit, Develon continues to lead the way—building the future, one breakthrough at a time.

We are Develon.

Develon is a bold name that reflects our core ambition to continue developing onwards and to make a positive mark on our world. Moving forward, we will continue providing innovative products and solutions that advance the world we live in today.



Break New Ground

with 9 Series Crawler Excavators

Unmatched Productivity

- Improved performance delivers up to a 7% increase in engine output and a 10% improved fuel efficiency.
- Smart Breaker and the onboard weighing system enhance efficiency and precision.

Smart Safety Features

- Smart AVM enables object and human recognition.
- Enhanced stability is achieved with a heavier counterweight and Advanced Lift Assist.
- The virtual wall ensures secure operation in any environment.
- E-Stop automatically shuts down the machine when a person is detected within 4 meters of the working zone.

↑1000 hours

Lower Ownership Costs

- Extended maintenance intervals, increased from 500 to 1 000 hours, boost productivity and reduce long-term costs.

More Comfort and Convenience

- The spacious new cabin features a larger 12.8" display, an optional second display, a full electronic joystick, improved lighting, and a digital key.
- Advanced assist systems streamline operation.
- A new stick steer / thumb wheel steer functionality allows operators to move the excavator whilst keeping their hands on the joystick.

The all-new Develon DX360LC-9 and DX400HD-9 crawler excavators combine powerful lifting, stability, and heavy-duty capability for demanding applications. Ranging from 37 to 42 tons, they offer Develon's advanced 9 Series features in productivity, safety, operator convenience, and versatility.

Achieve the Next

Machine Efficiency at its Best

9 Series Develon crawler excavators combine the all-new in-house DX08 Develon engine for heavy-duty performance, with advanced FEH and smart assist features for fuel-efficient, operator-friendly productivity.

The 9 Series provides the flexibility to match performance to any site. Across the lineup, an in-house developed swing device, multiple track shoe options, and a robust undercarriage ensure continuous durability and reliability.

- DX360LC-9: Optimised for earthmoving and versatile applications, featuring high hydraulic flow, a 2.0 m^3 bucket, and upper-class boom lifting cylinders.
- DX400HD-9: Built for the toughest environments with best-in-class power, a heavy-duty undercarriage, boom and arm, upper-class boom lifting cylinders, and a long 4 230 mm wheelbase.

The result is a durable, job-ready lineup engineered to maximise uptime, productivity, and overall value.

Productivity › Powerful Engine › Fuel-Saving FEH › Weighing System › Smart Breaker



Smarter Performance, Lower Costs

With the new Develon DX08 engine and advanced FEH system, you'll get the best Develon has to offer — powerful performance, fuel savings, and reduced wear for maximum productivity and efficiency.

↑10%

Increased Productivity
The new all-new in-house DX08 Develon engine (Stage V compliant) boosts productivity with its powerful performance, impressive operating weight, and class-leading digging and lifting capacities. Its auto shut-off reduces idle time and wear, while the engine's advanced design enhancements increase productivity by 10%, maximising efficiency on every job.

↑10%

Improved Fuel Efficiency
The full electro-hydraulic control (FEH) system, featuring electronic pumps, main control valves (MCV), and relief control valves (RCV), is designed to improve efficiency, helping reduce fuel costs and minimise environmental impact.

Operators at Their Best

Enjoy new assist systems designed to boost productivity and simply make the job easier. These features, built specifically for Develon machines, enhance efficiency, reduce fatigue, and provide effective solutions for improved performance.

Weighing System
A weighing system helps operators easily monitor production levels and manage volumes, ensuring dump trucks are loaded to their optimal capacities. By preventing overloading, it simplifies weight compliance, making the operator's job more efficient and stress-free.

Smart Breaker
Our Smart Breaker prevents blank firing, reducing wear on the machine and its components while minimizing operator fatigue for a more comfortable and efficient experience. With auto breaker, constant button pressing is eliminated, ensuring smoother operation.

The performance improvements in the latest 9 Series are measured against the previous 7 Series.

Safety That Goes the Extra Mile

Develon sets new safety standards with advanced technologies inspired by the car industry, bringing innovation and reliability to the construction sector.

From the Smart AVM, which provides a 360-degree view of the job site, to Advanced Lift Assist, which actively monitors lifting capacity and potential tipping hazards, these unique, market-leading features are designed to maximise operator safety and provide peace of mind, no matter how challenging the job site may be.

Safety › Smart AVM & HDS › Integrated
E-Stop › Virtual Wall › Advanced Lift Assist

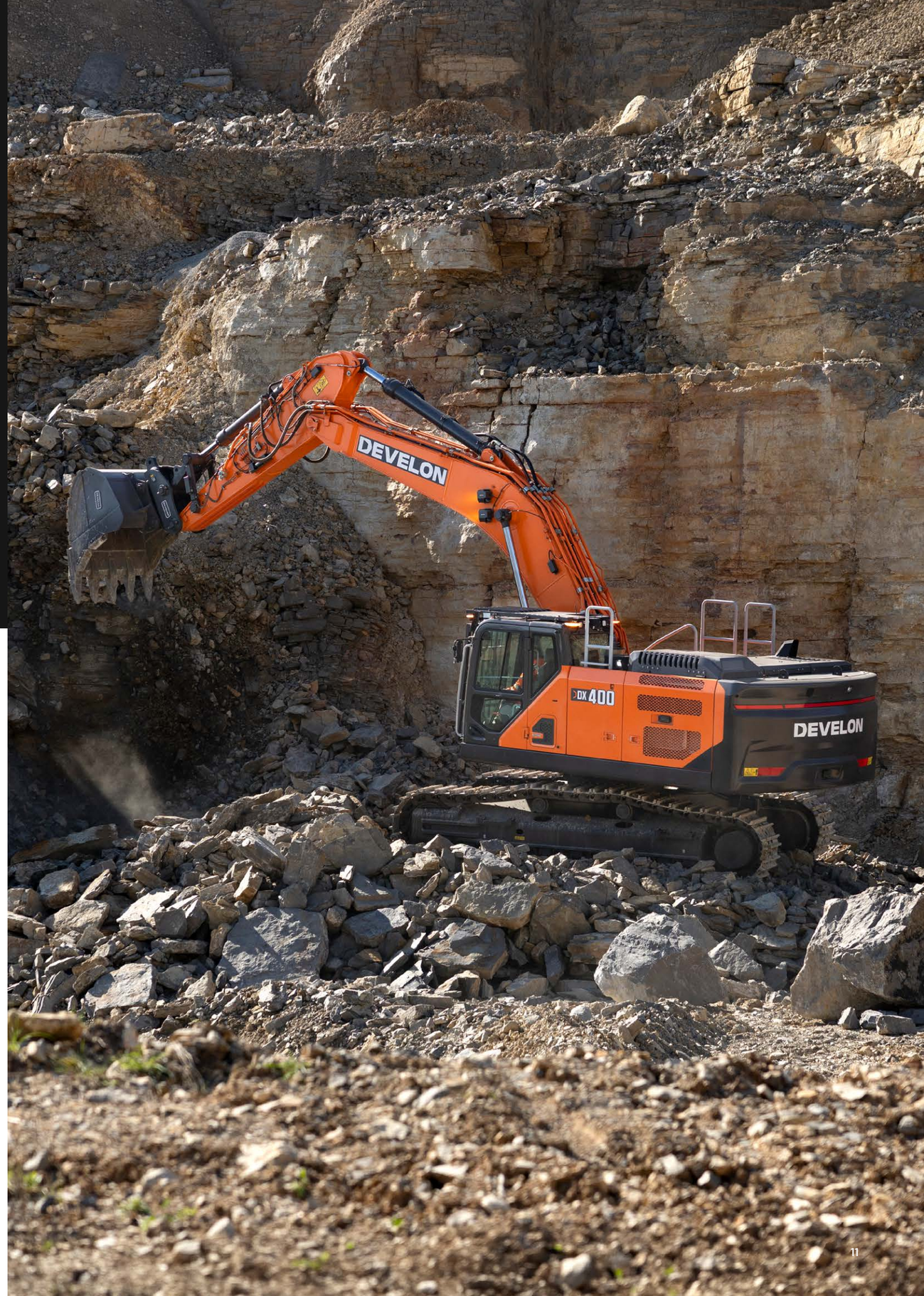

Protect What Matters

Develon machines put safety first, with smart features that keep you protected every step of the way. With improved stability, real-time hazard alerts, and intuitive features, you can feel confident and secure on the job.

Set Your Boundaries

- Our virtual wall feature keeps operations safe by limiting the machine's movement to specific areas and reducing the chance of collisions.
- Ideal for tight urban spaces or underground sites with obstacles like wires and pipes, safety zones let operators work with confidence.
- It is possible to set up the maximum height, maximum depth, maximum reach, and swing angles.

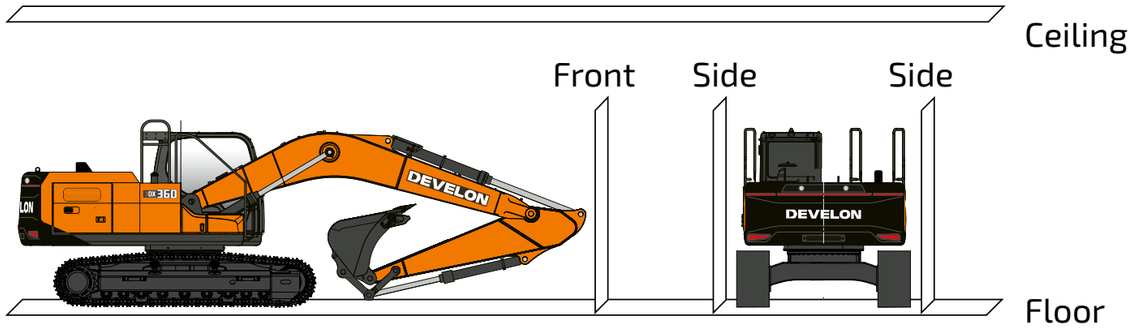



Stay One Step Ahead

Smart AVM & HDS

- The Smart AVM and the Human Detection System (HDS) are market-leading systems that use six cameras, radar sensors, and AI-powered object detection to provide a full 360-degree view around the machine.

Integrated E-Stop

- Our advanced E-Stop system takes jobsite safety to the next level and helps reduce risks in high-traffic zones by combining the Human Detection System (HDS) with intuitive emergency stop technology. Powered by Smart AVM and upgraded radar sensors, E-Stop monitors a 330-degree field of view and detects objects and people up to 6 meters away.
- When a person is detected, the system delivers both visual and audible alerts to the operator. As the machine approaches within 6 meters, it automatically slows down. If the distance closes to 4 meters, the E-Stop system brings the machine to a complete stop.



Rock-Solid Stability

Advanced Lift Assist

- Advanced Lift Assist improves operator safety by actively showing the machine's current lifting capacity and alerting operators to potential tipping hazards.
- This industry-first feature utilizes a lifting force table to highlight risk zones on the gauge panel during maneuvers and on inclines. Especially valuable for large companies with frequent operator machine changes, it ensures consistent safety across all equipment.

Certified Cab Protection

- Built for confidence in tough working conditions, the cab features ROPS and FOPS-certified structures, rigorously tested to protect the operator in the event of a roll-over or falling debris, including up to Level 2 FOPS standards. An optional new FOGS guard adds another layer of protection and opens to 95° without tools, making front window cleaning quick and easy.

Versatile, Smooth, and Ready

The 9 Series crawler excavators put operators first, with a spacious, low-vibration cabin, intuitive machine controls with customisable joysticks and smart guidance, as well as easy maintenance to boost comfort, versatility, and productivity.

4 Work Modes & 4 Power Modes
The operator can easily optimise performance with these selectable modes:

- 4 Work Modes: 1-way, 2-way, digging, and lifting modes, each designed for specific tasks.
- Tilt Rotator Settings: tailored for precision and minimizing back pressure during operation.
- 4 Power Modes: eco, standard, power, and power plus, all featuring smart power control to balance power and fuel efficiency.

Fine Swing Function (Optional)
Our in-house developed Fine Swing function smooths out the swing motion, reducing shaking when starting or stopping. This makes the operation safer, preventing objects from falling off the excavator. It also ensures a smooth stop by controlling swing speed and eliminating jolts during direction changes.

Machine Guidance 2D & Smart Control 2D (Optional)
Develon's Machine Guidance 2D and Smart Control 2D systems are designed to make your job easier and are upgradable to 3D for even greater accuracy, smoother workflows, and higher efficiency in complex jobs. These smart technologies provide precise guidance and grade control, helping you work more efficiently.

Operator Convenience & Versatility › Machine Guidance 2D & Smart Control 2D › New Cabin › Effortless Maintenance

Conquer the Day with Comfort

The new cabin offers one of the most spacious and ergonomic environments in the industry, designed to maximize operator comfort and productivity. With a cabin that reduces vibrations, enhances safety, and increases overall efficiency, this design provides a truly convenient and comfortable experience for operators.

New Operator Compartment

- A spacious cabin offering excellent visibility and enhanced lighting, including ambient light, creating a comfortable environment for long shifts.
- With 10 color options available, operators can customise the atmosphere to suit their preferences, especially during late-night tasks. Plus, the lighting adjusts according to the selected work mode, providing intuitive task recognition without distractions.

12.8" High-Resolution Monitor

- The large 12.8-inch high-resolution display provides operators with an engaging, easy-to-use interface to access machine information and manage various functions.
- Customisable to suit personal preferences, the screen allows operators to split it for improved multitasking. For enhanced efficiency, a dual monitor option is also available, enabling up to four screen splits to streamline workflow and boost operational performance.

New Joystick

- The newly designed joystick offers operators the ability to personalise controls for maximum comfort and ease. It enhances movement control with features like stick steer and thumb wheel steer, in addition to traditional levers and pedals.
- This flexibility ensures maximum customisation to fit any operator style and make any task easier to manage, thanks to new standard settings such as operator profile, joystick sensitivity, and attachment priority.

Comfortable Heated & Cooled Seat

- A heated seat with a built-in cooling function for ultimate comfort during long shifts.

Digital Key (Optional)

- Develon's Digital Key uses Bluetooth Low Energy technology to replace the need for a physical key with secure smartphone-based access through the My Develon app. With your phone in hand, you can unlock the cab and start the engine for a more seamless and convenient operating experience.

Get More Out of Your Machine

Develon machines are designed for easy maintenance, with extended service intervals and accessible components, helping you save time and money.

Prognostics and Health Management (PHM)

- Develon's latest models feature advanced PHM technology, continuously monitoring critical components like hydraulic oil, engine oil, and main pumps. This smart system predicts maintenance needs, allowing for timely interventions that minimize downtime and lower service costs.
- With remote diagnostics, operators gain real-time insights and faster issue detection, keeping equipment running at peak performance.

Easy Maintenance

- Large guardrails, anti-slip steps, and plates provide safe access to the upper structure.
- The air conditioning filter is easily accessible with a lockable cover, while the battery cut-off switch allows for easy disconnection during long-term storage.
- Engine parts and filters are easy to access for quick maintenance, with shut-off valves to help prevent leaks.
- An electric transfer pump makes priming fuel filters simple, while fine mesh on the side doors and cooler improves cooling and reduces upkeep.
- Greasing points are centralized, and an automatic lubrication system is available* for added convenience.

Extended Maintenance Intervals

- Develon sets the standard for extended maintenance intervals, offering engine oil and filter changes at 1 000 hours—twice as long as typical competitors. Hydraulic oil changes can last up to 4 000 hours, minimizing downtime and lowering maintenance costs. Oil sampling needs to be performed at regular intervals during the warranty period.

Maintenance Intervals

	DX360LC-9	DX400HD-9
Engine Oil & Filter	1 000 h	
Pre/Main Fuel Filter	1 000 h	
Hydraulic Oil Return Filter	1 000 h	
Air Conditioner Filter	1 000 h	
Air Cleaner Filter	2 000 h	
Engine Coolant	6 000 h	
Hydraulic Oil	4 000 h	
DEF Filter	4 500 h or 3 years	

Please note that automatic lubrication system may be standard in some regions.

My Develon › Management on the Jobsite › Work Efficiency Management › Proactive Service › Preventive Maintenance & Prolonged Uptime



Monitor Your Equipment From Anywhere

To compete and succeed, your equipment must maximise jobsite productivity and profitability. Develon machines do both. To ensure a high return on investment, we include more premium features as standard on every model. By making them standard, Develon gives you a competitive edge, helping operators work more efficiently and enhancing safety during long days in the field.

Telematics Terminal
A terminal device is installed and connected to a machine to capture machine data.

Telecommunication
Develon offers dual-mode communication (mobile and satellite) for maximum coverage.

My Develon
Stay informed with My Develon — the digital platform that consolidates all equipment information and digital services in one place for quick and easy access.

Operation Hours	Total operating hours and hours by mode
Fuel Efficiency*	Fuel levels and consumption
Reports & Location	Operation report and utilisation, GPS, and geofencing
Warnings & Alerts	Detect machine warnings, antenna disconnections, and geo/time fence breaches
Filter & Oil Management	Preventive maintenance through scheduled part replacements

Features may not be present in all models. Please contact your sales representative for more information on this feature.

DX360LC-9
Technical Specifications

Engine

Designed to deliver superior performance and best-in-class fuel efficiency, the in-house developed Develon DX08 diesel engine fully meets the latest Stage V emission regulations. To optimise machine performance, it features high-pressure fuel injectors, twin turbo chargers with air-to-air intercooler, and electronic engine controls. It also includes a 4-cycle water-cooled system, and common rail direct injection.

Model	DX08
Number of cylinders	6
Rated power, net (at 1 800 rpm)	224 kW / 300.4 hp (SAE J1995)
Rated power, gross (at 1 800 rpm)	227 kW / 304.4 hp (SAE J1995)
Maximum torque (at 1 300 rpm)	1 230 Nm
Displacement	7.5 l
Batteries — alternator	2 x 12 V, 150 Ah – 24 V, 90 A

Undercarriage

Built for durability, the undercarriage features an extremely robust construction made from high-quality materials. All welded structures are designed to minimise stress, ensuring long-lasting performance.

- Track rollers lubricated for life
- Idlers and sprockets fitted with floating seals
- Track shoes made of induction-hardened alloy with triple grouser
- Heat-treated connecting pins
- Hydraulic track adjuster with shock-absorbing tension wheel

Upper rollers	2
Upper roller diameter	142 mm
Lower rollers	9
Lower roller diameter	180 mm
Number of links & shoes per side	48
Pin diameter	44.75 mm
Link pitch	215.9 mm
Track gauge std. / narrow	2 680 / 2 400 mm
Tumbler distance	4 040 mm

Track Shoe

Shoe width (mm)	Ground pressure (kgf/cm²)	Machine weight (ton)
Std. 600TG	0.71	37.180
Opt. 600DG	0.72	37.710
Opt. 700TG	0.62	37.720
Opt. 800TG	0.55	38.200
Opt. 900TG	0.50	38.500

Hydraulic System

The new model features a full electro-hydraulic (FEH) system that offers precise control through advanced software. Paired with the edge cloud computing (ECC) platform, the system allows for easy remote software updates, keeping it up to date with the latest features. The FEH system collects and analyzes real-time data to optimize efficiency and productivity, making it a smarter, more responsive system in any working condition.

Pumps	Type	Max. flow rate	Displacement
Main	Axial piston	2 x 360 l/min	200 ml/rev

Swing Mechanism

The swing mechanism features an axial piston motor that drives a 2-stage planetary reduction gear, fully immersed in oil for maximum torque.

- Swing bearing: single-row, shear-type ball bearing with an induction-hardened internal gear
- Internal gear and pinion: immersed in lubricant for enhanced durability and smooth operation

Swing Motor

Type	axial piston
Displacement	233.1 ml/rev
Crossover relief valve setting	294 bar
Max. supply flow (at 1 800 rpm)	322.13 l/min
Max. output torque	18.2 kN.m

Swing Performance

Max. torque (EFF=0.81)	145 kN.m
Max. speed (EFF=0.81)	9.9 rpm

Arm

	Length (mm)	Weight (kg)	Digging force (nom. / boost, kN)
Std. arm	3 200	1 939	(SAE) 173 / 183, (ISO) 177 /183
Short arm	2 600	1 840	(SAE) 212 / 225, (ISO) 218 /230
Long arm	3 950	2 164	(SAE) 147 / 155, (ISO) 149 / 158

Bucket force with standard bucket (nominal pressure / boost, kN)	(SAE) 220 / 232, (ISO) 245 / 259

Cab

The new Develon cabin offers unmatched comfort and productivity, featuring a spacious, ergonomic design with excellent visibility and customisable ambient lighting. A 12.8-inch high-resolution monitor provides easy access to machine functions, with options for split or dual screens. The newly designed joystick allows personalised control for smoother operation, while the comfortable, heated seat includes an optional cooling function. For enhanced safety, the cab is equipped with a Falling Object Guard System (FOGS, ISO 10262 Level II and SAE J1356), which can be opened and closed without tools, making front window cleaning quick and easy.

A-weighted emission sound pressure level at the operator's position, LpAd (ISO 6396:2008)	guaranteed: 69 dB(A) measured: 68 dB(A)
A-weighted sound power level, LwAd (2000/14/EC)	guaranteed: 106 dB(A) measured: 105 dB(A)

Drive

Each track is powered by an independent, 2-speed high-torque axial piston motor, coupled with a planetary reduction gearbox for optimal performance. Two levers/ foot pedals ensure smooth travel with counter-rotation on demand. The track frame protects the travel motor, brake, and planetary gears, while the multi-disc track brakes are spring-applied and hydraulically released for reliable stopping power. The machine can also be operated using the new joystick steering functionality.

Travel Motor

Type	axial piston, 2-speed
Displacement	282.6 / 174 ml/rev
Crossover relief valve setting	358 bar
Max. supply flow	330.8 l/min

Traveling Performance

Traveling speed (EFF=0.98)	3.7 / 6.0 km/h
Traction force (EFF=0.81)	363 / 223 kN
Gradeability	70% (35°)

DX360LC-9

Dimensions

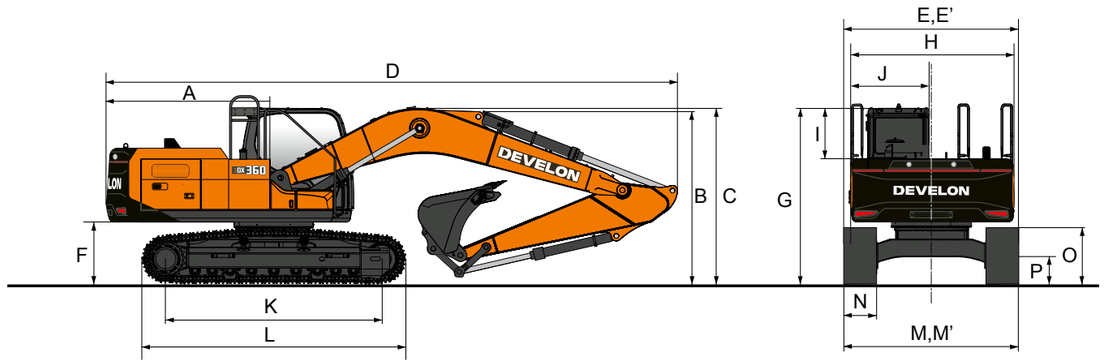

		Unit	Boom & standard arm 600 mm TG shoe	Standard boom & long arm 600 mm TG shoe
Boom length		mm	6 500	
Arm length		mm	3 200	3 950
Bucket size (SAE)		m^3	2.03	1.81
Tail swing radius	A	mm	3 530	
Shipping height (boom)	B	mm	3 316	3 444
Shipping height (hose)	C	mm	3 460	3 615
Shipping length	D	mm	11 312	11 342
Shipping width	E, E'	mm	3 280, 2 990 with narrow track	
Counterweight clearance*	F	mm	1 166	
Cabin height	G	mm	3 206	
Upper structure width	H	mm	2 990	
Cabin height above house	I	mm	1 607	
Cabin width	J	mm	1 015	
Tumbler distance	K	mm	4 040	
Overall track length	L	mm	4 958	
Undercarriage width	M, M'	mm	3 280, 2 990 with narrow track	
Track shoe width	N	mm	600	
Track height*	O	mm	973	
Car body clearance*	P	mm	472	

*Without shoe grouser

Working Range

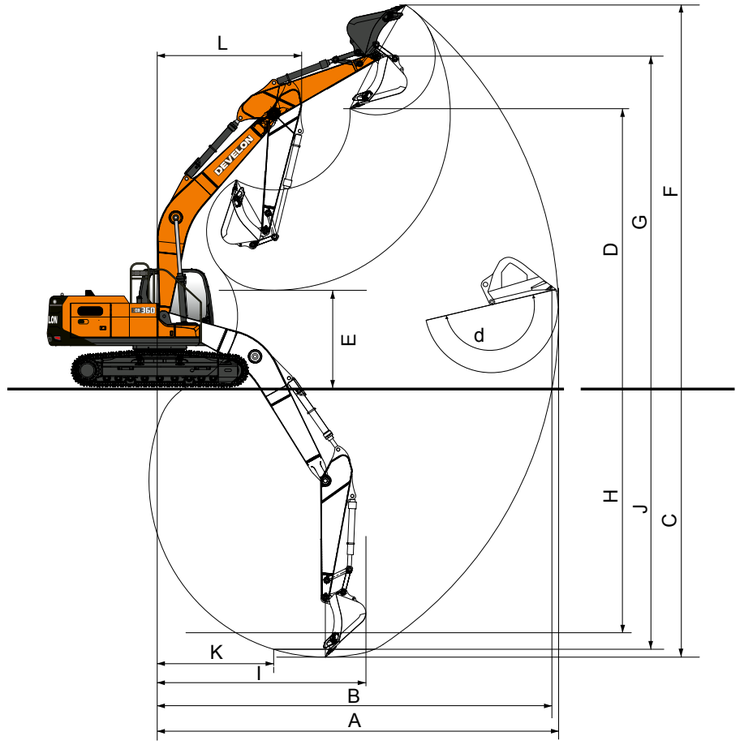

		Unit	Boom & standard arm 600 mm TG shoe	Standard boom & long arm 600 mm TG shoe
Boom length		mm	6 500	
Arm length		mm	3 200	3 950
Bucket size (SAE)		m^3	2.03	1.81
Counterweight		kg	7 300	
Track type			fixed	
Max. digging reach	A	mm	11 110	11 870
Max. digging reach (ground)	B	mm	10 920	11 690
Max. digging depth	C	mm	7 510	8 270
Max. loading height	D	mm	7 200	7 660
Max. digging height	E	mm	10 170	10 670
Max. bucket pin height	F	mm	8 840	9 300

		Unit	Boom & standard arm 600 mm TG shoe	Standard boom & long arm 600 mm TG shoe
Max. vertical wall depth	G	mm	5 820	6 760
Max. radius vertical	H	mm	7 860	7 950
Max. depth to 8' line	I	mm	7 330	8 130
Min. radius to 8' line	J	mm	3 350	3 430
Min. digging reach	K	mm	870	280
Min. swing radius	L	mm	4 450	4 510
Bucket angle (DEG)	d	deg	178	
Digging force, bucket*		kgf	26 411	
Digging force, arm*		kgf	18 661	16 112
Operating weight		kg	37 200	
Ground pressure		kg/cm^2	0.71	

*With power boost ON

DX360LC-9
Lifting Capacities

Articulated Boom W/O

Unit: kg

A	4.5 m		6.0 m		7.5 m		9.0 m		Max Reach (m)		
B											A
NLC Articulated Boom 6.5 m · Arm 3.2 m · Shoe 600 mm · Counterweight 7.3 t											
9.0 m	*13 740	*13 740							*12 390	10 900	5.77
7.5 m	*13 770	*13 770	*11 690	10 370					*10 720	7 490	7.23
6.0 m	*15 050	*15 050	*12 140	10 070	*10 340	7 020			*9 630	6 040	8.16
4.5 m			*12 990	9 530	*10 690	6 790			8 870	5 280	8.73
3.0 m			*13 790	8 910	*10 980	6 490	8 320	4 910	8 290	4 890	9.02
1.5 m			*13 990	8 430	10 740	6 220	8 210	4 800	8 140	4 770	9.05
0.0 m			*13 320	8 170	*10 440	6 060			*8 090	4 880	8.82
-1.5 m	*14 220	12 290	*11 710	8 120	*9 070	6 020			*7 330	5 300	8.31
-3.0 m	*10 590	*10 590	*8 910	8 260					*6 010	*6 010	7.47
LC Articulated Boom 6.52 m · Arm 2.6 m · Shoe 600 mm · Counterweight 7.3 t											
9.0 m	*13 740	*13 740							*12 390	12 190	5.77
7.5 m	*13 770	*13 770	*11 690	11 580					*10 720	8 370	7.23
6.0 m	*15 050	*15 050	*12 140	11 270	*10 340	7 850			*9 630	6 760	8.16
4.5 m			*12 990	10 710	*10 690	7 610			8 910	5 940	8.73
3.0 m			*13 790	10 070	*10 980	7 310	8 370	5 540	8 340	5 520	9.02
1.5 m			*13 990	9 580	10 800	7 040	8 250	5 430	8 180	5 390	9.05
0.0 m			*13 320	9 310	*10 440	6 860			*8 090	5 530	8.82
-1.5 m	*14 220	14 180	*11 710	9 260	*9 070	6 830			*7 330	6 000	8.31
-3.0 m	*10 590	*10 590	*8 910	*8 910					*6 010	*6 010	7.47

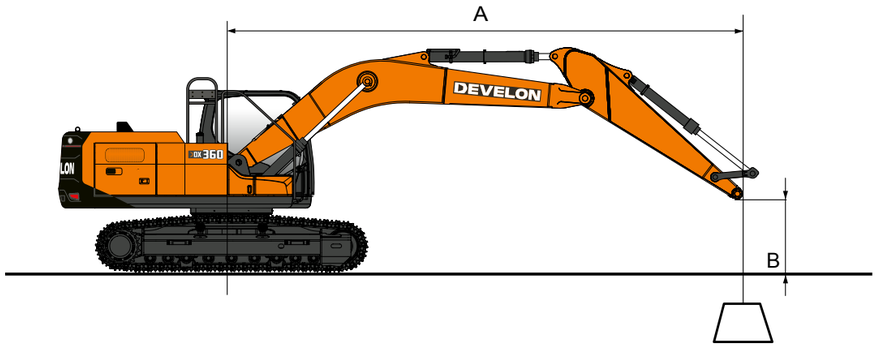

Mono Boom W/O

Unit: kg

A	1.5 m		3.0 m		4.5 m		6.0 m		7.5 m		9.0 m		Max Reach (m)		
B															A
NLC Mono Boom 6.5 m · Arm 3.2 m · Shoe 600 mm · Counterweight 7.3 t															
7.5 m									*8 030	7 280			*7 800	6 900	7.73
6.0 m									*8 160	7 200			*7 590	5 690	8.60
4.5 m					*12 570	*12 570	*10 060	9 790	*8 780	6 960	*8 150	5 180	*7 670	5 030	9.15
3.0 m					*15 970	13 830	*11 670	9 200	*9 610	6 660	8 400	5 050	7 810	4 690	9.42
1.5 m					*18 380	12 900	*13 070	8 700	*10 400	6 380	8 240	4 900	7 660	4 560	9.45
0.0 m					*19 140	12 510	*13 880	8 370	10 600	6 180	8 130	4 800	7 850	4 640	9.23
-1.5 m			*13 530	*13 530	*18 720	12 450	*13 940	8 240	10 500	6 090			8 440	4 970	8.75
-3.0 m	*16 330	*16 330	*22 040	*22 040	*17 310	12 570	*13 150	8 280	*10 150	6 140			*9 280	5 700	7.95
-4.5 m			*19 450	*19 450	*14 610	12 900	*11 040	8 520					*9 340	7 320	6.74
-6.0 m															
LC Mono Boom 6.5 m · Arm 3.2 m · Shoe 600 mm · Counterweight 7.3 t															
7.5 m									*8 030	*8 030			*7 800	7 680	7.73
6.0 m									*8 160	8 020			*7 590	6 350	8.60
4.5 m					*12 570	*12 570	*10 060	*10 060	*8 780	7 780	*8 150	5 800	*7 670	5 640	9.15
3.0 m					*15 970	15 760	*11 670	10 350	*9 610	7 470	8 440	5 660	7 850	5 260	9.42
1.5 m					*18 380	14 780	*13 070	9 830	*10 400	7 180	8 280	5 520	7 700	5 130	9.45
0.0 m					*19 140	14 380	*13 880	9 500	10 650	6 970	8 170	5 410	7 890	5 230	9.23
-1.5 m			*13 530	*13 530	*18 720	14 310	*13 940	9 360	10 550	6 880			8 490	5 610	8.75
-3.0 m	*16 330	*16 330	*22 040	*22 040	*17 310	14 440	*13 150	9 400	*10 150	6 930			*9 280	6 430	7.95
-4.5 m			*19 450	*19 450	*14 610	*14 610	*11 040	9 650					*9 340	8 260	6.74
-6.0 m															

= Rating over front
= Rating over side or 360°

1. Lifting capacity is based on ISO 10567.
2. Lifting capacity does not exceed 75% of tipping load with the machine on firm, level ground or 87% of full hydraulic capacity.
3. The lift-point is bucket pivot mounting pin on the arm (without bucket mass).
4. (*) indicates load limited by hydraulic capacity.

DX360LC-9
Standard & Optional Equipment

Engine

DX08 — Common rail 6-cylinder engine (7.5 l) with direct fuel injection and electronic control; 4 valves per cylinder; vertical injectors; water-cooled; twin-turbocharged with air-to-air intercooler	▪
Stage V compliant with selective catalyst reduction (SCR), diesel oxidation catalyst (DOC), and diesel particulate filter (DPF)	▪
Smart Power Control 3rd generation (SPC3)	▪
Rated power (net/gross, at 1 800 rpm): 224 / 227 kW (300.4 / 304.4 hp) (SAE J1995)	▪
Max torque: 1 230 Nm at 1 300 rpm	▪
2 × 12 V, 150 Ah batteries; alternator 24 V, 90 A	▪

Hydraulic

e-EPOS for optimized system efficiency in all working conditions and minimized fuel consumption	▪
Main pumps: 2 variable displacement axial piston pumps — max flow: 2 × 360 l/min	▪
Pilot pump: gear pump — max flow: 25 l/min	▪
Maximum system pressure: work 373 kg/cm², travel 358 kg/cm²	▪
Selection of 4 working modes and 4 power modes	▪
D-Eco power management system with FEH, including 2-pump flow	▪
Hydraulic flow and pressure rate controlled from the cab	▪
Boom and arm flow regeneration valves	▪
Boom and arm holding valves	▪
Hydraulic piping for breaker	▪
2 travel speeds: 3.7 / 6.0 km/h	▪
Turbo centrifugal air pre-cleaning	▪
PERO — low flow auxiliary hydraulic line for rotating or tilting tool (joystick control)	•

Frame

X-frame long track: width 3 280 mm with 600 mm shoes	▪
Hydraulic track adjuster with shock-absorbing tension mechanism	▪

Cab and Interior

Pressurized, sound-insulated, and CabSus-mounted cab	▪
New 12-inch Android color LCD gauge panel with touch-enabled display	▪
High-performance air conditioning with electronic climate control	▪
DAB radio with Bluetooth streaming and a hands-free system	▪
Sliding proportional control on joystick for auxiliary hydraulic lines	▪
USB port	▪
Stick steer (joystick steering functionality)	▪
Falling Object Guard System (FOGS) — standard ISO 10262 Level II and SAE J1356[1]	•
Straight travel pedal (only available with monoboom)	•
Heat wire for main mirror	•
Heated and cooled seat with 2-point seat belt	▪
Reversible cooling fan	•
Full smart package: Machine Guidance 2D, Smart Control 2D, virtual walls, weighing system, Smart AVM, HDS, and Advanced Lift Assist	•
Productivity package: Machine Guidance 2D, Smart Control 2D, weighing system, lift assist, virtual walls	•
Smart AVM	▪
HDS (Human Detection System) with around-view camera and radar	•
Emergency stop (E-Stop)	•
Smart Key with Digital Key (app)	•
Premium PHM (hydraulic oil and engine oil monitoring, including swing motor/reduction gear and main pump monitoring algorithm)	•
Additional 12-inch Android monitor	•

[1] If FOGS cab is ordered, rain shield is not delivered (not compatible)

Other

Narrow undercarriage: 2 990 mm with 600 mm shoes	•
Double track guards	•
Full-length track guards	•
Boom options: · 6 500 mm (heavy-duty, with 3 200 mm heavy-duty arm) · two-piece boom: 3 435 mm (lower) + 3 100 mm (upper)	•
Arm options: · 2 600 mm · 3 200 mm (heavy-duty) · 3 950 mm	•
Track shoe options: · 600 mm (double grouser) · 700 / 800 / 900 mm (triple grouser)	•
Air compressor	•
SKF automatic greasing system (may be standard depending on the region)	•
Side protector (for NLC version; increases transport width by 120 mm; easily removable)	•
Develon buckets: full range of general-purpose, heavy-duty, and rock buckets	•
Develon quick couplers	•
Hydraulic piping for crusher, quick coupler, and tilting/rotating buckets	•

Standard Configuration

Standard fixed undercarriage: 3 280 mm	▪
6.5 m boom — 3.2 m arm — 600 mm triple grouser shoes	▪
PE3C — 2-way auxiliary hydraulic line for opening/closing tool (electric CAN communication pedal & joystick)	▪
Breaker piping (1-way auxiliary hydraulic line including floating boom and Smart Breaker)	▪
Safety valves (boom & arm)	▪
Counterweight: 7.3 tons	▪
Light pack: full LED package with rotating beacon, alternators: 2 × 90 A, batteries: 2 × 12 V (24 V, 150 Ah)	▪
Quick coupler piping	▪
Transport dimensions: 11 312 (L) × 3 460 (H) × 3 280 (W) mm	▪
Operating weight: 37 180 kg	▪
Side mirror	▪
Fuel filling pump	▪
Mineral hydraulic oil ISO VG 46	▪
ROPS (Roll Over Protective Structure) — standard ISO 12117-2	▪
Separable guard rails — standard ISO 2867:2011	▪
Cab pack: sun visor, roof window, and rain shield	▪
Fully adjustable air suspension seat with heater	▪
Overload warning device	▪
Parallel wipers	▪
My Develon (telematics system)	▪
1-year warranty or 2 000 hours (whichever occurs first)	▪
Standard track guards	▪
Greased and sealed track links	▪

Standard = ▪
Optional = •

DX400HD-9
Technical Specifications

Engine

Designed to deliver superior performance and best-in-class fuel efficiency, the in-house developed Develon DX08 diesel engine fully meets the latest Stage V emission regulations. To optimise machine performance, it features high-pressure fuel injectors, twin turbo chargers with air-to-air intercooler, and electronic engine controls. It also includes a 4-cycle water-cooled system, and common rail direct injection.

Model	DX08
Number of cylinders	6
Rated power, net (at 1 800 rpm)	251 kW / 336.6 hp (SAE J1995)
Rated power, gross (at 1 800 rpm)	254 kW / 340.6 hp (SAE J1995)
Maximum torque (at 1 300 rpm)	1 460 Nm
Displacement	7.5 l
Batteries — alternator	2 x 12 V, 150 Ah – 24 V, 90 A

Undercarriage

Built for durability, the undercarriage features an extremely robust construction made from high-quality materials. All welded structures are designed to minimise stress, ensuring long-lasting performance.

- Track rollers lubricated for life
- Idlers and sprockets fitted with floating seals
- Track shoes made of induction-hardened alloy with triple grouser
- Heat-treated connecting pins
- Hydraulic track adjuster with shock-absorbing tension wheel

Upper rollers	2
Upper roller diameter	191 mm
Lower rollers	9
Lower roller diameter	200 mm
Number of links & shoes per side	50
Pin diameter	71.42 mm
Link pitch	215.9 mm
Track gauge std. / narrow	2 750 / 2 400 mm
Tumbler distance	4 230 mm

Track Shoe

Shoe width (mm)	Ground pressure (kgf/cm²)	Machine weight (ton)
Std. 600TG	0.76	41.710
Opt. 600DG	0.77	42.100
Opt. 700TG	0.65	42.200
Opt. 800TG	0.58	42.600
Opt. 900TG	0.52	43.100

Hydraulic System

The new model features a full electro-hydraulic (FEH) system that offers precise control through advanced software. Paired with the edge cloud computing (ECC) platform, the system allows for easy remote software updates, keeping it up to date with the latest features. The FEH system collects and analyzes real-time data to optimise efficiency and productivity, making it a smarter, more responsive system in any working condition.

Pumps	Type	Max. flow rate	Displacement
Main	Axial piston	2 x 360 l/min	200 ml/rev

Swing Mechanism

The swing mechanism features an axial piston motor that drives a 2-stage planetary reduction gear, fully immersed in oil for maximum torque.

- Swing bearing: single-row, shear-type ball bearing with an induction-hardened internal gear
- Internal gear and pinion: immersed in lubricant for enhanced durability and smooth operation

Swing Motor

Type	Axial piston swing motor
Displacement	233.1 ml/rev
Crossover relief valve setting	300 kg/cm²
Max. supply flow (at 1 800 rpm)	322.13 l/min
Max. output torque	18.2 kN.m

Swing Performance

Max. torque (EFF=0.81)	145 kN.m
Max. speed (EFF=0.98)	9.9 rpm

Arm

	Length (mm)	Weight (kg)	Digging force (nom. / boost, kN)
Std. arm	3 200	2 018	(SAE) 173 / 183, (ISO) 177 / 183
Short arm	2 600	1 871	(SAE) 212 / 225, (ISO) 218 / 230
Long arm	3 950	2 262	(SAE) 147 / 155, (ISO) 149 / 158

Bucket force with standard bucket (nominal pressure / boost, kN)	(SAE) 220 / 232 (ISO) 245 / 259

Cab

The new Develon cabin offers unmatched comfort and productivity, featuring a spacious, ergonomic design with excellent visibility and customisable ambient lighting. A 12.8-inch high-resolution monitor provides easy access to machine functions, with options for split or dual screens. The newly designed joystick allows personalized control for smoother operation, while the comfortable, heated seat includes an optional cooling function. For enhanced safety, the cab is equipped with a Falling Object Guard System (FOGS, ISO 10262 Level II and SAE J1356), which can be opened and closed without tools, making front window cleaning quick and easy.

A-weighted emission sound pressure level at the operator's position, LpAd (ISO 6396:2008)	guaranteed: 69 dB (A) measured: 68 dB(A)
A-weighted sound power level, LwAd (2000/14/EC)	guaranteed: 106 dB (A) measured: 105 dB(A)

Drive

Each track is powered by an independent, 2-speed high-torque axial piston motor, coupled with a planetary reduction gearbox for optimal performance. Two levers/ foot pedals ensure smooth travel with counter-rotation on demand. The track frame protects the travel motor, brake, and planetary gears, while the multi-disc track brakes are spring-applied and hydraulically released for reliable stopping power. The machine can also be operated using the new joystick steering functionality.

Travel Motor

Type	axial piston, 2-speed
Displacement	282.6 / 160.8 ml/rev
Crossover relief valve setting	365 kg/cm²
Max. supply flow	330.8 l/min

Traveling Performance

Traveling speed (EFF=0.98)	3.2 / 5.6 km/h
Traction force (EFF=0.81)	422.2 / 240 kN
Greadeability	70% (35°)

DX400HD-9

Dimensions

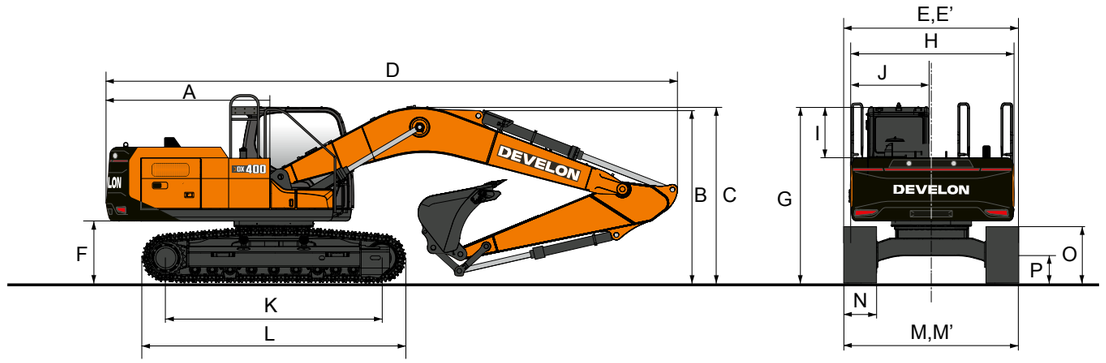

		Unit	Boom & standard arm 600 mm TG shoe	Standard boom & long arm 600 mm TG shoe
Boom length		mm	6 500	
Arm length		mm	3 200	3 950
Bucket size (SAE)		m³	2.22	1.81
Tail swing radius	A	mm	3 527	
Shipping height (boom)	B	mm	3 336	3 392
Shipping height (hose)	C	mm	3 458	3 528
Shipping length	D	mm	11 286	11 291
Shipping width	E,E'	mm	3 350, 2 990 with narrow track	
Counterweight clearance*	F	mm	1 277	
Cabin height	G	mm	3 317	
Upper structure width	H	mm	2 990	
Cabin height above house	I	mm	1 607	
Cabin width	J	mm	1 015	
Tumbler distance	K	mm	4 230	
Overall track length	L	mm	5 185	
Undercarriage width	M, M'	mm	3 350, 2 990 with narrow track	
Track shoe width	N	mm	600	
Track height*	O	mm	1 066	
Car body clearance*	P	mm	601	

*Without shoe grouser

Working Range

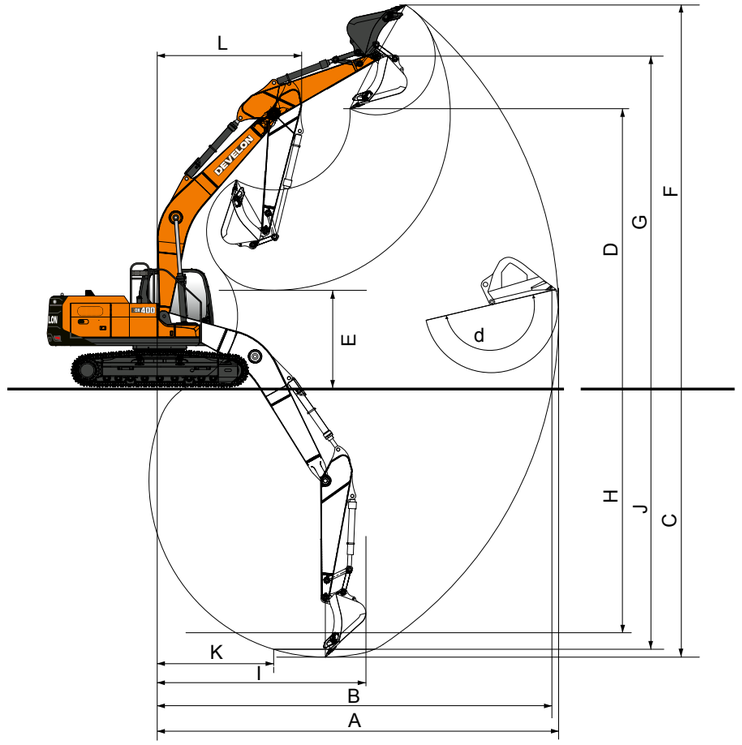

		Unit	Boom & standard arm 600 mm TG shoe	Standard boom & long arm 600 mm TG shoe
Boom length		mm	6 500	
Arm length		mm	3 200	3 950
Bucket size (SAE)		m3	2.22	1.81
Counterweight		kg	7 400	
Track type			fixed	
Max. digging reach	A	mm	11 110	11 870
Max. digging reach (ground)	B	mm	10 900	11 670
Max. digging depth	C	mm	7 400	8 160
Max. loading height	D	mm	7 310	7 770
Max. digging height	E	mm	10 290	10 790
Max. bucket pin height	F	mm	8 960	9 420

		Unit	Boom & standard arm 600 mm TG shoe	Standard boom & long arm 600 mm TG shoe
Max. vertical wall depth	G	mm	5 710	6 640
Max. radius vertical	H	mm	7 860	7 960
Max. depth to 8' line	I	mm	7 220	8 020
Min. radius to 8' line	J	mm	3 350	3 420
Min. digging reach	K	mm	700	-340
Min. swing radius	L	mm	4 450	4 510
Bucket angle	d	deg	178	
Digging force, bucket*		kgf	26 921	26 411
Digging force, arm*		kgf	18 661	16 112
Operating weight		kg	42 200	41 700
Ground pressure		kg/cm²	0.77	0.76

*With power boost ON

DX400HD-9
Lifting Capacities

Mono Boom W/O

Unit: kg

LC Mono Boom W/O 6.5 m · Arm 3.2 m · Shoe 600 mm · Counterweight 7.4 t

A	1.5 m		3.0 m		4.5 m		6.0 m		7.5 m		9.0 m		Max Reach (m)		
B															A
7.5 m									*9 330	8 990			*7 780	*7 780	7.80
6.0 m									*9 570	8 890			*7 600	7 000	8.65
4.5 m					*14 890	*14 890	*11 860	*11 860	*10 330	8 620	*9 090	6 460	*7 700	6 260	9.18
3.0 m					*18 850	17 460	*13 750	11 470	*11 310	8 300	9 700	6 320	*8 030	5 870	9.43
1.5 m					*21 320	16 480	*15 350	10 940	*12 220	8 000	9 540	6 170	*8 650	5 760	9.44
0.0 m					*21 960	16 090	*16 230	10 600	12 290	7 790	9 430	6 070	9 130	5 890	9.20
-1.5 m			*14 120	*14 120	*21 730	16 030	*16 250	10 480	12 190	7 700			9 870	6 330	8.70
-3.0 m	*16 890	*16 890	*22 790	*22 790	*20 030	16 190	*15 260	10 530	*11 770	7 770			*10 910	7 300	7.88
-4.5 m			*22 290	*22 290	*16 780	16 560	*12 660	10 810					*10 960	9 470	6.62
-6.0 m															

Mono Boom W/O

Unit: kg

LC Mono Boom 6.5 m · Arm 3.95 m · Shoe 800 mm · Counterweight 7.4 t

A	1.5 m		3.0 m		4.5 m		6.0 m		7.5 m		9.0 m		Max Reach (m)		
B															A
9.0 m									*6 410	*6 410			*6 090	*6 090	7.58
7.5 m													*5 680	*5 680	8.71
6.0 m									*8 560	*8 560	*7 520	6 820	*5 530	*5 530	9.48
4.5 m							*10 560	*10 560	*9 420	8 930	*8 780	6 690	*5 560	*5 560	9.96
3.0 m					*16 740	*16 740	*12 580	11 920	*10 520	8 560	*9 340	6 500	*5 740	5 330	10.19
1.5 m					*20 130	17 120	*14 460	11 290	*11 590	8 210	9 760	6 300	*6 090	5 220	10.20
0.0 m			*7 890	*7 890	*21 840	16 450	*15 730	10 840	*12 390	7 940	9 590	6 150	*6 670	5 310	9.98
-1.5 m	*8 350	*8 350	*12 630	*12 630	*22 040	16 220	*16 200	10 610	12 380	7 780	9 510	6 070	*7 610	5 640	9.52
-3.0 m	*13 490	*13 490	*18 720	*18 720	*21 020	16 260	*15 750	10 580	*12 310	7 760			*9 240	6 320	8.78
-4.5 m	*19 700	*19 700	*25 930	*25 930	*18 650	16 520	*14 110	10 740	*10 560	7 940			*10 110	7 710	7.68
-6.0 m			*19 020	*19 020	*14 040	*14 040	*9 870	*9 870					*9 850	*9 850	6.00

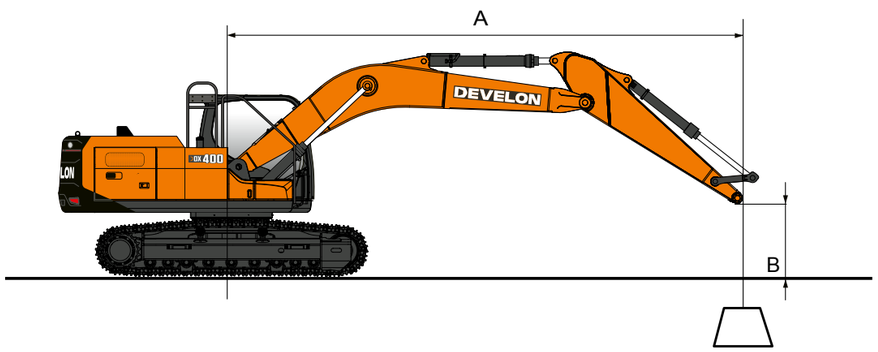

Mono Boom W/O

Unit: kg

NLC Mono Boom 6.5 m · Arm 2.6 m · Shoe 600 mm · Counterweight 7.4 t

A	3.0 m		4.5 m		6.0 m		7.5 m		Max Reach (m)		
B											A
7.5 m									*10 470	8 560	7.08
6.0 m					*11 330	10 940	*10 460	7 730	*10 370	6 940	8.01
4.5 m			*16 710	15 850	*12 890	10 440	*11 090	7 520	*10 450	6 110	8.57
3.0 m					*14 660	9 880	*11 960	7 240	9 980	5 690	8.85
1.5 m					*16 010	9 440	12 560	7 000	9 830	5 570	8.86
0.0 m			*20 850	13 740	*16 560	9 210	12 380	6 840	10 170	5 720	8.60
-1.5 m	*14 890	*14 890	*21 230	13 790	*16 190	9 160	12 350	6 820	11 150	6 220	8.06
-3.0 m	*24 500	*24 500	*19 010	14 010	*14 690	9 280			*11 760	7 370	7.17
-4.5 m	*18 920	*18 920	*14 900	14 450					*11 470	10 230	5.75

Mono Boom W/O

Unit: kg

NLC Mono Boom 6.5 m · Arm 3.2 m · Shoe 600 mm · Counterweight 7.4 t

A	1.5 m		3.0 m		4.5 m		6.0 m		7.5 m		9.0 m		Max Reach (m)		
B															A
7.5 m									*9 330	7 890			*7 780	7 350	7.80
6.0 m									*9 570	7 790			*7 600	6 120	8.65
4.5 m					*14 890	*14 890	*11 860	10 540	*10 330	7 540	*9 090	5 640	*7 700	5 450	9.18
3.0 m					*18 850	14 870	*13 750	9 930	*11 310	7 220	9 690	5 500	*8 030	5 100	9.43
1.5 m					*21 320	13 940	*15 350	9 410	*12 220	6 930	9 520	5 350	*8 650	4 990	9.44
0.0 m					*21 960	13 570	*16 230	9 090	12 270	6 730	9 410	5 250	9 120	5 090	9.20
-1.5 m			*14 120	*14 120	*21 730	13 520	*16 250	8 970	12 170	6 640			9 860	5 480	8.70
-3.0 m	*16 890	*16 890	*22 790	*22 790	*20 030	13 660	*15 260	9 030	*11 770	6 710			*10 910	6 310	7.88
-4.5 m			*22 290	*22 290	*16 780	14 020	*12 660	9 290					*10 960	8 170	6.62
-6.0 m															

= Rating over front
= Rating over side or 360°

1. Lifting capacity is based on ISO 10567.
2. Lifting capacity does not exceed 75% of tipping load with the machine on firm, level ground or 87% of full hydraulic capacity.
3. The lift-point is bucket pivot mounting pin on the arm (without bucket mass).
4. (*) indicates load limited by hydraulic capacity.

DX400HD-9
Standard & Optional Equipment

Engine

DX08 — Common rail 6-cylinder engine (7.5 l) with direct fuel injection and electronic control; 4 valves per cylinder; vertical injectors; water-cooled; twin-turbocharged with air-to-air intercooler	▪
Stage V compliant with selective catalyst reduction (SCR), diesel oxidation catalyst (DOC), and diesel particulate filter (DPF)	▪
Smart Power Control 3rd generation (SPC3)	▪
Rated power (net/gross, at 1 800 rpm): 251 / 254 kW (336.6 / 340.6 hp) (SAE J1995)	▪
Max torque: 1 460 Nm at 1 300 rpm	▪
2 × 12 V, 150 Ah batteries; alternator 24 V, 90 A	▪

Hydraulic

e-EPOS for optimized system efficiency in all working conditions and minimized fuel consumption	▪
Main pumps: 2 variable displacement axial piston pumps — max flow: 2 × 360 l/min	▪
Pilot pump: gear pump — max flow: 25 l/min	▪
Maximum system pressure: work 373 kg/cm², travel 358 kg/cm²	▪
Selection of 4 working modes and 4 power modes	▪
D-Eco power management system with FEH, including 2-pump flow	▪
Hydraulic flow and pressure rate controlled from the cab	▪
Boom and arm flow regeneration valves	▪
Boom and arm holding valves	▪
Hydraulic piping for breaker	▪
2 travel speeds: 3.2 / 5.6 km/h	▪
Turbo centrifugal air pre-cleaning	▪
PERO — low flow auxiliary hydraulic line for rotating or tilting tool (joystick control)	•

Frame

X-frame long track: width 3 350 mm with 600 mm shoes	▪
Hydraulic track adjuster with shock-absorbing tension mechanism	▪

Cab and Interior

Pressurized, sound-insulated, and CabSus-mounted cab	▪
New 12-inch Android color LCD gauge panel with touch-enabled display	▪
High-performance air conditioning with electronic climate control	▪
DAB radio with Bluetooth streaming and a hands-free system	▪
Sliding proportional control on joystick for auxiliary hydraulic lines	▪
USB port	▪
Stick steer (joystick steering functionality)	▪
Falling Object Guard System (FOGS) — compliant with ISO 10262 Level II and SAE J1356[1]	•
Straight travel pedal (only available with monoboom)	•
Heat wire for main mirror	•
Heated and cooled seat with 2-point seat belt	▪
Reversible cooling fan	•
Full smart package: Machine Guidance 2D, Smart Control 2D, virtual walls, weighing system, Smart AVM, HDS, and Advanced Lift Assist	•
Productivity package: Machine Guidance 2D, Smart Control 2D, weighing system, lift assist, virtual walls	•
Smart AVM	▪
HDS (Human Detection System) with around-view camera and radar	•
Emergency stop (E-Stop)	•
Smart Key with Digital Key (app)	•
Premium PHM (hydraulic oil and engine oil monitoring, including swing motor/reduction gear and main pump monitoring algorithm)	•
Additional 12-inch Android monitor	•

[1] If FOGS cab is ordered, rain shield is not delivered (not compatible)

Other

Narrow undercarriage: 2 990 mm with 600 mm shoes	•
Double track guards	•
Full-length track guards	•
Arm options: · 2 600 mm · 3 950 mm	•
Shoe options: · 600 mm (double grouser) · 700 / 800 / 900 mm (triple grouser)	•
Air compressor	•
SKF automatic greasing system (may be standard depending on the region)	•
Side protector (for NLC version; increases transport width by 120 mm; easily removable)	•
Develon buckets: full range of general-purpose, heavy-duty, and rock buckets	•
Develon quick couplers	•
Hydraulic piping for crusher, quick coupler, and tilting/rotating buckets	•

Standard Configuration

Standard fixed undercarriage: 3 350 mm	▪
6.5 m heavy-duty boom — 3.2 m heavy-duty arm — 600 mm triple grouser shoes	▪
PE3C — 2-way auxiliary hydraulic line for opening/closing tools (electric CAN communication via pedal and joystick)	▪
Breaker piping – 1-way auxiliary hydraulic line including floating boom and Smart Breaker	▪
Boom and arm safety valves	▪
Counterweight: 7.4 tons	▪
Light pack: full LED package with rotating beacon, alternators: 2 × 90 A, batteries: 2 × 12 V (24 V, 150 Ah)	▪
Quick coupler line	▪
Transport dimensions: 11 286 (L) × 3 458 (H) × 3 350 (W) mm	▪
Operating weight: 42 160 kg	▪
Side mirror	▪
Fuel filling pump	▪
Mineral hydraulic oil ISO VG 46	▪
ROPS (Roll Over Protective Structure) – standard (ISO 12117-2)	▪
Separable guard rails (ISO 2867:2011)	▪
Cab pack: sun visor, roof window, and rain shield	▪
Fully adjustable air suspension seat with heater	▪
Overload warning device	▪
Parallel wipers	▪
My Develon (telematics system)	▪
1-year / 2 000-hour warranty (whichever comes first)	▪
Standard track guards	▪
Greased and sealed track links	▪

Standard = ▪
Optional = •



Develon Warranty

Your Key to Equipment Protection and Peace of Mind

Keep your heavy construction equipment protected with Develon. Our comprehensive warranties and premium protection plans give you peace of mind, ensuring your investment stays safe and valuable for the road ahead.

Tailored Warranty Plans
Choose from a range of affordable protection plans, designed exclusively for Develon customers through our authorized dealers. These plans transform your machine's price into a strategic investment, not just an expense.

Develon Premium Protection
Opt for Develon Premium to experience unmatched security, reliability, and overall value. This top-tier plan shields your equipment from unexpected costs and minimizes downtime, letting you focus on what matters – getting the job done.

Act Now!
Get in touch with a Develon authorized dealer today to protect your equipment investment. With an easy process and lasting benefits, Develon helps keep your heavy construction equipment in top condition.

Choose Develon Extended Warranty: Play it Safe and Protect Your Investment.

** Offer may vary based on model.*

Powered by **Innovation**

DEVELON

DX360LC-9

DX400HD-9

Space for dealer's stamp

HD Construction Equipment Develon Europe s.r.o.
IBC – Pobrezni 620/3,
18600 Praha 8 – Karlin, Czechia

©2026 HD Construction Equipment Develon Europe s.r.o.
All rights reserved.

D4600907 (04/2026)

Certain specifications are based on engineering calculations and are not actual measurements. Specifications are provided for comparison purposes only and are subject to change without notice. Specifications for your individual Develon equipment will vary based on normal variations in design, manufacturing, operating conditions, and other factors. Pictures of Develon units may show equipment other than standard equipment.