DEVELON

Demolition Excavators

DX245DM-7
DX380DM-7
DX530DM-7



	DX245DM-7	DX380DM-7	DX530DM-7
Maximum power	173 hp	327 hp	394 hp
Operating weight	30.7 t	47.5 t	60.5/70.5 t
Max. tool weight	1.8 - 2.0 t	3.0 t	2.6 - 3.0 t
Max. height at pin	18 m	23 m	27.5/31 m

FROM DEMOLITION TO REINVENTION

SAFETY

Rear and side cameras and large side mirrors, powerful lighting, & anti-slip steps and platforms. Guard rails on upper structure. FOGS (Falling Object Guard Structure) cab with top and front cab guards (ISO 10262). Main protection for HRD boom piping are provided as standard.

TILTING CAB

The 30° titling cab provides better visibility and comfort and reduces fatigue during high elevation demolition work.

STABILITY SAFETY SYSTEM

The tipping limit is calculated according to the attached tool. The system warns with alarm when approaching the safety limit, and stops the movement of cylinders when the limit is reached. Hydraulic movement limitation can be disabled within each countries regulations.

BOOM JOINT SYSTEM

The modular boom design and hydraulic lock mechanism provide customers with a complete, flexible solution that allows them to use the same excavator for applications on-site in addition to demolition. (1)
The quick hitch enables faster change-over from a High Reach Demolition boom to digging boom. (2)


1


2

360° ALL-AROUND VIEW CAMERA (AVM) SYSTEM

The 360° all-around view camera (AVM) system and standard from DX380DM-7 up gives you full view of the machine's surroundings.







COMFORT

One of the most spacious cabs in the market, with low noise & vibration levels and excellent all-round visibility. Fully adjustable heated air suspension seat, air conditioning with climate control.

ADVANCED FILTRATION

Highest efficiency filters & cleaners remove water, dust & particles to protect your investment optimally.

HYDRAULICALLY ADJUSTABLE TRACK

Undercarriage fully retracted is :

- 2540 mm for DX245DM-7
- 2970 mm for DX380DM-7/DX530DM-7

CONTROLLABILITY

Exclusive jog shuttle button, 4 work & 4 power modes, proportional control, user-friendly Develon Smart Touch screen 8" which integrates all functions and settings of your machine in one place.

ADDITIONAL COUNTERWEIGHT

A boom extension and additional counterweight kit are available upon request.

VARIOUS SELECTABLE DEMOLITION ATTACHMENTS



Fixed Pulverizer | **Rotating Crusher** | **Multi-Processor** | **Multi-Grapple** | **Quick Coupler**



WITH YOUR SAFETY IN MIND

Develon demolition excavators are powerful designed for power for 2 main reasons: the power to tear down the toughest structures, and the stability power to keep the operator completely safe.

*** Please note that cabin pictures in the brochure may vary due to engineering changes across different serial numbers.**

KEEPING DEMOLITION WORKS SAFE

TILTING CAB

Thanks to the tilting cab, the operator can maintain a comfortable posture and experience less fatigue during demolition work. Safety valves are located in the cab and behind it. In case of an emergency, the cab can be lowered by the operator or from outside the cab.

YOUR SAFETY IS OUR PRIORITY

- FOGS: Protects the operator from falling or flying objects
- Rear and side view camera
- All round view monitor 360° for maximum safety in narrow environments.
- Boom piping protections against debris falling are standard.

HYDRAULICALLY ADJUSTABLE TRACK (EXTENDED TRACK)

- Unique heavy duty undercarriage for DX245DM-7 with 30 t components stays within 2.5 m width for transportation.
- Best stress distribution and durability thanks to the circular shape and self lubricated system.
- Widest undercarriage in the industry and squared base for best working diagram at 360°.

STABILITY WARNING SYSTEM

Thanks to 4 angle sensors and 1 pressure sensor calculates in real time the machine relative position with its tipping limit weight, even if working tool is changed and warns the operator safety by monitoring the exact position of the machine and the work tool. The system warns the operator when the safety limit is being approached; and the system stops the machine's operation when the limit is reached. Thanks to safety key behind the seat operator can disactivate the hydraulic block.







* Please note that cabin pictures in the brochure may vary due to engineering changes across different serial numbers.

OPERATING IN COMFORT

THE IDEAL WORKSPACE – DESIGNED AROUND YOU

The DX245DM-7, DX380DM-7 and DX530DM-7 models are designed to provide you with the best possible working conditions. The pressurised cab is ISO-certified for your safety. Its spacious interior offers a fully adjustable, heated air suspension seat. Comfortably seated, you have easy access to several storage compartments and a clear all-round view of the worksite. Compared to previous generations noise and vibration levels have been reduced, while air conditioning and automatic climate control allow you to keep working for hours on end without feeling tired.

BEST-IN-CLASS OPERATOR ENVIRONMENT

Develon Crawler Excavators are powered by industry-leading engines that save on fuel and meet the latest Stage V European regulations in addition to all noise regulations.
The low levels of cab vibration and noise provide exceptional operator comfort – and the cab air is filtered to ensure a healthy work environment.

AUXILIARY LINES

1/2 ways lines, rotation line and drainage line are all standard for maximum comfort when operating attachments. Operator can easily set his preference in the control panel to operate with the rollers on joystick or with the pedal.

HEATED AIR SUSPENSION SEAT (STANDARD)

In addition to being adjustable and providing lumbar support, the seat has an air suspension system to reduce vibrations and a heating system. It also features a cooling seat system available. A storage box has been placed under the seat for extra convenience.

AIR CONDITIONING WITH CLIMATE CONTROL

The operator can choose from 5 different modes to regulate the airflow, while the system adjusts the air temperature & fan speed to maintain the operator's selected temperature. A recirculated air function is also available.

DEVELON SMART TOUCH SCREEN

Extremely easy to read and use, the 8" touch screen integrates all functions and settings of your machine, including hands-free phone system.

STORAGE SPACE

The new cab contains 7 storage compartments including one hot/cool box (linked to the HVAC system).

CABSUS MOUNT

The cab's new suspension system (CabSus mount) dampens high vibrations and provides outstanding protection against impact. The system absorbs shocks and vibrations much more effectively than a conventional viscous suspension system.



*** Please note that cabin pictures in the brochure may vary due to engineering changes across different serial numbers.**



DX530DM-7

For the most extreme and demanding demolition job site, Develon offers the DX530DM-7 31 m reach version for DX530DM-7, which includes 544 mm longer tracks (in total almost 6 meters long), 3 lifting boom cylinders, additional 3 t counterweight and a base boom 3.5 m extension. With a weight over 70 t in demolition configuration. This machine has a 31 m maximum pin height with a 3 t max work tool or a 27.5 m pin height with a 3.5 t work tool.

DEVELON DM MACHINES ARE DESIGNED FOR LONG-TERM, ALL-ROUND, HEAVY-DUTY PERFORMANCE

EXTRA-STRONG X CHASSIS

Designed using finite element analysis and 3D computer simulation, the X-shaped undercarriage ensures optimum structural integrity and durability.

UNDERCARRIAGE DURABILITY

- The chain is composed of sealed, self-lubricating links for long-term dependability. For improved protection, alignment and performance, there are 3 types of guard available: normal, double and full-length, according to the application.
- The track spring and idler are joined for long-lasting performance and easy maintenance.
- Cast steel heavy-duty sprockets guarantee the highest resistance.
- The track rollers are lubricated for life.

STRENGTHENED BOOM AND ARM

During the development of our machines, we use intensive testing to calculate the best load distribution throughout the boom structure.
Combined with thicker material, this means that element fatigue is limited and both reliability and component life are increased. To better protect the base of the arm, reinforced bars have been added and the arm center and end boss have been strengthened.

ADVANCED FILTRATION

- Fuel filters and water separator: a filter-type high-performance water separator effectively captures moisture in the fuel, reducing impurities and helping minimize any fuel-related issues. Pre-filters and dual main filters as standard achieve a high degree of purity that minimizes fuel system failures.
- Cyclonic air pre cleaner: air filter life and engine efficiency are directly related to the amount of debris ingested through the engine's air intake. Therefore, a cyclonic air pre-cleaner is the first stage of an air intake system that prevents the majority of heavier-than-air particles from entering. Self-cleaning and maintenance-free, the system is able to expel all types of mixed debris, including dust, snow, rain, leaves, sawdust, straw, etc.

ADVANCED PIN AND BUSHING TECHNOLOGY

Highly lubricated metal is used for the boom pivot to increase the component's lifetime and lengthen greasing intervals. The bucket pivot features EM (Enhanced Macrosurface) bushings. These have a tailored surface pattern and self-lubricating coating for optizmized greasing interval (every 250 hours, 50 hours for bucket pins) and more efficient debris removal. Ultra-hard wear-resistant discs and bucket pivot polymer shims increase durability even more.









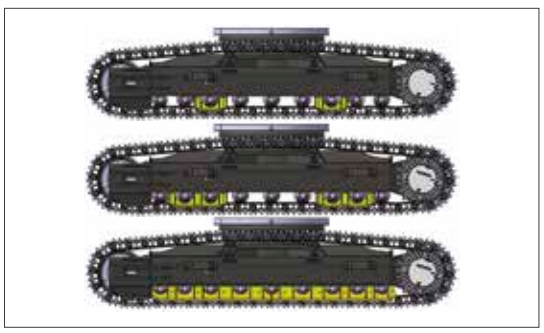

Track guards: to provide better protection, track alignment, and performance of machine while travelling. Double guards per track as standard for DX245DM-7 and DX380DM-7 and
Triple guards for DX530DM-7 (full length track guard available). These various track guards provide you with optimal solutions for your extreme applications.

TECHNICAL SPECIFICATIONS DX245DM-7 & DX380DM-7 & DX530DM-7

ENGINE

Designed to deliver superior performance and fuel efficiency, the Develon (DX245DM-7) and Scania (DX380DM-7 & DX530DM-7) Stage V diesel engines fully meet the latest emissions regulations. To optimize machine performance, the engines use high-pressure fuel injectors, air-to-air inter-cooler and electronic engine controls. 4-Cycle Water-Cooled, Wastegate Turbocharged (DX245DM-7) / Variable Geometry Turbocharged (DX380DM-7 & DX530DM-7), Diesel Oxidation Catalyst (DOC), Selective Catalytic Reduction (SCR) and Diesel Particulate Filter (DPF).

	DX245DM-7	DX380DM-7	DX530DM-7
Model	Develon DL06P	Scania DC09	Scania DC13
No. of cylinders	6	5	6
Max. power (SAE J1995)	129 kW/173 hp at 1800 rpm	240 kW/327 hp at 1800 rpm	294 kW/394 hp at 1800 rpm
Net. power (SAE J1349)	121 kW/162 hp at 1800 rpm	236 kW/321 hp at 1800 rpm	289 kW/387.6 hp at 1800 rpm
Max. torque (SAE J1995)	755 Nm at 1400 rpm	1348 Nm at 1200 rpm	1861 Nm at 1300 rpm
Idle (low - high)	800 [±10] - 1900 [±25] rpm	800 [±20] - 1900 [±25] rpm	750 [±20] - 1900 [±25] rpm
Displacement	5.89 l	9.3 l	12.7 l
Bore × stroke	100 × 125 mm	130 × 140 mm	130 × 160 mm
Starter	24 V - 6 kW		
Batteries - Alternator	2 × 12 V, 100 Ah - 24 V, 100 A		
Air filter	Double element air cleaner and pre-filtered Cup dust separator	Double element air cleaner and pre-filtered Cyclone Turbo dust separator	

SWING MECHANISM

The swing mechanism uses an axial piston motor, driving a 2-stage planetary reduction gear bathed in oil for maximum torque.

- Swing bearing: single-row, shear type ball bearing with induction hardened internal gear
- Internal gear and pinion immersed in lubricant

	DX245DM-7	DX380DM-7	DX530DM-7
Max. swing speed	11.4 rpm	9.90 rpm	9.2 rpm
Max. swing torque	9334 kgf·m	14830 kgf·m	20130 kgf·m

HYDRAULIC SYSTEM

The e-EPOS (Electronic Power Optimising System) is the brain of the excavator – minimising fuel consumption and optimizing the efficiency of the hydraulic system for all working conditions.
To harmonise the operation of the engine and the hydraulics, the e-EPOS is connected to the engine's electronic control unit (ECU) via a data transfer link.

- The hydraulic system enables independent or combined operations
- 2 travel speeds offer either increased torque or high speed
- Cross-sensing pump system for fuel savings
- Auto-deceleration system
- 4 operating modes, 4 power modes
- Flow and pressure control of auxiliary hydraulic circuits from control panel
- Computer-aided pump flow control

	DX245DM-7	DX380DM-7	DX530DM-7
Main pumps, type	2 × variable displacement tandem axial piston pumps		
Maximum flow at 1800 rpm	2 × 210 l/min	2 × 350 l/min	2 × 390 l/min
Pilot pump, type	Gear pump		
Maximum flow at 1800 rpm	27 l/min	24.12 l/min	24.12 l/min
Relief valve settings:			
Implement	350/370 kg/cm²	380 kg/cm²	370 kg/cm²
Travel	370 kg/cm²	343 kg/cm²	350 kg/cm²
Swing	300 kg/cm²	294 kg/cm²	300 kg/cm²
Pilot	40 kg/cm²	40 kg/cm²	40.8 kg/cm²

CAB

The air-conditioning and heating systems are integrated for optimal climate control. An automatically-controlled fan supplies the pressurised and filtered cab air, which is distributed throughout the cab from multiple vents.
The heated air suspension, adjustable operator's seat includes a seat belt. The operator can adjust the ergonomic seat and joystick console separately according to his preferences.

DRIVE

Each track is driven by an independent, high-torque axial piston motor through a planetary reduction gearbox. Two levers / foot pedals guarantee smooth travel with counter-rotation on demand. The track frame protects the travel motor, brake and planetary gears. The multi-disc track brakes are spring-applied and hydraulic released.

	DX245DM-7	DX380DM-7	DX530DM-7
Travel speed (low - high)	3.0 - 5.3 km/h	3.0 - 5.4 km/h	3.2 - 5.6 km/h
Max. traction	31.1 t	43.4 t	45.7 t
Max. gradeability	35° / 70%		

UNDERCARRIAGE

Extremely robust construction throughout – made of high-quality, durable materials, with all welded structures designed to limit stresses.

- Track rollers lubricated for life
- Idlers and sprockets fitted with floating seals
- Track shoes made of induction-hardened alloy with triple grouser
- Heat-treated connecting pins
- Hydraulic track adjuster with shock-absorbing tension mechanism

	DX245DM-7	DX380DM-7	DX530DM-7
Upper rollers (standard shoe)	2	2	3
Lower rollers	7	9	9
Number of links & shoes per side	44	50	53
Link pitch	216 mm		215.9 mm

FLUID CAPACITIES

	DX245DM-7	DX380DM-7	DX530DM-7
Fuel tank	339 l	600 l	685 l
Cooling system (radiator)	30.7 l	49.5 l	90 l
Urea (def) tank	31.5 l	70 l	70 l
Hydraulic oil tank	200 l	380 l	390 l
Engine oil	27 l	36 l	45 l
Swing drive	5 l	8 l	2 × 5 l
Travel device	2 × 4 l	2 × 7 l	2 × 10 l

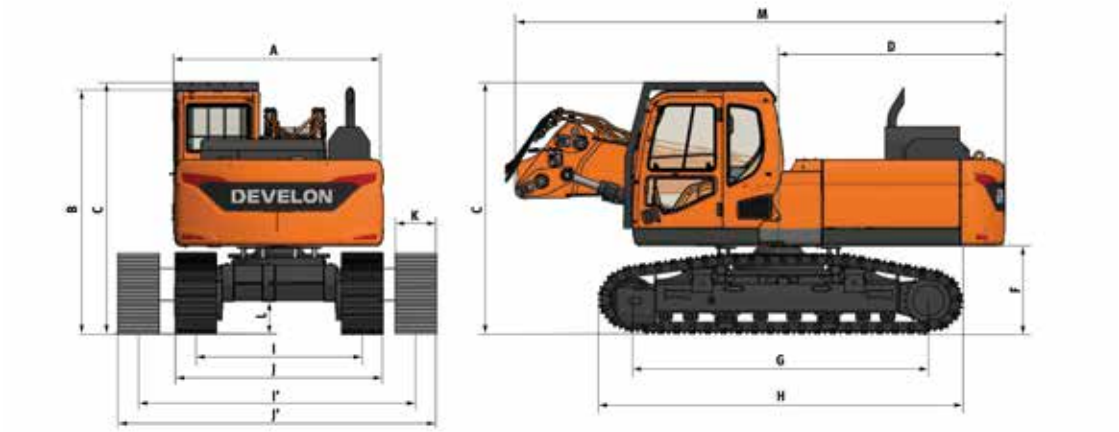

DIMENSIONS & WEIGHT – BASE MACHINE

		Unit	DX245DM-7	DX380DM-7	DX530DM-7
A	Width superstructure	mm	2545	2990	2990
B	Overall height	mm	2190	3210	3350
C	Overall height (incl. FOGS)	mm	3150	3400	3550
D	Tail swing radius	mm	2815	3530	3800
F	Minimum counterweight clearance*	mm	1180	1280	1450
G	Tumbler length	mm	3650	4250	4922
H	Track length	mm	4456	5200	5999
I	Track gauge (retracted)	mm	1990	2370	2370
I'	Track gauge (extended)	mm	3190	3770	3770
J	Track width (retracted)	mm	2540	2970	2970
J'	Track width (extended)	mm	3740	4370	4370
K	Shoe width	mm	500	600	600
L	Minimum ground clearance*	mm	490	600	525
M	Overall length (without arm)	mm	5960	7000	8200
	Base machine weight	kg	26100	40500	43000 +11000 CWT

*** with shoe grouser**

DEMOLITION CONFIGURATION (HRD)

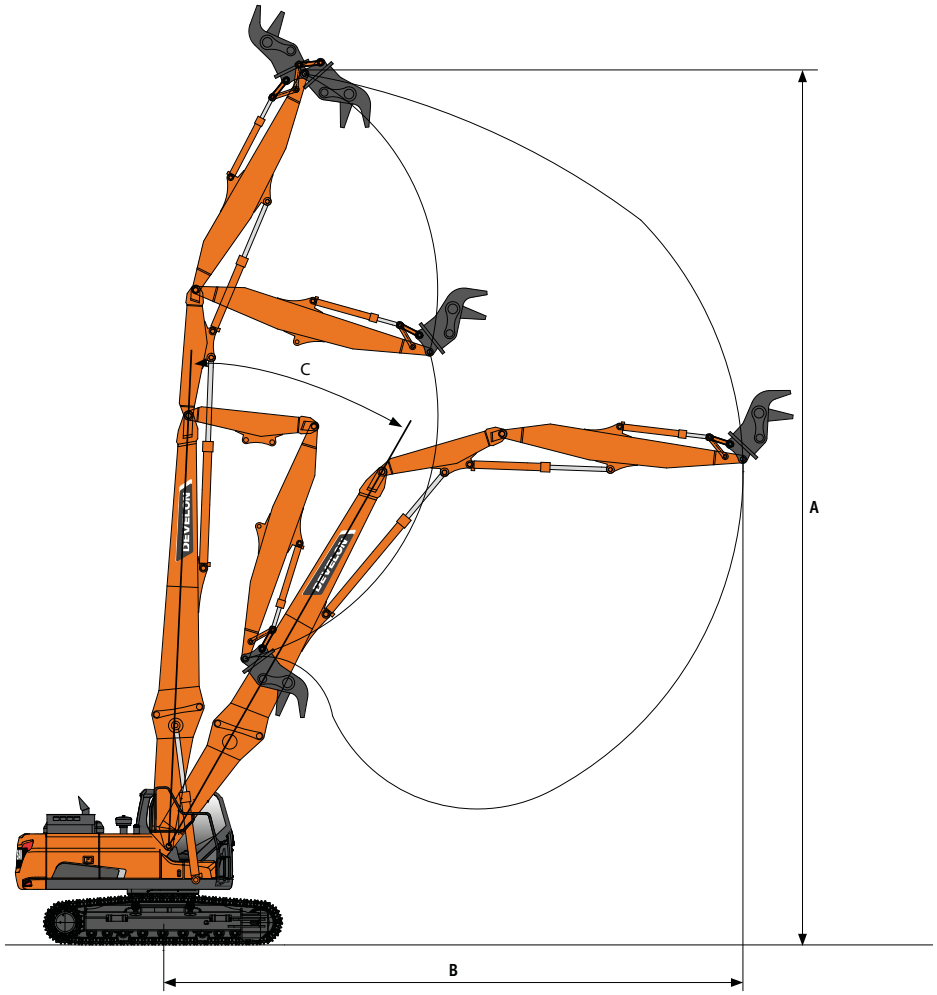

DEMOLITION CONFIGURATION

	Unit	DX245DM-7	DX380DM-7	DX530DM-7
Max tool weight	kg	2000	3000	3000
Variable undercarriage width	mm	2540 - 3740	2970 - 4370	2970 - 4370

WORKING RANGE

	Unit	DX245DM-7	DX380DM-7	DX530DM-7
A Maximum height at pin	mm	18031	23030	31088
B Maximum reach at pin*	mm	11810	14140	17980
C Maximum height (2:1 line)	mm	16400	19000	26805

*** the maximum reach values refer to 360°**

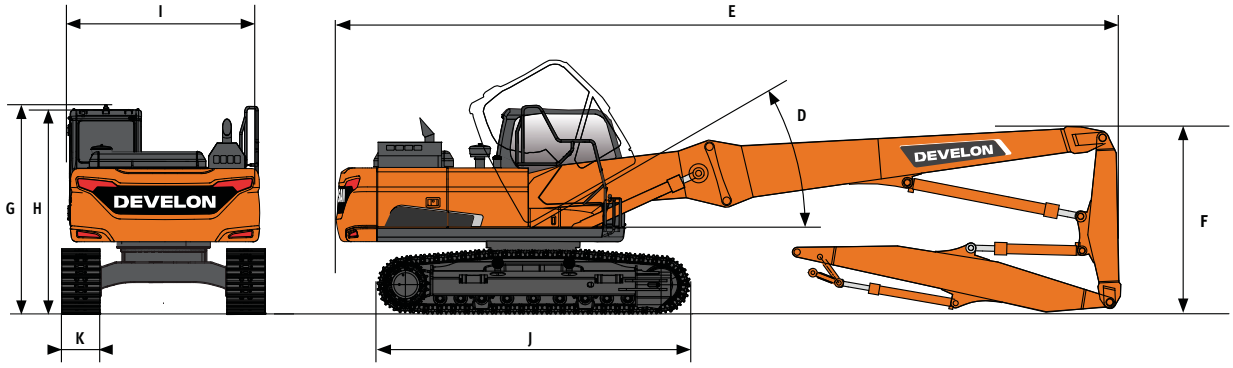

TRANSPORT DIMENSIONS & WEIGHTS

		Unit	DX245DM-7	DX380DM-7	DX530DM-7
D	Cab tilting angle	°	30	30	30
E	Overall length (incl. High Reach Demolition boom)	mm	11460	15200	22300
F	Overall height (incl. High Reach Demolition boom)	mm	3070	3100	3100
G	Maximum height with protection grid (FOGS)	mm	3150	3150	3360
H	Cab height	mm	2960	3150	3275
I	Transport width	mm	2540	2970	2990
J	Track length	mm	4456	5200	5999
K	Shoe width	mm	550	600	600
	Weight of boom extension	kg	–	2000 (opt)	4000
	Additional counterweight	kg	–	2000 (opt)	3000
	Weight	kg	30700	47500	70500

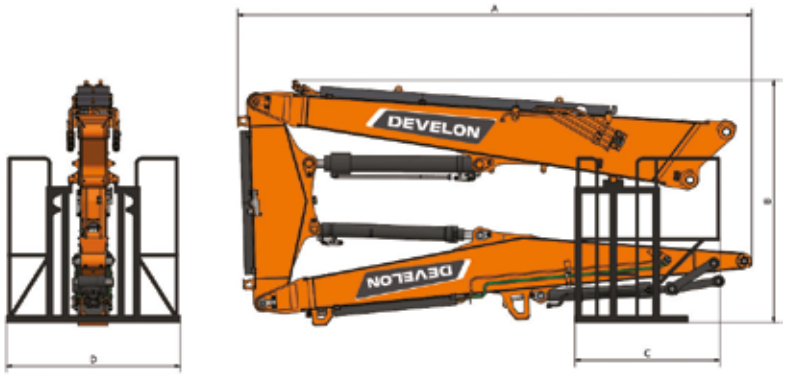

DIMENSIONS & WEIGHT – HRD (HIGH REACH DEMOLITION)

		Unit	DX245DM-7	DX380DM-7	DX530DM-7
A	Overall length	mm	6390	9000	12500
B	Overall height	mm	3050	3080	3100
C	Length of storage rack	mm	1800	2600	1800
D	Width of storage rack	mm	2160	2200	2160
	Weight of storage rack	kg	100	100	200
	Weight of HRD boom with storage rack	kg	4700	7100	9700

DIGGING CONFIGURATION

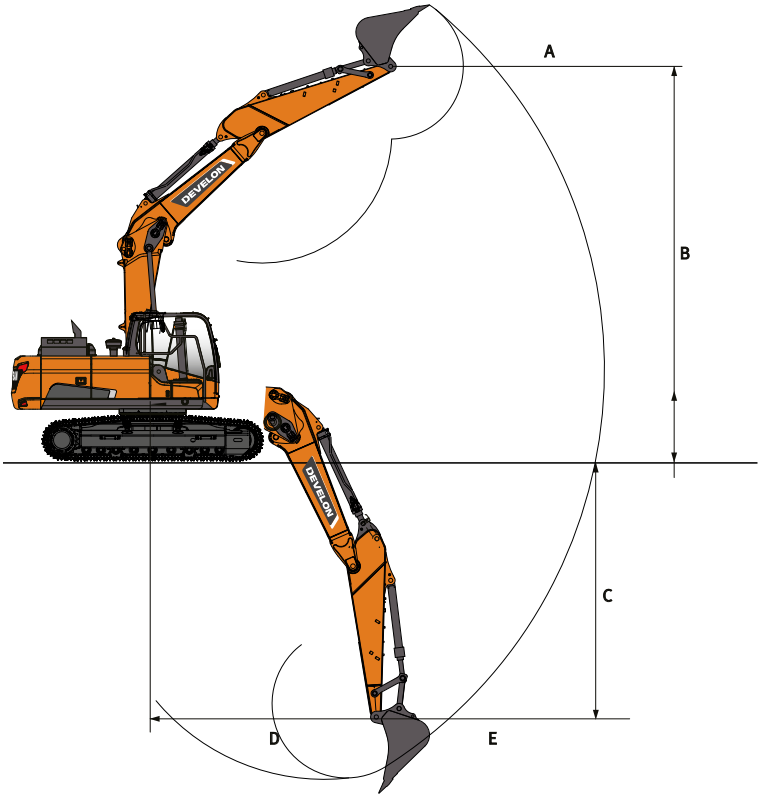

DIGGING CONFIGURATION

	Unit	DX245DM-7	DX380DM-7	DX530DM-7
Arm length	mm	2400	3200	3350
Maximum bucket capacity	m^3	1.0	2.32	2.86

*** additional counterweight included**

WORKING RANGE (AT PIN)

	Unit	DX245DM-7		DX380DM-7		DX530DM-7	
		Straight	Bent	Straight	Bent	Straight	Bent
A Max. digging height	mm	9800	7910	10120	9155	14650	11960
C Max. digging depth	mm	4070	4880	4320	5500	5310	6330
D Max. digging reach at ground level	mm	8500	7865	9920	9145	13330	12040
E Max. digging reach	mm	8690	8560	10110	9400	13560	12045

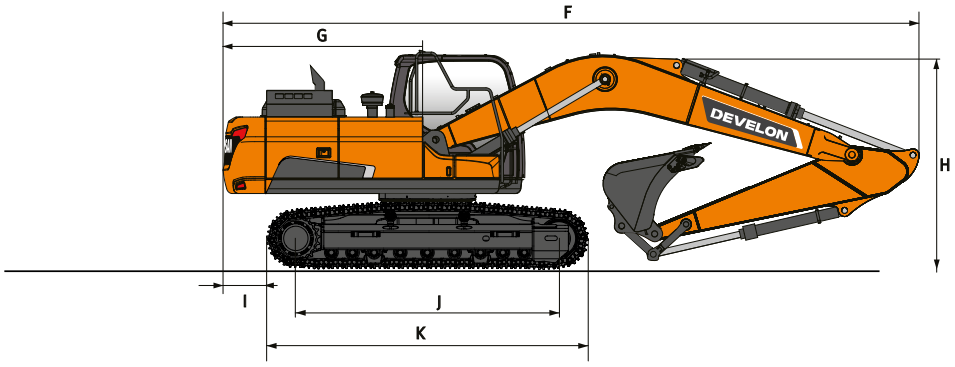

* This illustration is simplified to showcase the dimensions

TRANSPORT DIMENSIONS & WEIGHTS

		Unit	DX245DM-7	DX380DM-7	DX530DM-7
F	Overall length	mm	9590	11285	12230
G	Tail swing radius	mm	2815	3530	3800
H	Boom height	mm	3110	3415	3705
J	Tumbler center distance	mm	3610	4250	4922
K	Undercarriage length	mm	4456	5200	5999
	Weight	kg	28800	44900	59800/66800 *

* with 4 t base boom extension and 3 t additional CTW

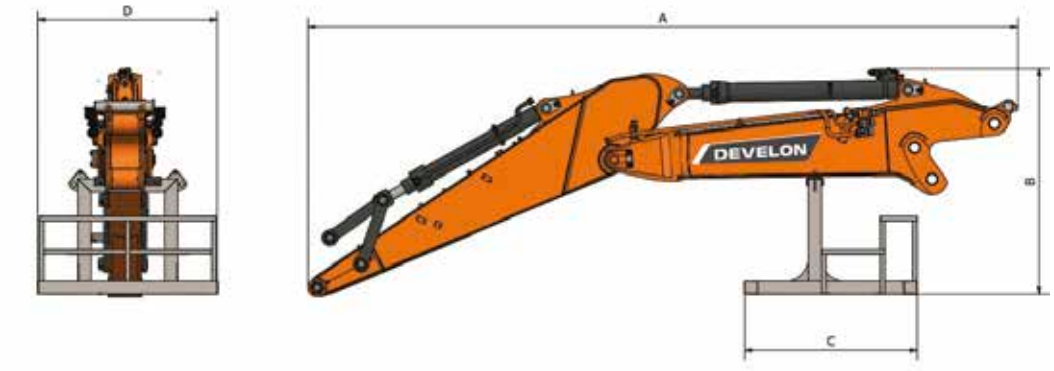

TRANSPORT DIMENSIONS & WEIGHT – WORK EQUIPMENT

		Unit	DX245DM-7	DX380DM-7	DX530DM-7
A	Overall length	mm	6390	7200	7500
B	Overall height	mm	2030	2600	2850
C	Length of storage rack	mm	1560	1560	1560
D	Width of storage rack	mm	1620	1620	1620
	Weight of digging boom with storage rack	kg	2800	4500	6000

STANDARD AND OPTIONAL EQUIPMENT

● Standard ○ Optional

Engine

- ● Auto-idle function
- ● Auto shut-off

Hydraulic system

- ● Boom and arm flow regeneration
- ● Swing anti-rebound valves
- ● Fine swing mode, on or off from cab
- ● Spare ports (valve)
- ● One-touch power boost function
- ● Smart Power Control (SPC)
- ● One & two way auxiliary hydraulic line for opening & closing of tool (with pedal & joystick control)
- ● Cylinder cushioning & contamination seals
- ● Control of auxiliary hydraulic flow and pressure from the display panel

Cab & Interior

- ● Pressurised, sound-insulated and CabSus mounted cab
- ● Heated, adjustable air suspension seat with adjustable headrest and armrest
- ● Air conditioning with climate control
- ● Pull-up type front window with sun roller blind and removable lower front window
- ● Sliding left window
- ● Intermittent upper and lower windshield wiper
- ● Rain visor
- ● Rear window defroster switch
- ● Adjustable PPC wrist control levers for arm, boom, bucket and swing
- ● Joysticks and pedal provide proportional control of auxiliary lines for attachments
- ● Travel pedals and hand levers
- ● Jog shuttle switch
- ● Develon Smart Touch – 8" touch screen, all-in-one
- ● Attachment management system
- ● Engine speed (RPM) control dial
- ● Automatic travel speed (slow / fast)
- ● 4 operating modes & 4 working modes
- ● Cup holder
- ● Multiple storage compartments (e.g. document holder under seat)
- ● Storage area (tools, etc.)
- ● Heating and cooling lunch box
- ● Flat, spacious, easy-to-clean floor
- ● Keyless start (Develon Smart Key) & remote door lock/unlock
- ● Anti-theft protection (from control panel)
- ● 12 V spare power socket
- ● Serial communication port for laptop PC interface
- ● Remote radio ON/OFF switch
- ● Radio with Bluetooth streaming and handsfree call system
- ● Tilting cabin
- ● 360° all-around view camera (AVM) for DX380DM-7 and DX530DM-7

Safety

- ● FOPS cab – top and front cab guards (ISO 10262)
- ● Stability safety system with graphical display, warning buzzer and movements limitation
- ● Boom and arm cylinder safety valves
- ● Overload warning device
- ● Quick hitch for base boom pin to front attachment
- ● Piping protection for High Reach Demolition booms and arm
- ● Large hand rails on upper structure and steps
- ● Rotating beacon
- ● Rear and side view camera
- ● Punched metal anti-slip plates
- ● Hydraulic safety lock lever
- ● Safety glass
- ● Glass Hammer for emergency escape
- ● Right and left rear-view mirrors
- ● Lockable fuel cap and covers
- ● Battery cut-off switch
- ● Engine restart prevention system
- ● Parking brake
- ● LED 10 work lights (2 boom, 4 cabin roof, 2 lower frame, 2 upper frame), for other models one additional upper frame LED light
- ● Emergency engine stop switch and hydraulic pump control switch
- ● Falling FOGS and OPG – top and front cab guards (ISO 10262 level II and SAE J1356" for DX245 and DX380DM-7)
- ● Nickel treated undercarriage extension hydraulic cylinders
- ○ Tiltable falling FOPS and OPG – top and front cab guards (ISO 10262 level II and SAE J1356) (standard for DX530DM-7, optional for DX245DM-7 and DX380DM-7)
- ○ Protection guards for demolition arm cylinder
- ○ Protection guards for digging arm cylinder
- ○ Bullet proof front and upper window + specific curved upper wiper
- ○ Protection for nickel treated undercarriage extension

Undercarriage

- ● DX245DM-7: Hydraulically adjustable undercarriage: 2.54 m to 3.74 m
- ● DX530DM-7 & DX380DM-7: Hydraulically adjustable undercarriage: 2.97 m to 4.37 m
- ● Greased and sealed track links
- ● DX245DM-7: 550 mm HD 12 mm triple grouser shoes
- ● DX530DM-7 & DX380DM-7: 600 mm triple grouser shoes
- ○ Track scraper
- ○ Track locking kit to lock undercarriage extension at desired width (20 – 40 – 60 cm)

● Standard ○ Optional

Other

- ● DX245DM-7: 18 m High Reach Demolition front
- ● DX245DM-7: Digging front: 5700 mm boom, 2400 mm arm
- ● DX380DM-7: 23 m High Reach Demolition front
- ● DX380DM-7: Digging front: 6500 mm boom, 3200 mm arm
- ● DX530DM-7: Digging front: 7100 mm boom, 3350 mm arm
- ● DEVELON Fleet Management (telematic system)
- ● Auto shut-off fuel filler pump
- ● Fuel pre-filter with water separator sensor
- ● Dust screen for radiator/oil cooler
- ● Self-diagnostic function
- ● Base boom extension 3.5 m for DX530DM-7 (quick coupling pin) (31m pin height)
- ● Hydrostatic 2-speed travel system with automatic shift
- ● Remote greasing for swing circle and work group pivot points
- ● Hydraulic piping for crusher, quick-coupler, clamshell, tilting and rotating buckets
- ● Double pump flow
- ○ 2 t counterweight for DX380DM-7
- ○ 1 t counterweight for DX245DM-7
- ○ DX530DM-7: 27.5 m High Reach Demolition front
- ○ DX530DM-7: 31 m High Reach Demolition front
- ○ Air compressor 24 V, 15 l
- ○ Water spray system, 3 nozzles, 30 l
- ○ Base boom extension 2 m, digging/demolition arms and transportation cage + 2t additional counterweight for DX380DM-7 (manual pins or quick coupling on request)
- ○ Auto greasing system
- ○ Bucket Cylinder Guard
- ○ Color customization (One color)
- ○ Camera Kit on HRD boom
- ○ Bullet Proof Glasses
- ○ Reversible Fan Pneumatic System
- ○ Led ligths on Demolition Boom
- ○ Pressurized Air Cab Filter

*** Please note that this products are special application machines, please contact and discuss with Develon relevant staff before purchase.**

DEVELON
FLEET MANAGEMENT



EQUIPMENT INFORMATION

Considering purchasing equipment? View the brochures that you are interested in, compare the specifications of theequipment, and request a quotation from your local dealer.

ONLINE PARTS SHOP

Helps you purchase quality-proven genuine parts quickly. You can order quickly and easily the parts you need by searching for the right parts for your equipment.

MY MACHINE

You can check all equipment data and maintenance costs easily and conveniently via the easy-to-use Dashboard.

CUSTOMIZED SERVICE

Receive push notification alerts when equipment requires attention and manage your machine effectively with a checklist according to the product life cycle. You can request service directly and check the progress.

SOCIAL MEDIA WALL

Enjoy the moment with Develon Construction equipment!

Powered by **Innovation**

DISCOVER MORE:
DX245DM-7

DX380DM-7K

DX530DM-7K

DEVELON

HD Hyundai Infracore Europe s.r.o.
IBC - Pobřežní 620/3, 186 00 Praha 8-Karlín
Czech Republic

©2023 DEVELON D4600901-EN (05-23)

Certain specification(s) are based on engineering calculations and are not actual measurements. Specification(s) are provided for comparison purposes only and are subject to change without notice.
Specification(s) for your individual Develon equipment will vary based on normal variations in design, manufacturing, operating conditions, and other factors. Pictures of Develon units may show other than standard equipment.