DEVELON

Crawler Excavators

DX300LC-7K



Maximum power	271 hp
Operating weight	31.5 t
Bucket capacity	1.75 m^3

DEVELON DX300LC-7K CRAWLER EXCAVATOR:

MEET THE NEW GENERATION OF DEVELON MACHINES



Lift your business to the next level with the DX300LC-7K Develon excavator.

Exceptionally powerful, yet environmentally friendly, the DX300LC-7K excavator features extraordinary fuel efficiency.



D·ECO POWER

Real breakthrough technology that sets new standards in the industry: The exclusive ECO Power system improves productivity and saves fuel. A pressure-controlled pump, closed-center main control valve, and 9 sensors electronically detect and control the precise amount of hydraulic oil required to perform a task. The exact amount of oil required is metered instead of continuously forcing a fixed amount of oil through the system. The hydraulic system output requirements are optimized with engine horsepower. The resulting efficiency educes fuel consumption improves productivity substantially. Improved feedback through the controls results in an outstanding level of operator comfort and much smoother machine management.

RAISE PROFITS, PRODUCTIVITY & FUEL EFFICIENCY

HIGH PRODUCTIVITY AND LOW COST OF OWNERSHIP

Delivers higher productivity and reduced fuel consumption in an efficient and comfortable work environment.

RELIABILITY

Reinforced castings and forged steel pivot points and reinforced heavy-duty arm and boom to withstand high-impact materials. Monoboom or articulated boom for added versatility. Improved hydraulic line routing to protect your investment.

YOUR SAFETY IS OUR PRIORITY

360° camera system, large side mirrors, powerful LED work lights, anti-slip steps and platforms, guard rails on upper structure, and ultrasonic detection as option.

PRODUCTIVITY

State-of-the-art bucket and arm digging forces.

UNDERCARRIAGE DURABILITY

Forged steel and deep-hardened top rollers – oil-lubricated rollers – heat-treated sprocket – deep-hardened, heat-treated, grease lubricated & longer life track chains.



COMFORT

One of the most spacious cabs in the market, with low noise & vibration levels and excellent all-round visibility. Fully adjustable heated air suspension seat, air conditioning with climate control as standard.

OPERATE AT EASE

All important information is at your fingertips with the new easy-to-use 8" touch screen.

ENGINE

Exceptionally powerful – with high torque at low revs – the new Develon engine combines reliability and low environmental impact. This Stage V compliant 6 cylinder engine delivers 202 kW at 1800 rpm.



EXCELLENT FUEL EFFICIENCY

In combination with the D-EcoPower system, the Smart Power Control (SPC) system provides increased fuel efficiency by 11% compared to the previous generation. The system delivers the exact amount of oil needed to avoid any loss of energy.

EASY MAINTENANCE

Easy access to all compartments. Radiator and oil cooler separated for better cooling and easier access. Maintenance data directly available from control panel.

ADVANCED FILTRATION

Highest efficiency filters & cleaners remove water, dust & particles to protect your investment optimally.



Super-long reach and two-piece boom: one long-reach machine – with a reach of 17.5 m – is ideally suited for special applications. A two-piece boom machine configuration is also available for more versatility.


STAGE V
COMPLIANT
DEVELON



TOP PERFORMANCE AND FUEL EFFICIENCY

THE POWER TO RAISE PRODUCTIVITY

- The DX300LC-7K is equipped with the latest generation Develon engine
- Stage V compliant, this engine boasts extremely low emissions because reducing our environmental impact is paramount to us
- Exhaust gases are purified by Selective Catalytic Reduction (SCR) technology, a Diesel Oxidation Catalyst (DOC) and a Diesel Particulate Filter (DPF)

EFFICIENT FUEL MANAGEMENT

- Choice of 4 power modes (Eco - Standard - Power - Power Plus) and automatic Smart Power Control system for optimal power and reduced fuel consumption in all conditions
- Smart Power Control (SPC) system: reduces engine speed and adjusts pump torque according to work conditions. The system automatically adjusts engine power and hydraulic output to improve fuel efficiency and reduce emissions
- Engine auto-shut-off: shuts down the engine after the machine has been idling for a specified time. The operator can set the delay before shut-off via the touchscreen

VARIABLE GEOMETRY TURBOCHARGER

Provides optimal air flow to the engine combustion chamber under all speed and load conditions, so that exhaust gas is cleaner and fuel economy is improved.

SPC (SMART POWER CONTROL)

2 systems (Variable Speed Control and Pump Torque Control) work together to improve efficiency while maintaining productivity.

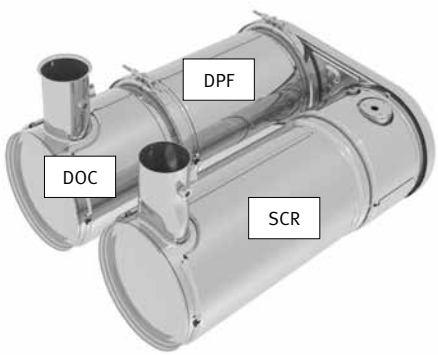



RELIABILITY – THE HABIT OF A LIFETIME

In your profession, you need equipment you can depend on. At Develon, we put durability and reliability at the core of our machines' development. Our materials and structures undergo stringent testing for strength and resilience under the most extreme conditions.

DESIGNED FOR LONG TERM, ALL-ROUND, HEAVY-DUTY PERFORMANCE

EXTRA-STRONG X CHASSIS

Designed using finite element analysis and 3D computer simulation, the X shaped undercarriage ensures optimum structural integrity and durability.

UNDERCARRIAGE DURABILITY

- The chain is composed of sealed, self-lubricating links for long-term dependability. For improved protection, alignment and performance, there are 3 types of guard available: normal, double, and full-length, according to the application
- The track spring and idler are joined for long-lasting performance and easy maintenance
- Cast steel heavy-duty sprockets guarantee the highest resistance
- The track rollers are lubricated for life

STRENGTHENED BOOM AND ARM

During the development of our machines, we use intensive testing to calculate the best load distribution throughout the boom structure.
Combined with thicker material, this means that element fatigue is limited and both reliability and component life are increased.
To better protect the base of the arm, reinforced bars have been added and the arm center and end boss have been strengthened.

ADVANCED FILTRATION

- Fuel filters and water separator: a filter-type high-performance water separator effectively captures moisture in the fuel, reducing impurities and helping minimize any fuel-related issues. Pre-filters and dual main filters as standard achieve a high degree of purity that minimises fuel system failures.
- Cyclonic air pre-cleaner: air filter life and engine efficiency are directly related to the amount of debris ingested through the engine's air intake. Therefore, a cyclonic air pre-cleaner (as standard) is the first stage of an air intake system that prevents the majority of heavier-than-air particles from entering. Self-cleaning and maintenance-free, the system is able to expel all types of mixed debris, including mud, snow, rain, leaves, sawdust, chaff, etc.

PIN AND BUSHING ADVANCED TECHNOLOGY

Highly lubricated metal is used for the boom pivot to increase the component's lifetime and lengthen greasing intervals. The bucket pivot features EM (Enhanced Macrosurface) bushings. These have a tailored surface pattern and self-lubricating coating for optimised greasing and more efficient debris removal. Ultra-hard wear-resistant discs and bucket pivot polymer shims increase durability even more.











Track guards: to provide better protection, track alignment, and performance of machine while travelling. 2 guards per track as standard (double and full-length track guards available as options). These various track guard options provide you with optimal solutions for your extreme applications.


1
2
3
4
5
6
7



1. Large sun roof
2. Sun visor
3. Window grip
4. Storage compartment for sunglasses
5. Joysticks and switches are integrated in adjustable control consoles
6. Improved visibility on the bottom right
7. Separate seat height adjustment lever and cushion tilting function
8. Straight ergonomic pedals
9. Flat, spacious, easy-to-clean floor

OPERATING IN HIGH COMFORT

BEST-IN-CLASS OPERATOR ENVIRONMENT

The DX300LC-7K is designed to provide you with the best possible working conditions. The sophisticated state-of-the-art ROPS cab is pressurized and ISO-certified for your safety. A high-quality heated seat with air suspension provides maximum operator comfort.

FIRST CLASS COMFORT

Comfortably seated, you benefit from a clear all-round view of the worksite and have easy access to several storage compartments. Noise and vibration levels are remarkably low, while air conditioning and automatic climate control allow you to keep working for hours on end without feeling tired.
Pedals, joysticks and armrests have all been designed for operator comfort and efficiency.

CAB SUSPENSION

The cab's suspension system (CabSus mount) dampens vibrations and provides outstanding protection against impact. This system absorbs shocks and vibrations much more effectively than a conventional silentblock suspension system.

KING SIZE TOUCHSCREEN

The wide 8" touchscreen provides easy scrolling through the different menus, including power settings and auxiliary hydraulics settings. It also allows you to connect a Bluetooth device or listen to your favorite radio station.

360° CAMERA SYSTEM

The 360° camera system gives you full view of the machine's surroundings.





1. Proportional switch
2. Display monitor
3. Breaker/Booster button
4. Joystick 1-touch function button
5. Starter switch (Start/Stop button)
6. Engine speed control dial
7. Travel speed selector switch
8. Light switch
9. Cab work light switch
10. After-treatment system switch
11. Bluetooth control panel
12. Air conditioning and heating control panel
13. Wiper control panel
14. Quick coupler switch

TAKE A SEAT IN BUSINESS CLASS

The ergonomic controls and the easy-to-view colour monitor place the machine firmly in your hands.

TOTAL CONTROL IN ALL SIMPLICITY

DYNAMIC POWER MANAGEMENT

- Automatic travel speed range selection (slow/fast)
- Activating the power boost control system increases digging force by 10%
- A one-touch deceleration button immediately reduces engine speed to low idle
- Auto-idling starts 4 seconds (adjustable) after all controls are returned to neutral – reducing fuel consumption and noise levels in the cab

INTELLIGENT FLOATING BOOM MODE (OPTIONAL)

The “intelligent floating boom” function allows the boom to move up and down freely according to the application:

- Hydraulic breaker setting: during boom down operation, the boom moves down freely under its own weight. The result is reduced shock and vibration and longer breaker service life
- Full float setting: during boom down selection, the boom is allowed to rise and fall as required while the bucket is drawn across the ground

4 WORK MODES AND 4 POWER MODES

Delivers the needed power according to your specific application while minimizing fuel consumption:

- 1-way mode, 2-way mode, Digging mode and Lifting mode
- Power Plus mode, Power mode, Standard mode, Economy mode

EXPERT FINGERTIP CONTROL

- The new multi-function 8" touchscreen displays all useful information in a visual and intuitive format.
- At a glance, you can check the machine’s status and settings to achieve optimal efficiency.
- Develon’s unique jog shuttle switch gives you easy and precise control over all machine functions.
- Highly sensitive and low-effort joysticks enable you to work safely, smoothly and confidently.
- The proportional thumb switches on the joysticks can be mounted horizontally or vertically, as the operator prefers, for optimal control of hydraulic attachments.









SIMPLE MAINTENANCE WITH MAXIMUM UPTIME

MAINTENANCE ACCESS MADE SIMPLE

- Large guard rails are installed along with anti-slip steps and plates, for safer, easier access to the whole upper structure.
- The air conditioning filter is placed on the side of the cab for easy access. The filter's cover can be locked and opened with the starter key.
- A battery cut-off switch makes it easy to disconnect the battery for long-term storage.
- The hour meter display can be easily checked from ground level.
- Shut-off valves have been fitted on the pre-filter piping line and fuel tank drain piping to make servicing easier and prevent pollution from leakage.
- Engine parts can be easily reached via the top and side panels.
- The radiator and oil cooler have been separated, making access for cleaning easier.
- For extra accessibility and servicing convenience, all filters (engine oil filter, fuel pre-filters, fuel filters and pilot filter) are located in the pump compartment.
- An electric transfer pump for initial priming of fuel filters is featured as standard.

ADBLUE® TANK

Connected to the ECU, sensors in the tank detect low levels of AdBlue® or any other system malfunction.

CENTRALISED GREASING POINTS

To make maintenance easier, the greasing points have been centralised. An automatic lubrication system is available as an option.



TECHNICAL SPECIFICATIONS

ENGINE

Designed to deliver superior performance and fuel efficiency, the Develon DL08V diesel engine fully meets latest stage V emission regulations. To optimise machine performance, the engine uses high-pressure fuel injectors, air-to-air inter-cooler and electronic engine controls. 4-Cycle Water-Cooled, Variable Geometry Turbocharged, Diesel Oxidation Catalyst (DOC) & Selective Catalytic Reduction (SCR) and Diesel Particulate Filter (DPF).

Model

Develon DL08V

No. of cylinders

6

Rated power at 1800 rpm

SAE J1995	202 kW (271 hp)
SAE J1349	199 kW (267 hp)

Max. torque at 1300 rpm

1275 Nm

Idle (low - high)

800 [±10] - 1900 [±25] rpm

Displacement

7640 cm³

Bore × stroke

108 mm × 139 mm

Starter

24 V / 6 kW

Batteries - Alternator

2 × 12 V, 150 Ah - 24 V, 80 A

Air filter

Double element air cleaner and pre-filtered Cyclone Turbo dust separator

HYDRAULIC SYSTEM

The e-EPOS (Electronic Power Optimising System) is the brain of the excavator – minimising fuel consumption and optimizing the efficiency of the hydraulic system for all working conditions.
To harmonise the operation of the engine and the hydraulics, the e-EPOS is connected to the engine's electronic control unit (ECU) via a data transfer link.

- The hydraulic system enables independent or combined operations
- 2 travel speeds offer either increased torque or high speed
- Cross-sensing pump system for fuel savings
- Auto-deceleration system
- 4 operating modes, 4 power modes
- Flow and pressure control of auxiliary hydraulic circuits from control panel
- Computer-aided pump flow control

Main pumps

2 × variable displacement tandem axial piston pumps

Maximum flow at 1800 rpm	2 × 248 l/min

Pilot pump

Gear pump

Maximum flow at 1800 rpm	27 l/min

Relief valve settings

Implement	350 (370) kgf/cm²
Travel	350 kgf/cm²
Swing	295 kgf/cm²
Pilot	40 kgf/cm²

UNDERCARRIAGE

Extremely robust construction throughout - made of high-quality, durable materials, with all welded structures designed to limit stresses.

- Track rollers lubricated for life
- Idlers and sprockets fitted with floating seals
- Track shoes made of induction-hardened alloy with triple grouser
- Heat-treated connecting pins
- Hydraulic track adjuster with shock-absorbing tension mechanism

Upper rollers (standard shoe)

2

Lower rollers

9

Number of links & shoes per side

48

Link pitch

216 mm

HYDRAULIC CYLINDERS

High-strength steel piston rods and cylinder bodies. Shock-absorbing mechanism fitted in all cylinders for shock-free operation and extended piston life.

Cylinders	Quantity	Bore × rod diameter × stroke (mm)
Boom	2	140 × 95 × 1450
Arm	1	150 × 105 × 1670
Bucket	1	135 × 90 × 1150
SLR Bucket	1	95 × 65 × 900
Two-piece boom	1	170 × 115 × 1341

CAB

The air-conditioning and heating systems are integrated for optimal climate control. An automatically-controlled fan supplies the pressurised and filtered cab air, which is distributed throughout the cab from multiple vents.
The heated air suspension, adjustable operator's seat includes a seat belt. The operator can adjust the ergonomic seat and joystick console separately according to his preferences.

A-weighted emission sound pressure level at the operator's position, LpAd (ISO 6396:2008)

72 dB(A)

A-weighted sound power level, LwAd (2000/14/EC)

Declared: 104 dB(A)
Measured: 103 dB(A)

FLUID CAPACITIES

Fuel tank	500 l
Cooling system (radiator)	50 l
Urea (def) tank	63 l
Hydraulic oil tank	280 l
Engine oil	42 l
Swing drive	7 l
Travel device	2 × 7 l

SWING MECHANISM

The swing mechanism uses an axial piston motor, driving a 2-stage planetary reduction gear bathed in oil for maximum torque.

- Swing bearing: single-row, shear type ball bearing with induction hardened internal gear
- Internal gear and pinion immersed in lubricant

Maximum swing speed

9.88 rpm

Maximum swing torque

12137 kgf·m

DRIVE

Each track is driven by an independent, high-torque axial piston motor through a planetary reduction gearbox. Two levers / foot pedals guarantee smooth travel with counter-rotation on demand. The track frame protects the travel motor, brake and planetary gears. The multi-disc track brakes are spring-applied and hydraulic released.

Travel speed (low - high)

3.0 - 5.5 km/h

Maximum traction

35 t

Maximum gradeability

35° / 70%

WEIGHT

	Shoe width (mm)	Machine weight (t)	Ground pressure (kgf/cm²)
Triple grouser	600 (Std)	31.5	0.59
	700	31.9	0.52
	800	32.3	0.46
	850	32.4	0.44
Double grouser	600	32.2	0.60

TECHNICAL SPECIFICATIONS

COMPONENT WEIGHTS

Item	Unit	Weight	Remarks
Upper structure without front	kg	13900	With counterweight
Lower structure assembly	kg	11350	
Counterweight	kg	5400	
Front assembly	kg	6300	Based on standard *
Boom	mm kg	6245 / 6260 two-piece 2229 / 2496	Including bushing
Arm	mm kg	2500 / 2850 HD / 3100 / 3100 HD / 3750 967 / 1085 / 1038 / 1135 / 1178	

(*) Standard front – 6245 mm boom, 3100 mm arm, 1.27 m³ GP bucket.

BUCKETS

					Standard track / narrow track						
Bucket Type	Capacity (m³) SAE	Width (mm)		Weight (kg)	One-piece boom				Two-piece boom		
		With side cutters	W/O side cutters		Arm 2.50 m	Arm 2.85 m	Arm 3.10 m	Arm 3.75 m	Arm 2.50 m	Arm 3.10 m	Arm 3.75 m
GP	0.80	1037	962	860	A / A	A / A	A / A	A / A	A / A	A / A	A / A
	1.03	1247	1172	990	A / A	A / A	A / A	A / B	A / A	A / A	A / B
	1.27	1445	1376	1104	A / A	A / A	A / B	A / C	A / B	A / C	A / D
	1.50	1657	1582	1220	A / B	A / B	B / C	C / D	A / C	A / D	B / -
	1.75	1867	1792	1310	B / C	C / C	C / D	D / -	A / D	C / -	C / -
HD	1.04	1108	1070	1024	A / A	A / A	A / A	A / B	A / A	A / B	A / B
	1.23	1258	1220	1104	A / A	A / A	A / B	B / C	A / A	A / C	A / C
	1.47	1458	1420	1211	A / B	A / B	A / C	B / D	A / C	A / D	B / D
	1.60	1558	1520	1264	A / C	B / C	B / D	C / D	A / D	A / D	B / -
	1.72	1658	1620	1338	B / C	C / C	C / D	D / -	A / D	C / -	C / -
Rock	1.16	-	1432	1200	A / A	A / A	A / B	A / C	A / A	A / B	A / C

A: Suitable for materials with a density less than or equal to 2100 kg/m³ **B: Suitable for materials with a density less than or equal to 1800 kg/m³**
C: Suitable for materials with a density less than or equal to 1500 kg/m³ **D: Suitable for materials with a density less than or equal to 1200 kg/m³**
Based on ISO 10567 and SAE J296, arm length without quick-coupler. For reference only.

DEVELON BUCKETS

4 More. More choice - More durable - More strength - More performance!

General Construction Bucket



The General purpose bucket is designed for digging and re-handling soft to medium materials (e.g. materials with low wear characteristics such as top-soil, loam, coal).

Heavy Construction Bucket



The Heavy duty bucket is designed for mass excavations in dense materials such as hard packed clay, shot limestone, limited rock content and gravel.

Severe Mining Bucket



The Severe duty bucket is designed for durability in digging compact materials like loose or blasted rock, hard packed clay and stone.

X-treme Mining Bucket



The X-treme duty bucket is designed as a long-life version of the Severe duty bucket for digging in the most abrasive materials.

DIMENSIONS

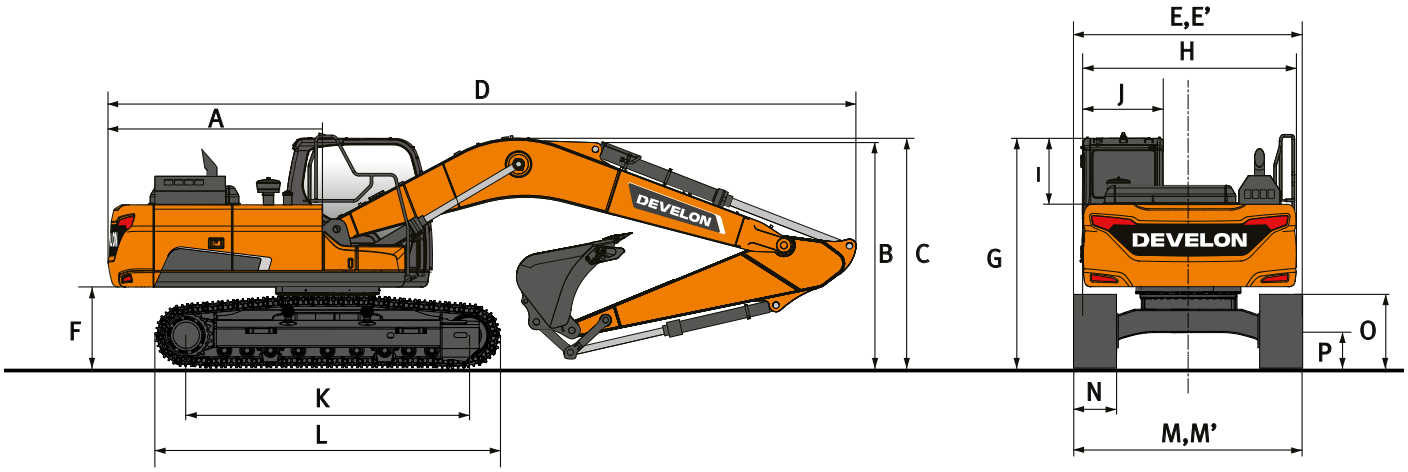

DIMENSIONS

	Unit	One-piece boom				Two-piece boom		
Boom length	**mm**	**6245**				**3245 LB + 3050 UB**		
Arm length	**mm**	**2500**	**2850**	**3100**	**3750**	**2500**	**3100**	**3750**
Bucket capacity	**m³**	**1.51**	**1.27**	**1.27**	**1.03**	**1.51**	**1.27**	**1.03**
A Tail swing radius	mm	3230	3230	3230	3230	3230	3230	3230
B Shipping height (boom)	mm	3385	3495	3265	3455	3455	3465	3700
C Shipping height (hose)	mm	3495	3615	3370	3575	3455	3465	3700
D Shipping length	mm	10765	10705	10605	10705	10790	10660	10660
E Shipping width std.	mm	3200	3200	3200	3200	3200	3200	3200
E' Shipping width narrow	mm	3000	3000	3000	3000	3000	3000	3000
F Counterweight clearance	mm	1120	1120	1120	1120	1120	1120	1120
G Height over cab	mm	3050	3050	3050	3050	3050	3050	3050
H House width	mm	2960	2960	2960	2960	2960	2960	2960
I Cab height above house	mm	853	853	853	853	853	853	853
J Cab width	mm	1010	1010	1010	1010	1010	1010	1010
K Tumbler distance	mm	4040	4040	4040	4040	4040	4040	4040
L Track length	mm	4940	4940	4940	4940	4940	4940	4940
M Undercarriage width std	mm	3200	3200	3200	3200	3200	3200	3200
M' Undercarriage width narrow	mm	3000	3000	3000	3000	3000	3000	3000
N Shoe width std.	mm	600	600	600	600	600	600	600
O Track height	mm	970	970	970	970	970	970	970
P Ground clearance	mm	470	470	470	470	470	470	470

WORKING RANGE

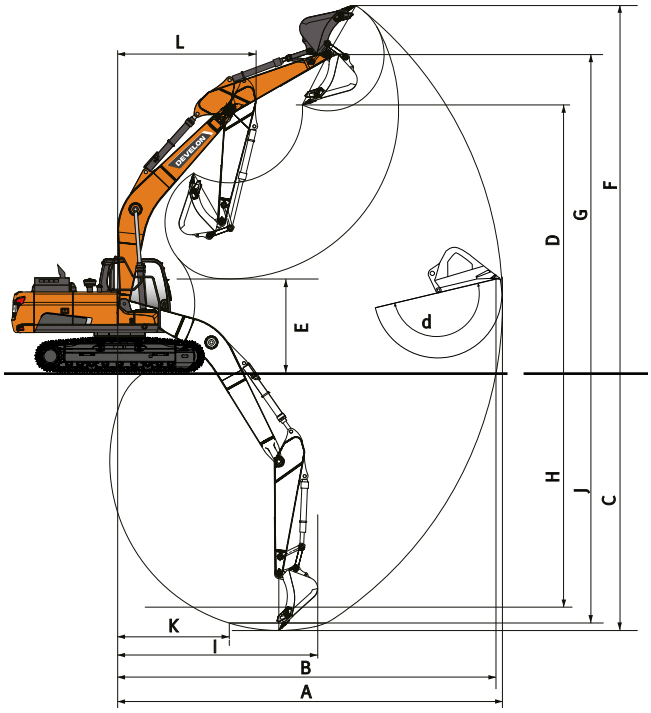

WORKING RANGE

	Unit	One-piece boom				Two-piece boom		
Boom length	**mm**	**6245**				**3245 LB + 3050 UB**		
Arm length	**mm**	**2500**	**2850**	**3100**	**3750**	**2500**	**3100**	**3750**
Bucket capacity	**m³**	**1.51**	**1.27**	**1.27**	**1.03**	**1.51**	**1.27**	**1.03**
A Max. digging reach	mm	10155	10415	10725	11240	10860	11280	11415
B Max. digging reach (ground)	mm	9950	10215	10530	11065	10075	10670	11235
C Max. digging depth	mm	6700	7055	7305	7950	6410	7010	7605
D Max. loading height	mm	6990	6995	7280	7395	8415	8895	9255
E Min. loading height	mm	3370	3010	2750	2110	4290	3565	2950
F Max. digging height	mm	10010	9980	10325	10405	11615	12085	12450
G Max. bucket pin height	mm	8585	8600	8880	8990	10015	10495	10855
H Max. vertical wall depth	mm	5395	5450	6125	6600	5185	5840	6415
I Max. radius vertical	mm	6840	7175	6840	7070	6820	6855	7035
J Max. digging depth (8´level)	mm	6465	6815	7110	7755	6295	6905	7515
K Min. radius 8´level	mm	2970	2905	3000	2920	1825	1820	1820
L Min. swing radius	mm	4045	4070	4040	4050	3065	2900	3105
d Bucket angle	°	176	176	175	174	176	175	174

DIGGING FORCES (ISO)

	Unit	One-piece boom				Two-piece boom		
Boom length	**mm**	**6245**				**3245 LB + 3050 UB**		
Arm length	**mm**	**2500**	**2850**	**3100**	**3750**	**2500**	**3100**	**3750**
Bucket capacity	**m³**	**1.51**	**1.27**	**1.27**	**1.03**	**1.51**	**1.27**	**1.03**
BUCKET (Normal/Press. Up)	ton	18.9 / 20.0	18.9 / 20.0	18.9 / 20.0	18.9 / 20.0	18.9 / 20.0	18.9 / 20.0	18.9 / 20.0
ARM (Normal/Press. Up)	ton	16.0 / 17.0	N/A	13.2 / 13.9	11.7 / 12.4	16.0 / 17.0	13.2 / 13.9	11.7 / 12.4

LIFTING CAPACITIES

STANDARD TRACK WIDTH: 3200 MM • W/O BUCKET

(UNIT: 1000 KG)

A	1.5 m		3.0 m		4.5 m		6.0 m		7.5 m		9.0 m		Max. reach		
B															A
One-piece boom 6.25 m • Arm 2.5 m • Shoe 600 mm • Counterweight 5.4 t															
7.5 m							7.32 *	7.32 *					7.52 *	7.52 *	6.54
6.0 m							7.65 *	7.65 *	7.52 *	6.10			7.54 *	6.01	7.56
4.5 m					10.82 *	10.82 *	8.72 *	8.42	7.83 *	5.98			7.71 *	5.19	8.19
3.0 m					13.90 *	12.04	10.12 *	7.99	8.48 *	5.78			7.49	4.78	8.50
1.5 m					16.03 *	11.40	11.37 *	7.63	8.89	5.60			7.32	4.65	8.54
0.0 m					16.68 *	11.19	12.13 *	7.42	8.75	5.47			7.55	4.76	8.31
-1.5 m			12.55 *	12.55 *	16.38 *	11.20	12.17	7.36	8.73	5.45			8.28	5.20	7.79
-3.0 m			20.72 *	20.72 *	15.19 *	11.36	11.47 *	7.46					9.61 *	6.21	6.90
-4.5 m			16.85 *	16.85 *	12.47 *	11.74							9.96 *	8.84	5.47
One-piece boom 6.25 m • Arm 3.1 m • Shoe 600 mm • Counterweight 5.4 t															
7.5 m													5.39 *	5.39 *	7.27
6.0 m							6.83 *	6.83 *	6.74 *	6.22			5.18 *	5.18 *	8.19
4.5 m					9.51 *	9.51 *	7.96 *	7.96 *	7.23 *	6.06			5.19 *	4.68	8.77
3.0 m					12.60 *	12.36	9.43 *	8.10	7.98 *	5.83	5.93 *	4.39	5.38 *	4.34	9.07
1.5 m					15.15 *	11.56	10.84 *	7.69	8.77 *	5.61	6.75 *	4.30	5.77 *	4.22	9.10
0.0 m					16.40 *	11.18	11.82 *	7.42	8.73	5.45			6.43 *	4.30	8.89
-1.5 m	8.62 *	8.62 *	12.28 *	12.28 *	16.55 *	11.09	12.11	7.30	8.65	5.37			7.36	4.63	8.40
-3.0 m	14.01 *	14.01 *	18.97 *	18.97 *	15.79 *	11.19	11.83 *	7.33	8.72	5.44			8.58	5.36	7.59
-4.5 m			19.17 *	19.17 *	13.81 *	11.47	10.16 *	7.56					9.40 *	7.05	6.32
Two-piece boom • Arm 2.5 m • Shoe 600 mm • Counterweight 5.9 t															
9.0 m					11.28 *	11.28 *							9.42 *	9.42 *	5.07
7.5 m					11.01 *	11.01 *	9.81 *	9.58					8.14 *	7.93	6.70
6.0 m			11.15 *	11.15 *	12.00 *	12.00 *	10.06 *	9.43	8.74 *	6.58			7.68 *	6.28	7.70
4.5 m					13.95 *	13.95 *	10.85 *	9.05	8.96 *	6.46			7.59 *	5.47	8.31
3.0 m							11.74 *	8.60	9.49 *	6.25			7.78 *	5.08	8.62
1.5 m							12.25 *	8.23	9.48	6.06			7.68	4.96	8.66
0.0 m					15.80 *	12.08	12.07 *	8.03	9.35	5.94			7.92	5.10	8.43
-1.5 m					14.00 *	12.12	11.02 *	7.99	8.39 *	5.94			7.50 *	5.56	7.92
-3.0 m					11.13 *	11.13 *	8.81 *	8.12					6.61 *	6.61	7.05
Two-piece boom • Arm 3.1 m • Shoe 600 mm • Counterweight 5.9 t															
9.0 m							6.10 *	6.10 *					6.01 *	6.01 *	6.02
7.5 m							8.34 *	8.34 *					5.32 *	5.32 *	7.43
6.0 m					8.71 *	8.71 *	9.12 *	9.12 *	8.16 *	6.70			5.04 *	5.04 *	8.35
4.5 m					12.92 *	12.92 *	10.27 *	9.20	8.49 *	6.53			4.97 *	4.93	8.92
3.0 m					15.19 *	13.26	11.29 *	8.72	9.05 *	6.30	6.79 *	4.77	5.08 *	4.60	9.20
1.5 m					16.50 *	12.43	12.04 *	8.29	9.50	6.07	7.24	4.68	5.35 *	4.50	9.24
0.0 m					16.31 *	12.07	12.16 *	8.02	9.32	5.91	6.24 *	4.62	5.84 *	4.60	9.03
-1.5 m			11.06 *	11.06 *	14.97 *	12.01	11.48 *	7.92	8.90 *	5.85			6.68 *	4.95	8.55
-3.0 m			15.35 *	15.35 *	12.56 *	12.14	9.80 *	7.98	7.11 *	5.94			6.48 *	5.72	7.75
Two-piece boom • Arm 3.75 m • Shoe 600 mm • Counterweight 5.9 t															
10.5 m					6.72 *	6.72 *							5.95 *	5.95 *	4.82
9.0 m							6.56 *	6.56 *					4.83 *	4.83 *	6.85
7.5 m							6.89 *	6.89 *	6.09 *	6.09 *			4.39 *	4.39 *	8.12
6.0 m							7.32 *	7.32 *	7.11 *	6.81			4.21 *	4.21 *	8.96
4.5 m			9.81 *	9.81 *	9.44 *	9.44 *	9.03 *	9.03 *	7.99 *	6.61	6.18 *	4.91	4.19 *	4.19 *	9.49
3.0 m					14.11 *	13.62	10.69 *	8.85	8.56 *	6.34	6.87 *	4.79	4.29 *	4.19	9.76
1.5 m					15.94 *	12.61	11.64 *	8.35	9.26 *	6.08	7.14 *	4.65	4.53 *	4.09	9.80
0.0 m					16.42 *	12.05	12.06 *	8.00	9.29	5.87	7.11	4.55	4.94 *	4.16	9.60
-1.5 m			11.18 *	11.18 *	15.63 *	11.86	11.75 *	7.83	9.16	5.76	7.04 *	4.52	5.63 *	4.43	9.15
-3.0 m			16.22 *	16.22 *	13.75 *	11.91	10.55 *	7.82	8.05 *	5.77			6.42 *	5.00	8.41
-4.5 m					10.53 *	10.53 *	8.06 *	7.98					5.59 *	5.59 *	7.28

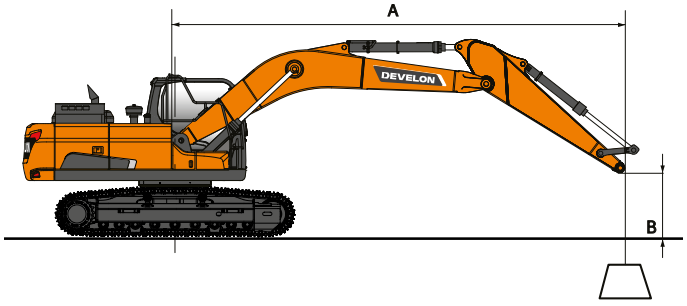

: Rating over front.
: Rating over side or 360°.

1. Lifting capacities are in compliance with ISO 10567:2007(E).
2. The load point is at the end of the arm.
3. * = The nominal loads are based on hydraulic capacity.
4. The nominal loads shown do not exceed 75% of tipping loads or 87% of hydraulic lifting capacity.
5. For lifting capacity with bucket, simply subtract the actual weight of the bucket from the values.
6. The configurations indicated do not necessarily reflect the standard equipment of the machine.

LIFTING CAPACITIES

NARROW TRACK WIDTH: 3000 MM • W/O BUCKET

(UNIT: 1000 KG)

A	1.5 m		3.0 m		4.5 m		6.0 m		7.5 m		9.0 m		Max. reach		
B															A
One-piece boom 6.25 m • Arm 2.5 m • Shoe 600 mm • Counterweight 5.4 t															
7.5 m							7.32 *	7.32 *					7.52 *	7.11	6.54
6.0 m							7.65 *	7.65 *	7.52 *	5.62			7.54 *	5.54	7.56
4.5 m					10.82 *	10.82 *	8.72 *	7.75	7.83 *	5.51			7.71 *	4.77	8.19
3.0 m					13.90 *	10.94	10.12 *	7.33	8.48 *	5.32			7.47	4.39	8.50
1.5 m					16.03 *	10.32	11.37 *	6.97	8.87	5.13			7.31	4.26	8.54
0.0 m					16.68 *	10.11	12.13 *	6.77	8.74	5.01			7.54	4.36	8.31
-1.5 m			12.55 *	12.55 *	16.38 *	10.12	12.15	6.71	8.71	4.99			8.27	4.76	7.79
-3.0 m			20.72 *	20.27	15.19 *	10.28	11.47 *	6.80					9.61 *	5.68	6.90
-4.5 m			16.85 *	16.85 *	12.47 *	10.64							9.96 *	8.07	5.47
One-piece boom 6.25 m • Arm 3.1 m • Shoe 600 mm • Counterweight 5.4 t															
7.5 m													5.39 *	5.39 *	7.27
6.0 m							6.83 *	6.83 *	6.74 *	5.74			5.18 *	4.91	8.19
4.5 m					9.51 *	9.51 *	7.96 *	7.88	7.23 *	5.58			5.19 *	4.30	8.77
3.0 m					12.60 *	11.25	9.43 *	7.44	7.98 *	5.36	5.93 *	4.03	5.38 *	3.98	9.07
1.5 m					15.15 *	10.47	10.84 *	7.03	8.77 *	5.14	6.75 *	3.94	5.77 *	3.87	9.10
0.0 m					16.40 *	10.10	11.82 *	6.76	8.72	4.98			6.43 *	3.94	8.89
-1.5 m	8.62 *	8.62 *	12.28 *	12.28 *	16.55 *	10.02	12.09	6.65	8.64	4.91			7.35	4.23	8.40
-3.0 m	14.01 *	14.01 *	18.97 *	18.97 *	15.79 *	10.11	11.83 *	6.68	8.70	4.97			8.57	4.90	7.59
-4.5 m			19.17 *	19.17 *	13.81 *	10.38	10.16 *	6.90					9.40 *	6.45	6.32
One-piece boom 6.25 m • Arm 3.75 m • Shoe 600 mm • Counterweight 5.4 t															
7.5 m									5.59 *	5.59 *			4.44 *	4.44 *	7.91
6.0 m									5.96 *	5.83			4.31 *	4.31 *	8.78
4.5 m							7.04 *	7.04 *	6.54 *	5.64	5.64 *	4.16	4.34 *	3.90	9.32
3.0 m					11.10 *	11.10 *	8.58 *	7.55	7.37 *	5.39	6.75 *	4.04	4.52 *	3.62	9.59
1.5 m					13.99 *	10.64	10.13 *	7.08	8.25 *	5.14	6.74	3.91	4.85 *	3.51	9.63
0.0 m			8.60 *	8.60 *	15.78 *	10.10	11.33 *	6.74	8.68	4.94	6.62	3.80	5.39 *	3.55	9.43
-1.5 m	8.56 *	8.56 *	12.29 *	12.29 *	16.43 *	9.90	11.98 *	6.56	8.55	4.82			6.29 *	3.78	8.97
-3.0 m	12.63 *	12.63 *	17.22 *	17.22 *	16.14 *	9.91	11.96 *	6.53	8.54	4.81			7.52	4.28	8.21
-4.5 m	17.58 *	17.58 *	21.13 *	19.87	14.78 *	10.10	11.01 *	6.66					8.92 *	5.37	7.06
-6.0 m			16.28 *	16.28 *	11.50 *	10.55							9.56 *	8.44	5.26
Two-piece boom • Arm 2.5 m • Shoe 600 mm • Counterweight 5.9 t															
9.0 m					11.28 *	11.28 *							9.42 *	9.42 *	5.07
7.5 m					11.01 *	11.01 *	9.81 *	8.48					8.14 *	7.00	6.70
6.0 m			11.15 *	11.15 *	12.00 *	12.00 *	10.06 *	8.33	8.74 *	5.79			7.68 *	5.52	7.70
4.5 m					13.95 *	12.22	10.85 *	7.96	8.96 *	5.67			7.59 *	4.79	8.31
3.0 m							11.74 *	7.52	9.33	5.47			7.53	4.43	8.62
1.5 m							12.25 *	7.15	9.12	5.28			7.38	4.32	8.66
0.0 m					15.80 *	10.38	12.07 *	6.96	8.99	5.17			7.62	4.43	8.43
-1.5 m					14.00 *	10.42	11.02 *	6.92	8.39 *	5.16			7.50 *	4.84	7.92
-3.0 m					11.13 *	10.63	8.81 *	7.05					6.61 *	5.75	7.05
Two-piece boom • Arm 3.1 m • Shoe 600 mm • Counterweight 5.9 t															
9.0 m							6.10 *	6.10 *					6.01 *	6.01 *	6.02
7.5 m							8.34 *	8.34 *					5.32 *	5.32 *	7.43
6.0 m					8.71 *	8.71 *	9.12 *	8.48	8.16 *	5.91			5.04 *	4.89	8.35
4.5 m					12.92 *	12.58	10.27 *	8.10	8.49 *	5.74			4.97 *	4.31	8.92
3.0 m					15.19 *	11.52	11.29 *	7.63	9.05 *	5.51	6.79 *	4.16	5.08 *	4.01	9.20
1.5 m					16.50 *	10.72	12.04 *	7.21	9.14	5.29	6.96	4.07	5.35 *	3.91	9.24
0.0 m					16.31 *	10.37	12.16 *	6.95	8.96	5.13	6.24 *	4.01	5.84 *	3.99	9.03
-1.5 m			11.06 *	11.06 *	14.97 *	10.31	11.48 *	6.85	8.90	5.08			6.68 *	4.30	8.55
-3.0 m			15.35 *	15.35 *	12.56 *	10.44	9.80 *	6.91	7.11 *	5.16			6.48 *	4.97	7.75
Two-piece boom • Arm 3.75 m • Shoe 600 mm • Counterweight 5.9 t															
10.5 m					6.72 *	6.72 *							5.95 *	5.95 *	4.82
9.0 m							6.56 *	6.56 *					4.83 *	4.83 *	6.85
7.5 m							6.89 *	6.89 *	6.09 *	6.08			4.39 *	4.39 *	8.12
6.0 m							7.32 *	7.32 *	7.11 *	6.01			4.21 *	4.21 *	8.96
4.5 m			9.81 *	9.81 *	9.44 *	9.44 *	9.03 *	8.26	7.99 *	5.82	6.18 *	4.30	4.19 *	3.90	9.49
3.0 m					14.11 *	11.86	10.69 *	7.76	8.56 *	5.56	6.87 *	4.17	4.29 *	3.64	9.76
1.5 m					15.94 *	10.89	11.64 *	7.27	9.16	5.29	6.95	4.04	4.53 *	3.54	9.80
0.0 m					16.42 *	10.35	12.06 *	6.93	8.93	5.09	6.83	3.94	4.94 *	3.60	9.60
-1.5 m			11.18 *	11.18 *	15.63 *	10.16	11.75 *	6.75	8.81	4.98	6.80	3.90	5.63 *	3.83	9.15
-3.0 m			16.22 *	16.22 *	13.75 *	10.21	10.55 *	6.75	8.05 *	4.99			6.42 *	4.33	8.41
-4.5 m					10.53 *	10.45	8.06 *	6.91					5.59 *	5.39	7.28

STANDARD AND OPTIONAL EQUIPMENT

● Standard ○ Optional

Engine

- ● Develon, Stage V compliant, SCR, DOC and DPF post treatment
- ● Variable Turbo Charger and air-to-air intercooler
- ● Auto-idle function
- ● Auto shut-off

Hydraulic system

- ● Boom and arm flow regeneration
- ● Swing anti-rebound valves
- ● Spare ports (valve)
- ● Flow and pressure adjustment of hydraulics lines controlled from the cab
- ● One-touch power boost function
- ● Smart Power Control (SPC)
- ● Breaker piping
- ● Cylinder cushioning & contamination seals
- ● Setting of auxiliary hydraulic flow and pressure from the display panel

Cab & Interior

- ● Pressurised, sound-insulated and CabSus mounted cab
- ● Heated, adjustable air suspension seat with adjustable headrest and armrests
- ● Air conditioning with climate control
- ● Pull-up type front window with sun roller blind and removable lower front window
- ● Sliding left window
- ● Intermittent upper and lower windshield parallel wiper
- ● Rain visor
- ● Rear window defroster switch
- ● Adjustable PPC wrist control levers for arm, boom, bucket and swing
- ● Joysticks and pedals provide proportional control of auxiliary lines for attachments
- ● Travel pedals with hand levers
- ● Jog shuttle switch
- ● 8” color LCD touch-enabled gauge panel
- ● Attachment management system
- ● Engine speed (RPM) control dial
- ● Automatic travel speed
- ● 4 operating modes & 4 working modes
- ● Electric horn
- ● Ceiling light
- ● Cup holders
- ● Multiple storage compartments (e.g. document holder under seat)
- ● Storage area (tools, etc.)
- ● Hot and cool box
- ● Flat, spacious, easy-to-clean floor
- ● Keyless start (Develon Smart Key) & remote door lock/unlock
- ● Anti-theft protection
- ● 12 V power socket and USB ports
- ● Serial communication port for laptop PC interface
- ● Remote radio ON/OFF switch
- ● Loudspeakers and connections for radio
- ● Radio + MP3 (stereo) with Bluetooth streaming and handsfree call system
- ○ Heated and cooled, adjustable air suspension seat with adjustable headrest and armrests

Safety

- ● Roll Over Protective Structure (ROPS)
- ● Boom and arm cylinder safety valves
- ● Overload warning device
- ● Large guard rails on upper structure and steps
- ● Rotating beacon
- ● Around View Camera 360°
- ● Punched metal anti-slip plates
- ● Hydraulic safety lock lever
- ● Safety glass
- ● Hammer for emergency escape
- ● Right and left rear-view mirrors
- ● Lockable fuel cap and covers
- ● Battery cut-off switch
- ● Engine restart prevention system
- ● Parking brake
- ● Light Pack (4 front & 2 rear work lights on the cab)
- ● LED lights pack: 11 powerful LED lights
- ● Emergency engine stop switch and hydraulic pump control switch
- ○ FOGS cab - top and front cab guards (ISO 10262)
- ○ Front window upper and lower guards
- ○ Ultrasonic detection
- ○ 2 extra LED lights

Other

- ● Boom: 6245 mm – arm: 3100 mm – counterweight: 5400 kg
- ● "DEVELON Fleet Management Web" Telematic system
- ● Auto shut-off fuel filler pump
- ● Double element air cleaner and pre-filtered Cyclone Turbo dust separator
- ● Fuel pre-filter with water separator sensor
- ● Dust screen for radiator/oil cooler
- ● Hydraulically-driven oil cooler fan
- ● Self-diagnostic function
- ● Alternator (24 V, 80 A) - Battery (2 × 12 V, 150 Ah)
- ● Hydrostatic 2-speed travel system with automatic shift
- ● Remote greasing for swing circle and work group pivot points
- ● Electric transfer pump for initial priming of fuel filters
- ○ Arms: 2500 mm, 2850 mm heavy duty, 3100 mm heavy duty or 3750 mm
- ○ Air compressor
- ○ Side protector (For NLC version, the side protector will increase the transportation width by 12 cm, but is easily removable.)
- ○ Booms: one piece boom 6245 mm heavy duty with 5400 kg counterweight or two-piece boom (3245 mm LB + 3050 mm UB) with 5900 kg counterweight
- ○ Heavy-duty bottom cover
- ○ Develon buckets: full range of GP, HD & Rock buckets
- ○ Develon quick-couplers
- ○ Hydraulic piping for crusher, quick-coupler, tilting and rotating buckets
- ○ Additional filter for breaker piping
- ○ Floating boom
- ○ Engine coolant heater
- ○ Oil-washed air cleaner
- ○ Straight travel pedal (not to be combined with two-piece boom)
- ○ Automatic lubrication system
- ○ Alarm for travel & swing
- ○ Double pump flow

Undercarriage

- ● X-frame with hydraulic track adjuster
- ● Normal track guards
- ● Greased and sealed track links
- ● 600 mm triple grouser shoe
- ○ Narrow undercarriage
- ○ Double track guards
- ○ Full-length track guards
- ○ 600 mm double grouser shoe
- ○ 700 mm, 800 mm, 850 mm triple grouser shoe

Powered by **Innovation**

DISCOVER MORE:
DX300LC-7K

DEVELON

DOOSAN Infracore Europe s.r.o.
IBC - Pobřežní 620/3, 186 00 Praha 8-Karlín
Czech Republic

©2023 DEVELON D4600654-EN (04-23)

Certain specification(s) are based on engineering calculations and are not actual measurements. Specification(s) are provided for comparison purposes only and are subject to change without notice.
Specification(s) for your individual Develon equipment will vary based on normal variations in design, manufacturing, operating conditions, and other factors. Pictures of Develon units may show other than standard equipment.