DEVELON

Super Long Reach Excavators

DX225LC-7 SLR
DX300LC-7 SLR
DX530LC-7 Semi-SLR & SLR



	DX225LC-7 SLR	DX300LC-7 SLR	DX530LC-7 Semi-SLR	DX530LC-7 SLR
Maximum power	174 hp	271 hp	394 hp	394 hp
Operating weight	24.6 t	33.0 t	51.9 t	52.2 t
Max. digging reach	15.4 m	17.5 m	16.1 m	19.6 m

TECHNICAL SPECIFICATIONS
DX225LC-7 SLR

ENGINE

Designed to deliver superior performance and fuel efficiency, the Develon DL06V diesel engine fully meets the latest Stage V emission regulations. To optimize machine performance, the engine uses high-pressure fuel injectors, air-to-air inter-cooler and electronic engine controls. 4-cycle water-cooled, wastegate turbocharged, Diesel Oxidation Catalyst (DOC) & Selective Catalytic Reduction (SCR) and Diesel Particulate Filter (DPF).

Model
Develon DL06V

No. of cylinders
6

Rated power at 1800 rpm

SAE J1995	129 kW (174 hp)
SAE J1349	119 kW (160 hp)

Max. torque at 1400 rpm
82 kgf·m

Idle (low - high)
800 [±50] - 1900 [±50] rpm

Displacement
5890 cm³

Bore × stroke
100 mm × 125 mm

Starter
24 V × 6 kW

Batteries - Alternator
2 × 12 V, 150 Ah – 24 V, 100 A

Air filter
Double element air cleaner and pre-filtered Cyclone Turbo dust separator

HYDRAULIC SYSTEM

The e-EPOS (Electronic Power Optimizing System) is the brain of the excavator – minimizing fuel consumption and optimizing the efficiency of the hydraulic system for all working conditions.
To harmonize the operation of the engine and the hydraulics, the e-EPOS is connected to the engine's electronic control unit (ECU) via a data transfer link.

- The hydraulic system enables independent or combined operations
- 2 travel speeds offer either increased torque or high speed
- Cross-sensing pump system for fuel savings
- Auto-deceleration system
- 4 operating modes, 4 power modes
- Computer-aided pump flow control

Main pumps
2 × variable displacement tandem axial piston pumps
Maximum flow at 1800 rpm 2 × 210.6 l/min

Pilot pump
Gear pump
Maximum flow at 1800 rpm 27 l/min

Relief valve settings

Implement	350 kgf/cm²
Travel	370 kgf/cm²
Swing	270 kgf/cm²
Pilot	40 kgf/cm²

HYDRAULIC CYLINDERS

High-strength steel piston rods and cylinder bodies. Shock-absorbing mechanism fitted in all cylinders for shock-free operation and extended piston life.

Cylinders	Quantity	Bore × rod diameter × stroke (mm)
Boom	2	125 × 85 × 1263
Arm	1	140 × 100 × 1443
Bucket	1	95 × 65 × 900

DRIVE

Each track is driven by an independent, high-torque axial piston motor through a planetary reduction gearbox. Two levers / foot pedals guarantee smooth travel with counter-rotation on demand. The track frame protects the travel motor, brake and planetary gears. The multi-disc track brakes are spring-applied and hydraulic released.

Travel speed (low - high)
3.1 - 5.5 km/h

Maximum traction
27.5 t

Maximum gradeability
70% / 35°

SWING MECHANISM

The swing mechanism uses an axial piston motor, driving a 2-stage planetary reduction gear bathed in oil for maximum torque.

- Swing bearing: single-row, shear type ball bearing with induction hardened internal gear
- Internal gear and pinion immersed in lubricant

Maximum swing speed
10.9 rpm

Maximum swing torque
8400 kgf·m

UNDERCARRIAGE

Extremely robust construction throughout - made of high-quality, durable materials, with all welded structures designed to limit stresses.

- Track rollers lubricated for life
- Idlers and sprockets fitted with floating seals
- Track shoes made of induction-hardened alloy with triple grouser
- Heat-treated connecting pins
- Hydraulic track adjuster with shock-absorbing tension mechanism

Upper rollers (standard shoe)

2

Lower rollers

8

Number of links & shoes per side

49

Link pitch

190 mm

Overall track length

4445 mm

COMPONENT WEIGHTS

Upper structure without front (incl. c/w)	11218 kg
Lower structure assembly	7744 kg
Counterweight	5300 kg
Front assembly	4322 kg
8.5 m boom (incl. bushing)	1887 kg
6.2 m arm (incl. bushing)	1055 kg

FLUID CAPACITIES

Fuel tank	400 l
Cooling system (radiator)	29.7 l
AdBlue® (DEF) tank	31.5 l
Hydraulic oil tank	195 l
Engine oil	27 l
Swing drive	5 l
Travel device	2 × 4 l

CAB

The air-conditioning and heating systems are integrated for optimal climate control. An automatically-controlled fan supplies the pressurized and filtered cab air, which is distributed throughout the cab from multiple vents.
The heated air-suspension, adjustable operator's seat includes a seat belt. The operator can adjust the ergonomic seat and joystick console separately according to his preferences.

A-weighted emission sound pressure level at the operator's position, LpAd (ISO 6396:2008)

70 dB(A)

A-weighted sound power level, LwAd (2000/14/EC)

Declared: 102 dB(A)
Measured: 101 dB(A)

WEIGHT & GROUND PRESSURE

	Shoe width (mm)	Machine weight (t)	Ground pressure (kgf/cm²)
Triple grouser	800	24.6	0.37

BUCKETS

Bucket Type	Capacity (m³) SAE	Width (mm)		Weight (kg)	8.5 m boom
		W/O side cutters	With side cutters		6.2 m arm
					800 mm shoe
DC	0.45	1500	-	357	A
GP	0.39	736	820	330	A

A: Suitable for materials with a density less than or equal to 2100 kg/m³
B : Suitable for materials with a density less than or equal to 1800 kg/m³
C: Suitable for materials with a density less than or equal to 1500 kg/m³
D: Suitable for materials with a density less than or equal to 1200 kg/m³
–: Not recommended
Based on ISO 10567 and SAE J296, arm length without quick-coupler. For reference only.

TECHNICAL SPECIFICATIONS
DX300LC-7 SLR

ENGINE

Designed to deliver superior performance and fuel efficiency, the Develon DL08V diesel engine fully meets the latest Stage V emission regulations. To optimize machine performance, the engine uses high-pressure fuel injectors, air-to-air inter-cooler and electronic engine controls. 4-cycle water-cooled, variable geometry turbocharged, Diesel Oxidation Catalyst (DOC) & Selective Catalytic Reduction (SCR) and Diesel Particulate Filter (DPF).

Model

Develon DL08V

No. of cylinders

6

Rated power at 1800 rpm

SAE J1995	202 kW (271 hp)
SAE J1349	199 kW (267 hp)

Max. torque at 1300 rpm

1275 Nm

Idle (low - high)

800 [±10] - 1900 [±25] rpm

Displacement

7640 cm³

Bore × stroke

108 mm × 139 mm

Starter

24 V / 6 kW

Batteries - Alternator

2 × 12 V, 150 Ah - 24 V, 80 A

Air filter

Double element air cleaner and pre-filtered Cyclone Turbo dust separator

HYDRAULIC SYSTEM

The e-EPOS (Electronic Power Optimizing System) is the brain of the excavator – minimizing fuel consumption and optimizing the efficiency of the hydraulic system for all working conditions.
To harmonize the operation of the engine and the hydraulics, the e-EPOS is connected to the engine's electronic control unit (ECU) via a data transfer link.

- The hydraulic system enables independent or combined operations
- 2 travel speeds offer either increased torque or high speed
- Cross-sensing pump system for fuel savings
- Auto-deceleration system
- 4 operating modes, 4 power modes
- Computer-aided pump flow control

Main pumps

2 × variable displacement tandem axial piston pumps
Maximum flow at 1800 rpm 2 × 248 l/min

Pilot pump

Gear pump
Maximum flow at 1800 rpm 27 l/min

Relief valve settings

Implement	350 (370) kgf/cm²
Travel	350 kgf/cm²
Swing	295 kgf/cm²
Pilot	40 kgf/cm²

HYDRAULIC CYLINDERS

High-strength steel piston rods and cylinder bodies. Shock-absorbing mechanism fitted in all cylinders for shock-free operation and extended piston life.

Cylinders	Quantity	Bore × rod diameter × stroke (mm)
Boom	2	140 × 95 × 1450
Arm	1	150 × 105 × 1670
Bucket	1	95 × 65 × 900

DRIVE

Each track is driven by an independent, high-torque axial piston motor through a planetary reduction gearbox. Two levers / foot pedals guarantee smooth travel with counter-rotation on demand. The track frame protects the travel motor, brake and planetary gears. The multi-disc track brakes are spring-applied and hydraulic released.

Travel speed (low - high)

3.0 - 5.5 km/h

Maximum traction

35 t

Maximum gradeability

70% / 35°

SWING MECHANISM

The swing mechanism uses an axial piston motor, driving a 2-stage planetary reduction gear bathed in oil for maximum torque.

- Swing bearing: single-row, shear type ball bearing with induction hardened internal gear
- Internal gear and pinion immersed in lubricant

Maximum swing speed

9.88 rpm

Maximum swing torque

12137 kgf·m

UNDERCARRIAGE

Extremely robust construction throughout - made of high-quality, durable materials, with all welded structures designed to limit stresses.

- Track rollers lubricated for life
- Idlers and sprockets fitted with floating seals
- Track shoes made of induction-hardened alloy with triple grouser
- Heat-treated connecting pins
- Hydraulic track adjuster with shock-absorbing tension mechanism

Upper rollers (standard shoe)

2

Lower rollers

9

Number of links & shoes per side

48

Link pitch

216 mm

COMPONENT WEIGHTS

Upper structure without front (incl. c/w)	12130 kg
Lower structure assembly	10927 kg
Counterweight	6300 kg
Front assembly	5872 kg
10.0 m boom (incl. bushing)	3066 kg
7.0 m arm (incl. bushing)	1448 kg

FLUID CAPACITIES

Fuel tank	500 l
Cooling system (radiator)	50 l
AdBlue® (DEF) tank	63 l
Hydraulic oil tank	280 l
Engine oil	42 l
Swing drive	7 l
Travel device	2 × 7 l

CAB

The air-conditioning and heating systems are integrated for optimal climate control. An automatically-controlled fan supplies the pressurized and filtered cab air, which is distributed throughout the cab from multiple vents.
The heated air suspension, adjustable operator's seat includes a seat belt. The operator can adjust the ergonomic seat and joystick console separately according to his preferences.

A-weighted emission sound pressure level at the operator's position, LpAd (ISO 6396:2008)

72 dB(A)

A-weighted sound power level, LwAd (2000/14/EC)

Declared: 104 dB(A)
Measured: 103 dB(A)

WEIGHT & GROUND PRESSURE

	Shoe width (mm)	Machine weight (t)	Ground pressure (kgf/cm²)
Triple grouser	800	33.0	0.47

BUCKETS

Bucket Type	Capacity (m³) SAE	Width (mm)		Weight (kg)	10.0 m boom
		W/O side cutters	With side cutters		7.0 m arm
					800 mm shoe
DC	0.45	1500	-	357	A
	0.54	1800	-	405	A
GP	0.64	1083	1167	439	B

A: Suitable for materials with a density less than or equal to 2100 kg/m³
B : Suitable for materials with a density less than or equal to 1800 kg/m³
C: Suitable for materials with a density less than or equal to 1500 kg/m³
D: Suitable for materials with a density less than or equal to 1200 kg/m³
–: Not recommended
Based on ISO 10567 and SAE J296, arm length without quick-coupler. For reference only.

TECHNICAL SPECIFICATIONS DX530LC-7 SLR & Semi-SLR

ENGINE

Designed to deliver superior performance and fuel efficiency, the Scania DC13 diesel engine fully meets the latest Stage V emission regulations. To optimize machine performance, the engine uses high-pressure fuel injectors, air-to-air inter-cooler and electronic engine controls. 4-cycle water-cooled, variable geometry turbocharged, Diesel Oxidation Catalyst (DOC) & Selective Catalytic Reduction (SCR) and Diesel Particulate Filter (DPF).

Model

Scania DC13

No. of cylinders

6

Rated power at 1800 rpm

SAE J1995	294 kW (394.2 hp)
SAE J1349	289 kW (387.6 hp)

Max. torque at 900-1500 rpm

189.8 kgf·m

Idle (low - high)

750 [±20] - 1900 [±25] rpm

Displacement

12700 cm³

Bore × stroke

130 mm × 160 mm

Starter

24 V / 6 kW

Batteries - Alternator

2 × 12 V, 200 Ah - 28 V, 100 A

Air filter

Double element air cleaner and pre-filtered Cyclone Turbo dust separator

HYDRAULIC SYSTEM

The e-EPOS (Electronic Power Optimizing System) is the brain of the excavator – minimizing fuel consumption and optimizing the efficiency of the hydraulic system for all working conditions.
To harmonize the operation of the engine and the hydraulics, the e-EPOS is connected to the engine's electronic control unit (ECU) via a data transfer link.

- The hydraulic system enables independent or combined operations
- 2 travel speeds offer either increased torque or high speed
- Cross-sensing pump system for fuel savings
- Auto-deceleration system
- 4 operating modes, 4 power modes
- Computer-aided pump flow control

Main pumps

2 × parallel, bent axis, axial piston pumps

Maximum flow at 1800 rpm	2 × 390 l/min

Pilot pump

Gear pump

Maximum flow at 1800 rpm	24 l/min

Relief valve settings

Implement	380 bar (387.5 kgf/cm²)
Travel	343 bar (350 kgf/cm²)
Swing	294 bar (300 kgf/cm²)
Pilot	40 bar (40.8 kgf/cm²)

HYDRAULIC CYLINDERS

High-strength steel piston rods and cylinder bodies. Shock-absorbing mechanism fitted in all cylinders for shock-free operation and extended piston life.

Cylinders	Quantity	Bore × rod diameter × stroke (mm)
Boom	2	170 × 115 × 1650
Arm	1	190 × 130 × 1980
Bucket for 6.0 m arm	1	140 × 90 × 1150
Bucket for 8.0 m arm	1	120 × 80 × 1060

DRIVE

Each track is driven by an independent, high-torque axial piston motor through a planetary reduction gearbox. Two levers / foot pedals guarantee smooth travel with counter-rotation on demand. The track frame protects the travel motor, brake and planetary gears. The multi-disc track brakes are spring-applied and hydraulic released.

Travel speed (low - high)

3.2 - 5.6 km/h

Maximum traction

45.7 t

Maximum gradeability

70% / 35°

SWING MECHANISM

The swing mechanism uses an axial piston motor, driving a 2-stage planetary reduction gear bathed in oil for maximum torque.

- Swing bearing: single-row, shear type ball bearing with induction hardened internal gear
- Internal gear and pinion immersed in lubricant

Maximum swing speed

9.2 rpm

Maximum swing torque

20130 kgf·m

UNDERCARRIAGE

Extremely robust construction throughout - made of high-quality, durable materials, with all welded structures designed to limit stresses.

- Track rollers lubricated for life
- Idlers and sprockets fitted with floating seals
- Track shoes made of induction-hardened alloy with triple grouser
- Heat-treated connecting pins
- Hydraulic track adjuster with shock-absorbing tension mechanism

Upper rollers (standard shoe)

3 (variable track)

Lower rollers

9

Number of links & shoes per side

53

Link pitch

215.9 mm

COMPONENT WEIGHTS

Upper structure without front (excl. c/w)	11467 kg
Lower structure assembly	19951 kg
Counterweight	11100 kg
Front assembly Semi-SLR	8870 kg
9.0 m Semi-SLR boom (incl. bushing)	4010 kg
6.0 m Semi-SLR arm (incl. bushing)	2040 kg
Front assembly SLR	9365 kg
11.0 m SLR boom (incl. bushing)	4500 kg
8.0 m SLR arm (incl. bushing)	2460 kg

FLUID CAPACITIES

Fuel tank	626 l
Cooling system (radiator)	52.5 l
AdBlue® (DEF) tank	70 l
Hydraulic oil tank	390 l
Engine oil	45 l
Swing drive	2 × 5 l
Travel device	2 × 9 l

CAB

The air-conditioning and heating systems are integrated for optimal climate control. An automatically-controlled fan supplies the pressurized and filtered cab air, which is distributed throughout the cab from multiple vents.
The heated air-suspension, adjustable operator's seat includes a seat belt. The operator can adjust the ergonomic seat and joystick console separately according to his preferences.

A-weighted emission sound pressure level at the operator's position, LpAd (ISO 6396:2008)

72 dB(A)

A-weighted sound power level, LwAd (2000/14/EC)

Declared: 106 dB(A)
Measured: 105 dB(A)

WEIGHT & GROUND PRESSURE

	Shoe width (mm)	Machine weight (t)	Ground pressure (kgf/cm²)
Triple grouser	600 (Std)	52.3*	0.91
	800	54.2**	0.70

* standard track / ** wide track

BUCKETS

Bucket Type	Capacity (m³) SAE	Width (mm)		Weight (kg)	Semi-SLR	SLR
		W/O side cutters	With side cutters		9.0 m boom / 6.0 m arm / 600 mm shoe	11.0 m boom / 8.0 m arm / 600 mm shoe
SLR	0.92	1173	1236	745	-	A
Semi-SLR	1.27	1376	1445	1160	A	-
Semi-DC*	1.12	1500	-	1040	A	-
	1.37	1800	-	1430	A	-

A: Suitable for materials with a density less than or equal to 2100 kg/m³
B : Suitable for materials with a density less than or equal to 1800 kg/m³
C: Suitable for materials with a density less than or equal to 1500 kg/m³
D: Suitable for materials with a density less than or equal to 1200 kg/m³
–: Not recommended
* Ditch cleaning bucket
Based on ISO 10567 and SAE J296, arm length without quick-coupler. For reference only.

DIMENSIONS

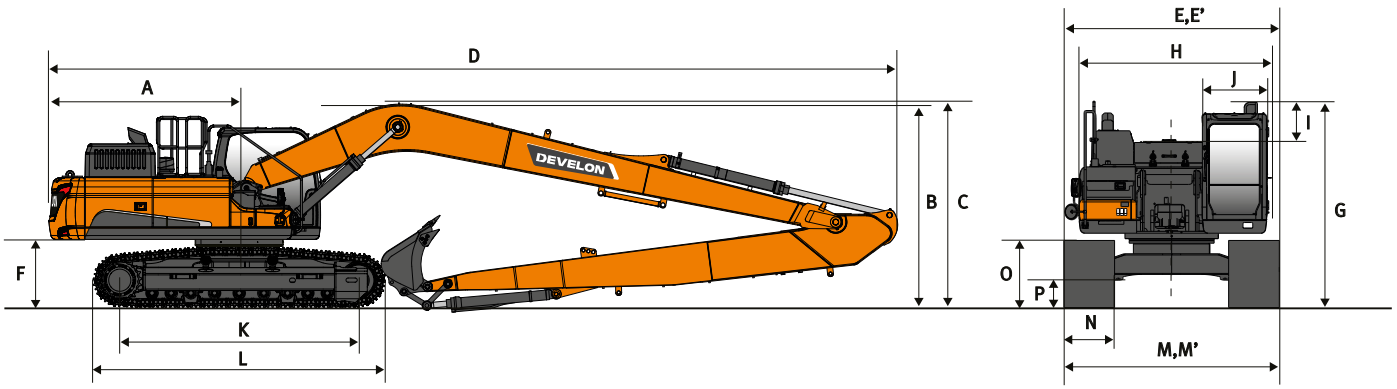

DIMENSIONS

	Unit	DX225LC-7 SLR	DX300LC-7 SLR	DX530LC-7 Semi-SLR	DX530LC-7 SLR
Boom length	**mm**	**8500**	**10000**	**9000**	**11000**
Arm length	**mm**	**6200**	**7000**	**6000**	**8000**
Bucket capacity	**m³**	**0.39**	**0.64**	**1.27**	**0.92**
A Tail swing radius	mm	2909	3230	3800	3800
B Shipping height (boom)	mm	3295	3365	3765	3935
C Shipping height (hose)	mm	3385	3475	3910	4070
D Shipping length	mm	12390	14400	14155	16195
E Shipping width (std/narrow)	mm	3190 / -	3200 / 3000	-	-
E' Shipping width (std/wide)	mm	-	-	2990 / 3340	2990 / 3340
F Counterweight clearance *	mm	1092	1120	1430	1430
G Height over cab	mm	2980	3055	3350	3350
H House width	mm	2710	2960	2990	2990
I Cab height above house	mm	840	853	845	845
J Cab width	mm	1010	1010	1010	1010
K Tumbler distance	mm	3650	4040	4475	4475
L Track length	mm	4445	4940	5455	5455
M Undercarriage width	mm	2990	3400	-	-
M' Undercarriage width retracted (std/wide)	mm	-	-	2990 / 3340	2990 / 3340
M' Undercarriage width extended (std/wide)	mm	-	-	3490 / 3900	3490 / 3900
N Shoe width (STD)	mm	600	800	600	600
O Track height *	mm	945	970	1180	1180
P Ground clearance *	mm	450.5	475	730	730

*** : without grouser**

DIGGING FORCES (ISO)

	Unit	DX225LC-7 SLR	DX300LC-7 SLR	DX530LC-7 Semi-SLR	DX530LC-7 SLR
Boom length	**mm**	**8500**	**10000**	**9000**	**11000**
Arm length	**mm**	**6200**	**7000**	**6000**	**8000**
Bucket capacity	**m³**	**0.39**	**0.64**	**1.27**	**0.92**
BUCKET (Normal/Press. up)	t	10.0 / 10.6	10.0 / 10.5	19.2 / 20.3	14.3 / 15.2
ARM (Normal/Press. up)	t	6.0 / 6.3	7.1 / 7.5	13.8 / 15.1	10.9 / 11.9

WORKING RANGE

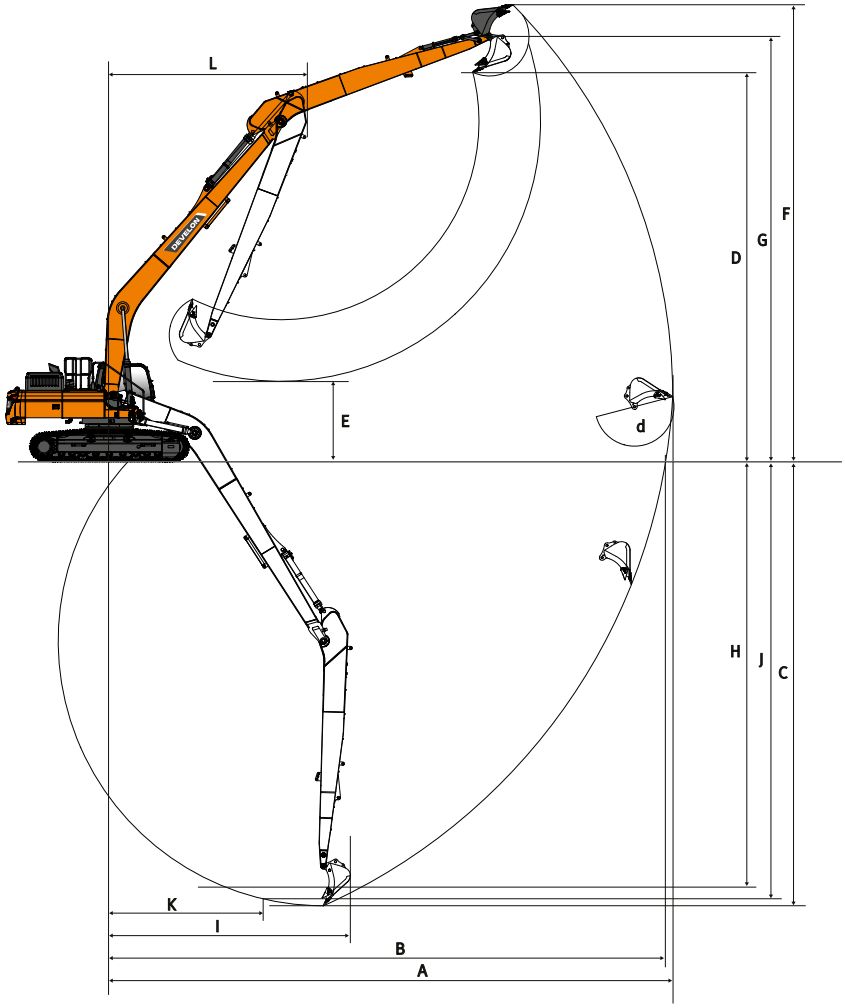

WORKING RANGE

	Unit	DX225LC-7 SLR	DX300LC-7 SLR	DX530LC-7 Semi-SLR	DX530LC-7 SLR
Boom length	**mm**	**8500**	**10000**	**9000**	**11000**
Arm length	**mm**	**6200**	**7000**	**6000**	**8000**
Bucket capacity	**m³**	**0.39**	**0.64**	**1.27**	**0.92**
A Max. digging reach	mm	15365	17510	16060	19615
B Max. digging reach (ground)	mm	15255	17390	15870	19455
C Max. digging depth	mm	11660	13780	11795	15125
D Max. loading height	mm	10830	11990	9800	11890
E Min. loading height	mm	2015	2345	2076	1465
F Max. digging height	mm	13045	14195	12755	14435
G Max. bucket pin height	mm	12050	13205	11415	13355
H Max. vertical wall depth	mm	9715	11590	10300	12805
I Max. radius vertical	mm	10060	10900	9515	12165
J Max. digging depth (8' level)	mm	11555	13645	11670	15010
K Min. radius (8' level)	mm	4815	5150	4885	6165
L Min. swing radius	mm	4970	6120	6525	7825
d Bucket angle	°	177	169	175.2	177.6

LIFTING CAPACITIES
DX225LC-7 SLR

DX225LC-7 SLR

(UNIT: 1000 KG)

A	1.5 m		3.0 m		4.5 m		6.0 m		7.5 m		9.0 m		10.5 m		12.0 m		13.5 m		Max. reach		
B																					A

8.5 m boom • 6.2 m arm • 600 mm shoe • 5.3 t counterweight • without dozer blade • without bucket

12.0 m																			1.05 *	1.05 *	9.79
10.5 m													1.63 *	1.63 *					0.96 *	0.96 *	11.16
9.0 m													2.25 *	2.25 *	1.15 *	1.15 *			0.91 *	0.91 *	12.18
7.5 m													2.61 *	2.59	1.91 *	1.91 *			0.88 *	0.88 *	12.95
6.0 m													2.78 *	2.51	2.38 *	1.93	0.90 *	0.90 *	0.88 *	0.88 *	13.52
4.5 m											3.22 *	3.12	2.99 *	2.39	2.79 *	1.86	1.49 *	1.45	0.89 *	0.89 *	13.89
3.0 m			10.14 *	10.14 *	6.71 *	6.71 *	5.03 *	5.03 *	4.15 *	3.86	3.60 *	2.91	3.24 *	2.25	2.84	1.77	1.84 *	1.40	0.92 *	0.92 *	14.10
1.5 m					8.52 *	7.07	6.03 *	4.81	4.75 *	3.53	4.00 *	2.70	3.38	2.11	2.74	1.68	2.04 *	1.35	0.97 *	0.97 *	14.14
0.0 m			3.89 *	3.89 *	7.74 *	6.35	6.81 *	4.36	5.27 *	3.24	4.07	2.51	3.25	1.99	2.66	1.60	2.03 *	1.30	1.04 *	1.04 *	14.03
-1.5 m	3.74 *	3.74 *	4.71 *	4.71 *	7.47 *	6.02	6.96	4.07	5.06	3.03	3.91	2.36	3.14	1.89	2.59	1.53	1.68 *	1.27	1.14 *	1.14 *	13.74
-3.0 m	4.76 *	4.76 *	5.74 *	5.74 *	8.15 *	5.90	6.79	3.93	4.92	2.90	3.81	2.26	3.07	1.82	2.54	1.49			1.28 *	1.28 *	13.29
-4.5 m	5.83 *	5.83 *	6.91 *	6.91 *	9.31 *	5.92	6.75	3.89	4.86	2.85	3.76	2.22	3.04	1.79	2.54	1.49			1.48 *	1.39	12.64
-6.0 m	6.99 *	6.99 *	8.27 *	8.27 *	9.37 *	6.03	6.79	3.93	4.87	2.86	3.77	2.23	3.06	1.81					1.80 *	1.57	11.75
-7.5 m	8.27 *	8.27 *	9.87 *	9.87 *	8.42 *	6.22	6.52 *	4.04	4.96	2.94	3.84	2.30	2.75 *	1.89					2.36 *	1.88	10.58
-9.0 m			9.37 *	9.37 *	6.97 *	6.53	5.47 *	4.24	4.35 *	3.11	3.32 *	2.46							3.29 *	2.46	9.02

8.5 m boom • 6.2 m arm • 700 mm shoe • 5.3 t counterweight • without dozer blade • without bucket

12.0 m																			1.05 *	1.05 *	9.79
10.5 m													1.63 *	1.63 *					0.96 *	0.96 *	11.16
9.0 m													2.25 *	2.25 *	1.15 *	1.15 *			0.91 *	0.91 *	12.18
7.5 m													2.61 *	2.61 *	1.91 *	1.91 *			0.88 *	0.88 *	12.95
6.0 m													2.78 *	2.67	2.38 *	2.07	0.90 *	0.90 *	0.88 *	0.88 *	13.52
4.5 m											3.22 *	3.22 *	2.99 *	2.55	2.79 *	2.00	1.49 *	1.49 *	0.89 *	0.89 *	13.89
3.0 m			10.14 *	10.14 *	6.71 *	6.71 *	5.03 *	5.03 *	4.15 *	4.10	3.60 *	3.10	3.24 *	2.42	2.99 *	1.91	1.84 *	1.52	0.92 *	0.92 *	14.10
1.5 m					8.52 *	7.53	6.03 *	5.12	4.75 *	3.76	4.00 *	2.89	3.50 *	2.28	2.91	1.82	2.04 *	1.47	0.97 *	0.97 *	14.14
0.0 m			3.89 *	3.89 *	7.74 *	6.81	6.81 *	4.67	5.27 *	3.48	4.31	2.70	3.45	2.15	2.83	1.74	2.03 *	1.42	1.04 *	1.04 *	14.03
-1.5 m	3.74 *	3.74 *	4.71 *	4.71 *	7.47 *	6.48	7.30 *	4.39	5.36	3.27	4.16	2.55	3.34	2.05	2.76	1.67	1.68 *	1.39	1.14 *	1.14 *	13.74
-3.0 m	4.76 *	4.76 *	5.74 *	5.74 *	8.15 *	6.36	7.21	4.24	5.23	3.14	4.05	2.46	3.27	1.98	2.71	1.63			1.28 *	1.28 *	13.29
-4.5 m	5.83 *	5.83 *	6.91 *	6.91 *	9.31 *	6.38	7.17	4.20	5.17	3.09	4.00	2.41	3.24	1.95	2.71	1.63			1.48 *	1.48 *	12.64
-6.0 m	6.99 *	6.99 *	8.27 *	8.27 *	9.37 *	6.49	7.14 *	4.24	5.18	3.10	4.01	2.42	3.26	1.97					1.80 *	1.71	11.75
-7.5 m	8.27 *	8.27 *	9.87 *	9.87 *	8.42 *	6.69	6.52 *	4.36	5.22 *	3.18	4.09	2.49	2.75 *	2.06					2.36 *	2.04	10.58
-9.0 m			9.37 *	9.37 *	6.97 *	6.97 *	5.47 *	4.56	4.35 *	3.34	3.32 *	2.66							3.29 *	2.65	9.02

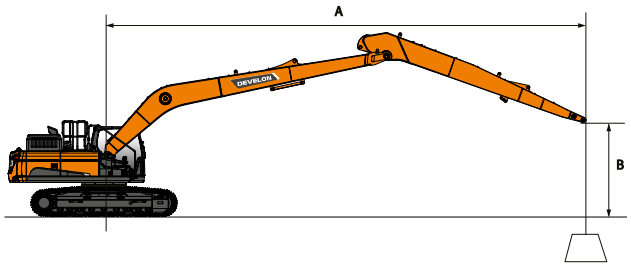

: Rating over front.
: Rating over side or 360°.

1. Lifting capacities are in compliance with ISO 10567:2007(E).
2. The load point is at the end of the arm.
3. * = The nominal loads are based on hydraulic capacity.
4. The nominal loads shown do not exceed 75% of tipping loads or 87% of hydraulic lifting capacity.
5. For lifting capacity with bucket, simply subtract the actual weight of the bucket from the values.
6. The configurations indicated do not necessarily reflect the standard equipment of the machine.

DX225LC-7 SLR

(UNIT: 1000 KG)

A	1.5 m		3.0 m		4.5 m		6.0 m		7.5 m		9.0 m		10.5 m		12.0 m		13.5 m		Max. reach		
B																					A

8.5 m boom • 6.2 m arm • 800 mm shoe • 5.3 t counterweight • without dozer blade • without bucket

12.0 m																			1.05 *	1.05 *	9.79
10.5 m													1.63 *	1.63 *					0.96 *	0.96 *	11.16
9.0 m													2.25 *	2.25 *	1.15 *	1.15 *			0.91 *	0.91 *	12.18
7.5 m													2.61 *	2.61 *	1.91 *	1.91 *			0.88 *	0.88 *	12.95
6.0 m													2.78 *	2.70	2.38 *	2.10	0.90 *	0.90 *	0.88 *	0.88 *	13.52
4.5 m											3.22 *	3.22 *	2.99 *	2.58	2.79 *	2.03	1.49 *	1.49 *	0.89 *	0.89 *	13.89
3.0 m			10.14 *	10.14 *	6.71 *	6.71 *	5.03 *	5.03 *	4.15 *	4.15 *	3.60 *	3.14	3.24 *	2.45	2.99 *	1.94	1.84 *	1.55	0.92 *	0.92 *	14.10
1.5 m					8.52 *	7.62	6.03 *	5.18	4.75 *	3.81	4.00 *	2.93	3.50 *	2.31	2.96	1.85	2.04 *	1.49	0.97 *	0.97 *	14.14
0.0 m			3.89 *	3.89 *	7.74 *	6.90	6.81 *	4.73	5.27 *	3.52	4.35 *	2.74	3.50	2.18	2.87	1.77	2.03 *	1.45	1.04 *	1.04 *	14.03
-1.5 m	3.74 *	3.74 *	4.71 *	4.71 *	7.47 *	6.57	7.30 *	4.45	5.44	3.32	4.21	2.59	3.39	2.08	2.80	1.70	1.68 *	1.41	1.14 *	1.14 *	13.74
-3.0 m	4.76 *	4.76 *	5.74 *	5.74 *	8.15 *	6.45	7.31	4.30	5.30	3.19	4.11	2.49	3.32	2.01	2.76	1.66			1.28 *	1.28 *	13.29
-4.5 m	5.83 *	5.83 *	6.91 *	6.91 *	9.31 *	6.47	7.27	4.26	5.24	3.14	4.06	2.45	3.29	1.98	2.75	1.65			1.48 *	1.48 *	12.64
-6.0 m	6.99 *	6.99 *	8.27 *	8.27 *	9.37 *	6.58	7.14 *	4.30	5.26	3.15	4.07	2.46	3.31	2.00					1.80 *	1.74	11.75
-7.5 m	8.27 *	8.27 *	9.87 *	9.87 *	8.42 *	6.78	6.52 *	4.42	5.22 *	3.23	4.15	2.53	2.75 *	2.09					2.36 *	2.07	10.58
-9.0 m			9.37 *	9.37 *	6.97 *	6.97 *	5.47 *	4.62	4.35 *	3.39	3.32 *	2.69							3.29 *	2.69	9.02

8.5 m boom • 6.2 m arm • 900 mm shoe • 5.3 t counterweight • without dozer blade • without bucket

12.0 m																			1.05 *	1.05 *	9.79
10.5 m													1.63 *	1.63 *					0.96 *	0.96 *	11.16
9.0 m													2.25 *	2.25 *	1.15 *	1.15 *			0.91 *	0.91 *	12.18
7.5 m													2.61 *	2.61 *	1.91 *	1.91 *			0.88 *	0.88 *	12.95
6.0 m													2.78 *	2.73	2.38 *	2.12	0.90 *	0.90 *	0.88 *	0.88 *	13.52
4.5 m											3.22 *	3.22 *	2.99 *	2.61	2.79 *	2.05	1.49 *	1.49 *	0.89 *	0.89 *	13.89
3.0 m			10.14 *	10.14 *	6.71 *	6.71 *	5.03 *	5.03 *	4.15 *	4.15 *	3.60 *	3.17	3.24 *	2.48	2.99 *	1.96	1.84 *	1.57	0.92 *	0.92 *	14.10
1.5 m					8.52 *	7.70	6.03 *	5.24	4.75 *	3.85	4.00 *	2.96	3.50 *	2.34	2.99	1.87	2.04 *	1.52	0.97 *	0.97 *	14.14
0.0 m			3.89 *	3.89 *	7.74 *	6.99	6.81 *	4.79	5.27 *	3.57	4.35 *	2.77	3.54	2.21	2.91	1.79	2.03 *	1.47	1.04 *	1.04 *	14.03
-1.5 m	3.74 *	3.74 *	4.71 *	4.71 *	7.47 *	6.65	7.30 *	4.51	5.51	3.36	4.27	2.62	3.44	2.11	2.84	1.73	1.68 *	1.43	1.14 *	1.14 *	13.74
-3.0 m	4.76 *	4.76 *	5.74 *	5.74 *	8.15 *	6.54	7.41	4.36	5.37	3.23	4.16	2.53	3.36	2.04	2.79	1.68			1.28 *	1.28 *	13.29
-4.5 m	5.83 *	5.83 *	6.91 *	6.91 *	9.31 *	6.55	7.36	4.32	5.31	3.18	4.12	2.48	3.33	2.01	2.79	1.68			1.48 *	1.48 *	12.64
-6.0 m	6.99 *	6.99 *	8.27 *	8.27 *	9.37 *	6.66	7.14 *	4.36	5.32	3.19	4.13	2.49	3.35	2.03					1.80 *	1.77	11.75
-7.5 m	8.27 *	8.27 *	9.87 *	9.87 *	8.42 *	6.86	6.52 *	4.47	5.22 *	3.27	4.20	2.56	2.75 *	2.12					2.36 *	2.10	10.58
-9.0 m			9.37 *	9.37 *	6.97 *	6.97 *	5.47 *	4.68	4.35 *	3.44	3.32 *	2.73							3.29 *	2.72	9.02

LIFTING CAPACITIES
DX300LC-7 SLR

DX300LC-7 SLR

(UNIT: 1000 KG)

A	1.5 m		3.0 m		4.5 m		6.0 m		7.5 m		9.0 m		10.5 m		12.0 m		13.5 m		15.0 m		Max. reach		
B																							A
10.0 m boom • 7.0 m arm • 800 mm shoe • 6.3 t counterweight • without bucket																							
12.0 m																					1.39*	1.39*	12.85
10.5 m																	1.80*	1.80*			1.33*	1.33*	13.90
9.0 m																	2.51*	2.51*			1.30*	1.30*	14.71
7.5 m															2.72*	2.72*	2.72*	2.70	1.77*	1.77*	1.29*	1.29*	15.33
6.0 m															2.93*	2.93*	2.86*	2.61	2.34*	2.08	1.30*	1.30*	15.79
4.5 m											3.73*	3.73*	3.41*	3.41*	3.18*	3.11	3.03*	2.50	2.77*	2.01	1.33*	1.33*	16.10
3.0 m					9.24*	9.24*	6.46*	6.46*	5.10*	5.10*	4.31*	4.31*	3.81*	3.65	3.47*	2.93	3.24*	2.37	3.08*	1.93	1.38*	1.38*	16.26
1.5 m					6.52*	6.52*	7.82*	7.27	5.96*	5.44	4.90*	4.24	4.22*	3.39	3.77*	2.75	3.45*	2.25	3.15	1.85	1.45*	1.45*	16.28
0.0 m			3.35*	3.35*	5.84*	5.84*	8.87*	6.59	6.71*	4.98	5.43*	3.92	4.61*	3.16	4.05*	2.58	3.62	2.13	3.07	1.77	1.54*	1.54	16.16
-1.5 m	3.92*	3.92*	4.42*	4.42*	6.29*	6.29*	9.57*	6.19	7.28*	4.65	5.87*	3.67	4.95*	2.97	4.18	2.45	3.52	2.04	3.01	1.71	1.66*	1.55	15.90
-3.0 m	4.89*	4.89*	5.51*	5.51*	7.16*	7.16*	9.95*	5.99	7.67*	4.45	6.07	3.50	4.90	2.84	4.07	2.35	3.45	1.97	2.97	1.67	1.83*	1.59	15.49
-4.5 m	5.92*	5.92*	6.65*	6.65*	8.29*	8.29*	10.09*	5.93	7.72	4.35	5.96	3.40	4.82	2.76	4.01	2.29	3.41	1.94			2.06*	1.68	14.91
-6.0 m	7.00*	7.00*	7.88*	7.88*	9.65*	9.26	10.01*	5.97	7.71	4.35	5.94	3.38	4.79	2.74	4.00	2.28	3.42	1.94			2.39*	1.83	14.16
-7.5 m	8.18*	8.18*	9.26*	9.26*	11.28*	9.50	9.71*	6.09	7.75*	4.41	5.98	3.42	4.83	2.77	4.05	2.32					2.89*	2.07	13.18
-9.0 m	9.48*	9.48*	10.85*	10.85*	11.85*	9.84	9.13*	6.30	7.35*	4.56	6.07*	3.53	4.94	2.88							3.75*	2.46	11.94
-10.5 m			12.74*	12.74*	10.48*	10.31	8.18*	6.61	6.61*	4.79	5.42*	3.74									4.46*	3.14	10.35
-12.0 m					8.37*	8.37*	6.60*	6.60*	5.25*	5.18											4.68*	4.65	8.16

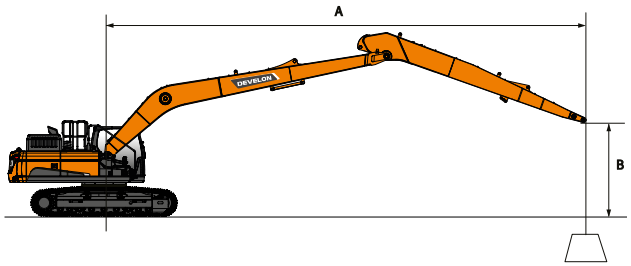

: Rating over front.
: Rating over side or 360°.

1. Lifting capacities are in compliance with ISO 10567:2007(E).
2. The load point is at the end of the arm.
3. * = The nominal loads are based on hydraulic capacity.
4. The nominal loads shown do not exceed 75% of tipping loads or 87% of hydraulic lifting capacity.
5. For lifting capacity with bucket, simply subtract the actual weight of the bucket from the values.
6. The configurations indicated do not necessarily reflect the standard equipment of the machine.

LIFTING CAPACITIES
DX530LC-7 Semi-SLR

DX530LC-7 Semi-SLR

(UNIT: 1000 KG)

A	1.5 m		3.0 m		4.5 m		6.0 m		7.5 m		9.0 m		10.5 m		12.0 m		13.5 m		Max. reach		
B																					A

9.0 m boom • 6.0 m arm • 600 mm shoe • 11.1 t counterweight • 3.9 m track

10.5 m																			4.60*	4.60*	12.09
9.0 m															6.28*	6.28*			4.74*	4.74*	12.89
7.5 m															6.42*	6.42*	4.90*	4.90*	4.80*	4.80*	13.53
6.0 m													7.03*	7.03*	6.72*	6.72*	6.34*	5.90	4.84*	4.84*	14.00
4.5 m											8.41*	8.41*	7.64*	7.64*	7.11*	7.04	6.78*	5.79	4.95*	4.95*	14.30
3.0 m					18.10*	18.10*	14.11*	14.11*	11.13*	11.13*	9.41*	9.41*	8.30*	8.30*	7.56*	6.81	7.05*	5.65	5.14*	5.05	14.44
1.5 m					11.32*	11.32*	16.30*	16.30*	12.55*	12.55*	10.36*	9.97	8.96*	8.02	8.00*	6.60	7.33*	5.52	5.41*	4.98	14.41
0.0 m			6.21*	6.21*	11.42*	11.42*	17.79*	16.67	13.66*	12.26	11.16*	9.57	9.52*	7.74	8.39*	6.41	7.36	5.40	5.78*	5.00	14.23
-1.5 m	7.51*	7.51*	8.97*	8.97*	13.29*	13.29*	18.57*	16.22	14.39*	11.88	11.73*	9.28	9.95*	7.54	8.57	6.27	7.28	5.32	6.31*	5.12	13.88
-3.0 m	10.18*	10.18*	11.85*	11.85*	16.06*	16.06*	18.75*	16.04	14.70*	11.68	12.03*	9.11	10.16*	7.41	8.49	6.19			7.05*	5.38	13.35
-4.5 m	12.98*	12.98*	15.05*	15.05*	19.62*	19.62*	18.39*	16.05	14.60*	11.63	12.00*	9.06	10.11*	7.37	8.49	6.19			7.96	5.82	12.63
-6.0 m	16.10*	16.10*	18.76*	18.76*	22.71*	22.71*	17.48*	16.22	14.03*	11.71	11.56*	9.11	9.64*	7.44					8.29*	6.54	11.66
-7.5 m	19.75*	19.75*	23.35*	23.35*	20.29*	20.29*	15.87*	15.87*	12.83*	11.94	10.49*	9.31							8.55*	7.78	10.38
-9.0 m			22.13*	22.13*	16.64*	16.64*	13.20*	13.20*	10.57*	10.57*									8.67*	8.67*	8.66

9.0 m boom • 6.0 m arm • 900 mm shoe • 11.1 t counterweight • 3.9 m track

10.5 m																			4.95*	4.95*	11.98
9.0 m															6.28*	6.28*			4.83*	4.83*	12.87
7.5 m															6.42*	6.42*	4.90*	4.90*	4.80*	4.80*	13.53
6.0 m													7.03*	7.03*	6.72*	6.72*	6.34*	6.34*	4.84*	4.84*	14.00
4.5 m											8.41*	8.41*	7.64*	7.64*	7.11*	7.11*	6.78*	6.23	4.95*	4.95*	14.30
3.0 m					18.10*	18.10*	14.11*	14.11*	11.13*	11.13*	9.41*	9.41*	8.30*	8.30*	7.56*	7.32	7.05*	6.10	5.14*	5.14*	14.44
1.5 m					11.32*	11.32*	16.30*	16.30*	12.55*	12.55*	10.36*	10.36*	8.96*	8.61	8.00*	7.11	7.33*	5.96	5.41*	5.39	14.41
0.0 m			6.21*	6.21*	11.42*	11.42*	17.79*	17.79*	13.66*	13.16	11.16*	10.29	9.52*	8.34	8.39*	6.92	7.57*	5.85	5.78*	5.41	14.23
-1.5 m	7.51*	7.51*	8.97*	8.97*	13.29*	13.29*	18.57*	17.45	14.39*	12.78	11.73*	10.00	9.95*	8.13	8.67*	6.78	7.69*	5.77	6.31*	5.55	13.88
-3.0 m	10.18*	10.18*	11.85*	11.85*	16.06*	16.06*	18.75*	17.27	14.70*	12.59	12.03*	9.83	10.16*	8.00	8.78*	6.70			7.05*	5.83	13.35
-4.5 m	12.98*	12.98*	15.05*	15.05*	19.62*	19.62*	18.39*	17.28	14.60*	12.54	12.00*	9.77	10.11*	7.97	8.60*	6.70			8.00*	6.30	12.63
-6.0 m	16.10*	16.10*	18.76*	18.76*	22.71*	22.71*	17.48*	17.45	14.03*	12.62	11.56*	9.83	9.64*	8.03					8.29*	7.06	11.66
-7.5 m	19.75*	19.75*	23.35*	23.35*	20.29*	20.29*	15.87*	15.87*	12.83*	12.83*	10.49*	10.03							8.55*	8.38	10.38
-9.0 m			22.13*	22.13*	16.64*	16.64*	13.20*	13.20*	10.57*	10.57*									8.67*	8.67*	8.66

LIFTING CAPACITIES
DX530LC-7 SLR

DX530LC-7 SLR

(UNIT: 1000 KG)

A	1.5 m		3.0 m		4.5 m		6.0 m		7.5 m		9.0 m		10.5 m		12.0 m		13.5 m		15.0 m		16.5 m		18.0 m		Max. reach		
B																											A

11.0 m boom • 8.0 m arm • 600 mm shoe • 11.1 t counterweight • 3.9 m track

13.5 m																									2.83*	2.83*	14.44
12.0 m																			3.51*	3.51*					2.87*	2.87*	15.41
10.5 m																			4.21*	4.21*					2.82*	2.82*	16.25
9.0 m																			4.28*	4.28*	3.54*	3.54*			2.80*	2.80*	16.92
7.5 m																			4.42*	4.42*	4.34*	4.20			2.82*	2.82*	17.43
6.0 m																	4.83*	4.83*	4.62*	4.62*	4.47*	4.11			2.86*	2.86*	17.79
4.5 m															5.56*	5.56*	5.15*	5.15*	4.85*	4.76	4.63*	3.99	3.00*	3.00*	2.93*	2.93*	18.03
3.0 m					12.25*	12.25*	12.22*	12.22*	9.44*	9.44*	7.82*	7.82*	6.76*	6.76*	6.03*	6.03*	5.50*	5.45	5.10*	4.57	4.81*	3.86	3.37*	3.26	3.03*	3.03*	18.13
1.5 m					8.18*	8.18*	14.18*	14.18*	10.73*	10.73*	8.70*	8.70*	7.39*	7.39*	6.49*	6.22	5.84*	5.20	5.36*	4.39	4.99*	3.73	3.49*	3.18	3.17*	3.15	18.11
0.0 m			5.13*	5.13*	8.06*	8.06*	14.15*	14.15*	11.76*	11.13	9.47*	8.76	7.96*	7.12	6.92*	5.91	6.16*	4.97	5.60*	4.22	5.12	3.62			3.35*	3.12	17.97
-1.5 m	6.01*	6.01*	6.67*	6.67*	8.97*	8.97*	13.63*	13.63*	12.50*	10.57	10.06*	8.32	8.43*	6.78	7.28*	5.65	6.44*	4.78	5.79	4.08	5.02	3.52			3.58*	3.15	17.70
-3.0 m	7.43*	7.43*	8.22*	8.22*	10.30*	10.30*	14.35*	13.97	12.94*	10.23	10.48*	8.02	8.78*	6.54	7.56*	5.46	6.58	4.63	5.68	3.98	4.96	3.46			3.89*	3.23	17.29
-4.5 m	8.91*	8.91*	9.85*	9.85*	11.91*	11.91*	15.76*	13.87	13.11*	10.06	10.69*	7.85	8.98*	6.38	7.62	5.33	6.48	4.54	5.61	3.92	4.93	3.43			4.30*	3.37	16.73
-6.0 m	10.47*	10.47*	11.59*	11.59*	13.77*	13.77*	16.40*	13.93	13.03*	10.03	10.71*	7.78	9.03*	6.32	7.56	5.27	6.45	4.50	5.60	3.91					4.86*	3.60	16.02
-7.5 m	12.14*	12.14*	13.49*	13.49*	15.92*	15.92*	15.79*	14.11	12.68*	10.12	10.50*	7.82	8.88*	6.33	7.57	5.29	6.48	4.53	5.67	3.97					5.62	3.94	15.11
-9.0 m	13.97*	13.97*	15.62*	15.62*	18.46*	18.46*	14.83*	14.41	12.03*	10.31	10.02*	7.95	8.49*	6.43	7.25*	5.39	6.17*	4.65							5.81*	4.46	14.00
-10.5 m	16.00*	16.00*	18.09*	18.09*	17.01*	17.01*	13.41*	13.41*	10.99*	10.61	9.19*	8.19	7.75*	6.64	6.49*	5.60									5.98*	5.29	12.60
-12.0 m			18.89*	18.89*	14.15*	14.15*	11.37*	11.37*	9.39*	9.39*	7.80*	7.80*	6.38*	6.38*											6.07*	6.07*	10.82
-13.5 m									6.79*	6.79*															5.89*	5.89*	8.39

11.0 m boom • 8.0 m arm • 900 mm shoe • 11.1 t counterweight • 3.9 m track

12.0 m																			3.51*	3.51*					2.87*	2.87*	15.41
10.5 m																			4.21*	4.21*					2.82*	2.82*	16.25
9.0 m																			4.28*	4.28*	3.54*	3.54*			2.80*	2.80*	16.92
7.5 m																			4.42*	4.42*	4.34*	4.34*			2.82*	2.82*	17.43
6.0 m																	4.83*	4.83*	4.62*	4.62*	4.47*	4.46			2.86*	2.86*	17.79
4.5 m															5.56*	5.56*	5.15*	5.15*	4.85*	4.85*	4.63*	4.34	3.00*	3.00*	2.93*	2.93*	18.03
3.0 m					12.25*	12.25*	12.22*	12.22*	9.44*	9.44*	7.82*	7.82*	6.76*	6.76*	6.03*	6.03*	5.50*	5.50*	5.10*	4.97	4.81*	4.21	3.37*	3.37*	3.03*	3.03*	18.13
1.5 m					8.18*	8.18*	14.18*	14.18*	10.73*	10.73*	8.70*	8.70*	7.39*	7.39*	6.49*	6.49*	5.84*	5.64	5.36*	4.78	4.99*	4.09	3.49*	3.49*	3.17*	3.17*	18.11
0.0 m			5.13*	5.13*	8.06*	8.06*	14.15*	14.15*	11.76*	11.76*	9.47*	9.47*	7.96*	7.72	6.92*	6.42	6.16*	5.41	5.60*	4.62	5.16*	3.97			3.35*	3.35*	17.97
-1.5 m	6.01*	6.01*	6.67*	6.67*	8.97*	8.97*	13.63*	13.63*	12.50*	11.47	10.06*	9.04	8.43*	7.38	7.28*	6.16	6.44*	5.22	5.80*	4.48	5.30*	3.87			3.58*	3.48	17.70
-3.0 m	7.43*	7.43*	8.22*	8.22*	10.30*	10.30*	14.35*	14.35*	12.94*	11.14	10.48*	8.74	8.78*	7.13	7.56*	5.97	6.65*	5.07	5.95*	4.37	5.37	3.81			3.89*	3.56	17.29
-4.5 m	8.91*	8.91*	9.85*	9.85*	11.91*	11.91*	15.76*	15.10	13.11*	10.97	10.69*	8.57	8.98*	6.98	7.73*	5.84	6.78*	4.98	6.02*	4.31	5.20*	3.79			4.30*	3.72	16.73
-6.0 m	10.47*	10.47*	11.59*	11.59*	13.77*	13.77*	16.40*	15.16	13.03*	10.94	10.71*	8.50	9.03*	6.91	7.77*	5.78	6.78*	4.94	5.96*	4.30					4.86*	3.96	16.02
-7.5 m	12.14*	12.14*	13.49*	13.49*	15.92*	15.92*	15.79*	15.34	12.68*	11.02	10.50*	8.54	8.88*	6.93	7.63*	5.80	6.61*	4.97	5.70*	4.37					5.63*	4.33	15.11
-9.0 m	13.97*	13.97*	15.62*	15.62*	18.46*	18.46*	14.83*	14.83*	12.03*	11.21	10.02*	8.67	8.49*	7.03	7.25*	5.90	6.17*	5.09							5.81*	4.88	14.00
-10.5 m	16.00*	16.00*	18.09*	18.09*	17.01*	17.01*	13.41*	13.41*	10.99*	10.99*	9.19*	8.90	7.75*	7.23	6.49*	6.11									5.98*	5.77	12.60
-12.0 m			18.89*	18.89*	14.15*	14.15*	11.37*	11.37*	9.39*	9.39*	7.80*	7.80*	6.38*	6.38*											6.07*	6.07*	10.82
-13.5 m									6.79*	6.79*															5.89*	5.89*	8.39

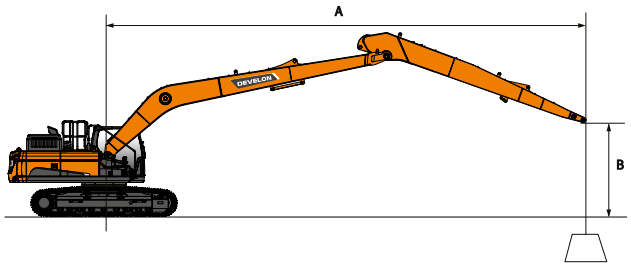

: Rating over front.
: Rating over side or 360°.

1. Lifting capacities are in compliance with ISO 10567:2007(E).
2. The load point is at the end of the arm.
3. * = The nominal loads are based on hydraulic capacity.
4. The nominal loads shown do not exceed 75% of tipping loads or 87% of hydraulic lifting capacity.
5. For lifting capacity with bucket, simply subtract the actual weight of the bucket from the values.
6. The configurations indicated do not necessarily reflect the standard equipment of the machine.

STANDARD AND OPTIONAL EQUIPMENT

● Standard ○ Optional

Engine

- ● DX225LC-7 SLR: Develon DL06V, Stage V compliant, SCR, DOC and DPF post treatment, water-cooled diesel engine with wastegate turbocharger and air-to-air intercooler
- ● DX300LC-7 SLR: Develon DL08V, Stage V compliant, SCR, DOC and DPF post treatment, water-cooled diesel engine with variable turbocharger and air-to-air intercooler
- ● DX530LC-7 Semi-SLR & SLR: Scania DC13, Stage V compliant, SCR, DOC and DPF post treatment, water-cooled diesel engine with wastegate turbocharger and air-to-air intercooler
- ● Auto-idle function
- ● Auto shut-off

Hydraulic system

- ● Boom and arm flow regeneration
- ● Swing anti-rebound valves
- ● Spare ports (valve)
- ● 1-touch power boost function
- ● Smart Power Control (SPC)
- ● Cylinder cushioning & contamination seals
- ○ Hydraulic piping for tilting buckets

Cab & Interior

- ● Pressurized, sound-insulated and CabSus mounted cab
- ● Heated, adjustable air suspension seat with adjustable headrest and armrest
- ● Air conditioning with climate control
- ● Pull-up type front window with sun roller blind and removable lower front window
- ● Sliding left window
- ● Intermittent upper and lower windshield wiper
- ● Rain visor
- ● Rear window defroster switch
- ● Adjustable PPC wrist control levers for arm, boom, bucket and swing
- ● Joysticks and pedals provide proportional control of auxiliary lines for attachments
- ● Travel pedals and hand levers
- ● Jog shuttle switch
- ● DEVELON Smart Touch – 8" touch screen, all-in-one
- ● Attachment management system
- ● Engine speed (RPM) control dial
- ● Automatic travel speed (slow / fast)
- ● 4 operating modes & 4 working modes
- ● Electric horn
- ● Cigarette lighter
- ● Ceiling light
- ● Cup holder
- ● Multiple storage compartments (e.g. document holder under seat)
- ● Storage area (tools, etc.)
- ● Heating and cooling lunch box
- ● Flat, spacious, easy-to-clean floor
- ● Master key
- ● Anti-theft protection (from control panel)
- ● 12 V spare power socket
- ● Serial communication port for laptop PC interface
- ● Remote radio ON/OFF switch
- ● Loudspeakers and connections for radio

Safety

- ● DX225LC-7 SLR, DX300LC-7 SLR: Roll Over Protective Structure (ROPS)
- ● FOGS cab - top and front cab guards (ISO 10262)
- ● Boom and arm cylinder safety valves
- ● Overload warning device
- ● Large guard rails on upper structure and steps
- ● Rotating beacon
- ● Rear-view camera
- ● Punched metal anti-slip plates
- ● Hydraulic safety lock lever
- ● Safety glass
- ● Hammer for emergency escape
- ● Right and left rear-view mirrors
- ● Lockable fuel cap and covers
- ● Battery cut-off switch
- ● Engine restart prevention system
- ● Parking brake
- ● Work lights (2 front frame, 4 front cab-mounted, 2 rear cab-mounted, 2 boom-mounted and 1 rear side)
- ● Emergency engine stop switch and hydraulic pump control switch
- ● DX225LC-7 SLR: Rear and side-view camera
- ● DX300LC-7 SLR, DX530LC-7 SLR & Semi-SLR: Around View Camera 360°
- ○ DX225LC-7 SLR: Around View Camera 360°

Other

- ● DX225LC-7 SRL: 8500 mm boom – 6200 mm arm – 5300 kg counterweight
- ● DX300LC-7 SRL: 10000 mm boom – 7000 mm arm – 6300 kg counterweight
- ● DX530LC-7 Semi-SLR: 9000 mm boom – 6000 mm arm – 11100 kg counterweight
- ● DX530LC-7 SLR: 11000 mm boom – 8000 mm arm – 11100 kg counterweight
- ● DEVELON Fleet Management Web (telematic system)
- ● Auto shut-off fuel filler pump
- ● Double element air cleaner and pre-filtered Cyclone Turbo dust separator
- ● Fuel pre-filter with water separator sensor
- ● Dust screen for radiator/oil cooler
- ● Self-diagnostic function
- ● Hydrostatic 2-speed travel system with automatic shift
- ● Remote greasing for swing circle and work group pivot points

Undercarriage

- ● Hydraulic track adjuster
- ● Normal track guards
- ● Greased and sealed track links
- ● DX225LC-7 SLR: 800 mm shoes
- ● DX300LC-7 SLR: 800 mm shoes
- ● DX530LC-7 Semi-SLR & SLR: 600 mm shoes
- ○ DX225LC-7 SLR: 900 mm shoes
- ○ DX530LC-7 Semi SLR & SLR: 800 mm shoes

Powered by **Innovation**

DISCOVER MORE:
DX225LC-7 SLR

DX300LC-7 SLR

DX530LC-7 SLR

DEVELON

DOOSAN Infracore Europe s.r.o.
IBC - Pobřežní 620/3, 186 00 Praha 8-Karlín
Czech Republic

©2023 DEVELON D4600752-EN (05-23)

Certain specification(s) are based on engineering calculations and are not actual measurements. Specification(s) are provided for comparison purposes only and are subject to change without notice.
Specification(s) for your individual Develon equipment will vary based on normal variations in design, manufacturing, operating conditions, and other factors. Pictures of Develon units may show other than standard equipment.