Mini Excavator

DX25Z-7

Operating weight	2 691 kg
Bucket capacity	0.07 m^3



DEVELON

DEVELON

Continuous Evolution for the Better.

We trace our roots back to 1937 as one of Korea's first large-scale machine plants. Since then, we have consistently delivered earthmoving equipment to build critical infrastructure for the betterment of communities, societies, and the wider world.

We are Develon.

Develon is a bold name that reflects our core ambition to continue developing onwards and to make a positive mark on our world. Moving forward, we will continue providing innovative products and solutions that advance the world we live in today.



Power, Precision, and Performance—Packed into a Compact Footprint.

Meet the Develon DX25Z-7—a zero tail swing mini excavator made for tight spaces, with the strength and stability to match. Designed for operator comfort and control, it features advanced safety, easy maintenance, and the reliability to keep you moving, job after job.

Power That Doesn't Quit
- Kubota D1305 Stage V-compliant engine for reliable, long-lasting performance
- Compact zero tail swing design for tight spaces without sacrificing strength

Engineered for Safer Workdays
- Heavy-duty counterweight for stable, safe operation
- Smart anti-theft technology helps prevent unauthorized use

Built-In Reliability
- Cylinder guards protect critical components
- Safety valves and hose protection help prevent costly damage
- Robust design to withstand tough environments

Comfort for Every Shift
- Spacious cab with excellent visibility to reduce fatigue
- Clear 5-inch digital display for easy control
- Integrated modern audio system enhances operator comfort

Service Made Simple
- Smart engine layout for quick inspections and repairs
- Extended service intervals save time and reduce costs
- Wide-opening access panels for fast, easy maintenance

The Develon DX25Z-7 strikes the ideal balance between power and precision. Thanks to its true zero tail swing design, it operates confidently in the tightest spaces, with no rear overhang and no risk of damage to nearby obstacles. Whether you're working next to walls, in urban zones, or on crowded job sites, the DX25Z-7 delivers maximum maneuverability without compromising stability or control.

Versatility with Every Movement
Engineered for versatility, the DX25Z-7 offers an exceptional working range that enhances both productivity and flexibility. Its advanced hydraulics and robust engine deliver smooth, responsive control, giving operators the precision they need for fine grading or heavy lifting. Multiple dipper arm options allow you to customize your machine to match your tasks—maximizing efficiency whether you're digging deep or reaching far.

Advanced Hydraulics, Enhanced Control
Get the control and responsiveness you need with the DX25Z-7's high-efficiency hydraulic system. Standard two-way auxiliary piping lets you quickly switch between single and double-acting modes, while optional quick coupler piping makes attachment changes smooth and simple. For added precision, rotating piping and joystick-controlled flow enable fine-tuned control, helping you tackle a variety of tasks with ease.

Effortless Transportability
With a low weight of just 2 691 kg, our DX25Z-7 excavator is easy to transport on a small trailer along with a quick hitch, breaker, and three buckets—staying within legal weight limits for hassle-free mobility.



Compact. Powerful. Ready for Anything.



Built for Safety, Backed by Confidence

The Develon DX25Z-7 is built to keep you safe, stable, and in full control, no matter the challenge. From a reinforced structure and intelligent anti-theft systems to class-leading safety certifications, every feature is designed to support secure, worry-free operation. Whether you're working on busy urban sites or uneven terrain, this machine gives you the protection and stability you need to focus on the task at hand.

Confidence on Every Surface
A cast counterweight gives the DX25Z-7 a low center of gravity for stable, confident operation in any environment. An optional additional counterweight further enhances balance — ideal when using heavier attachments or working on uneven terrain. The result? Rock-solid performance, even in the toughest conditions.

More Control, Less Risk
The DX25Z-7 integrates intelligent safety systems to help protect both the operator and the machine. An overload warning system alerts you if lifting limits are exceeded, while a manually activated safety lever and emergency cut-off switch provide added protection during operation.

Certified to Keep You Safe
From top to bottom, the DX25Z-7 is built with your safety in mind. The cabin structure meets ROPS/TOPS/FOPS certifications, providing industry-standard protection from rollovers, tipping, and falling objects. Additional safeguards include a travel alarm, emergency engine stop switch, safety belt warning system, and bright work lights with a beacon for better visibility.

Guard Your Investment
The DX25Z-7 includes a Smart Anti-Theft System featuring a password-protected ignition key—adding a crucial layer of defense against unauthorized use. It's a simple yet effective way to safeguard your machine and your peace of mind, especially when operating in unsecured or remote locations.

Dependability You Can Build On

When the job demands consistency, the Develon DX25Z-7 delivers. With a design rooted in durability and premium components chosen for their proven performance, this excavator is built to keep working, day after day, task after task. From its rugged construction to its efficient systems, every element is crafted to reduce downtime and extend the life of your machine, giving operators and fleet managers alike peace of mind on the jobsite.

Proven Power, Day After Day
At the heart of the DX25Z-7 is a vertical Kubota engine known for its consistent performance and fuel efficiency. Designed to handle heavy workloads while minimizing fuel consumption, this engine offers the best of both power and practicality. Its low maintenance needs and strong reputation for reliability mean fewer interruptions, so you can stay focused on the job.

Protection Where it Counts
The DX25Z-7 is equipped with a built-in safety valve system that helps safeguard critical components against pressure overload. By automatically regulating hydraulic pressure, these valves prevent damage to hoses and attachments, extending the life of your equipment and reducing the risk of costly repairs. It's just one more way Develon helps you stay productive and protected.

Built-In Defense Against Downtime
Durability meets smart design with the DX25Z-7's reinforced cylinder guards. These heavy-duty components shield the boom, arm, and bucket cylinders from jobsite impacts, while strategically routed hoses reduce exposure to wear and tear. The result is a more resilient machine with less risk of damage, keeping your operations running smoothly.

Advanced Filtration
High-performance fuel and water separators reduce impurities, preventing fuel system failures.

Pin & Bushing Technology
Self-lubricating coatings and ultra-hard wear-resistant materials increase component lifespan and reduce maintenance.

Built Around the Operator

Long days on the job demand more than just performance: they require comfort, visibility, and control. That's why the Develon DX25Z-7 is equipped with a newly designed cabin that prioritizes operator experience. From improved ergonomics and intuitive displays to outstanding visibility, everything is built to help you stay focused, safe, and productive—no matter how tough the task.

From Controls to Connectivity
Inside the DX25Z-7's spacious cabin, you'll find a range of modern features designed to enhance your comfort and convenience. The MP3 radio with USB ports and hands-free calling options keeps you connected and entertained throughout the day. A full-color 5-inch digital display puts essential machine data and controls at your fingertips, and with an IP68 waterproof rating, it's ready to perform even in harsh conditions. Thoughtful layout and ergonomic design help reduce fatigue, so you can stay comfortable and focused during long operating hours.

See the Site. Own the Task.
Clear visibility means better safety and sharper performance—and the DX25Z-7 delivers both. With large windows and a well-placed cab design, you get a wide, unobstructed view of your surroundings. This improved sightline enhances jobsite awareness and makes precision tasks easier, reducing the risk of accidents and boosting your confidence behind the controls. When you can see more, you can work smarter.

Reliable Performance You Can Trust

The Develon DX25Z-7 is designed to keep your focus on the job, not on maintenance. Built with reliability at its core, this machine features a smart engine layout and durable components that reduce the need for frequent service. Long service intervals and quality parts ensure consistent performance, while advanced protective systems guard against wear and unexpected failures. It's a machine you can count on—day in, day out.

Maintenance Made Simple
The DX25Z-7 is built with easy servicing in mind, helping you minimize downtime and keep maintenance straightforward. A no-tool hood and wide-access panels make it quick and hassle-free to reach major components—so you spend less time on routine checks and more time on the job.

Easy Access for Faster Maintenance
The DX25Z-7 is designed to make servicing simple. A no-tool hood and wide-access panels allow you to reach major components quickly. Key engine components are also grouped under a single hood, so routine checks and top-ups are easy and efficient.

More Uptime, Less Downtime
With extended service intervals and a layout built for convenience, the DX25Z-7 helps you stick to a cost-effective maintenance schedule while keeping your machine in top shape. Less time in the shop means more time on the job—exactly where your machine belongs.

My Develon › Management on the Jobsite › Work Efficiency Management › Preventive Management › Proactive Service



Monitor Your Equipment From Anywhere

To compete and succeed, your equipment must maximize jobsite productivity and profitability. Develon machines do both. To ensure a high return on investment, we include more premium features as standard on every model—features that other manufacturers often offer only as costly upgrades. By making them standard, Develon gives you a competitive edge, helping operators work more efficiently and enhancing safety during long days in the field.

Telematics Terminal
A terminal device is installed and connected to a machine to capture machine data.

Telecommunication
Develon offers dual-mode communication (mobile and satellite) for maximum coverage.

My Develon
Stay informed with My Develon — the digital platform that consolidates all equipment information and digital services in one place for quick and easy access.

Operation Hours	Total operating hours and hours by model
Fuel Efficiency*	Fuel levels and consumption
Reports & Location	Operation report and utilization, GPS, and geofencing
Warnings & Alerts	Detect machine warnings, antenna disconnections, and geo/time fence breaches
Filter & Oil Management	Preventive maintenance through scheduled part replacements

**Functions may not be applied to all models. Please contact your sales representative for more information on this feature.*

Attachments

Selecting the right attachment for an excavator is crucial for maximum performance and efficiency.



Grading buckets

Also known as a cleaning or maintenance bucket, the Develon grading bucket is built for smooth finishes and everyday versatility. Its wide, sleek design makes it ideal for grading, ditching, and clearing out debris for better drainage.



Digging buckets

Develon digging buckets are all-purpose tools designed for bulk digging and excavating in most ground conditions.



Hydraulic breakers

Essential for efficiently breaking through rock, hydraulic breakers facilitate faster and more precise excavation.



Quick couplers

Develon quick couplers are known for their reliability, performance, and easy service, thanks to their simple yet effective design.

DEVELON

Technical specifications

DX25Z-7



Performance

Designed to deliver superior performance and fuel efficiency, the Kubota D1305 diesel engine fully meets the latest Stage V emission regulations. To optimize machine performance, the engine uses high-pressure fuel injectors, natural aspiration, and electronic engine controls. 4-Cycle Water-Cooled, with EGR.

Manufacturer	Kubota
Model	KUBOTA D1305
Number of cylinders	3
Rated power gross	24.8 (18.5) hp (kW)
Rated power, net	24.4 (18.2) hp (kW)
Max. torque, net	81.4 Nm
Displacement	1.261 l
Bore and stroke	78 × 88 mm
Starter	12V-1.4 kW
Alternator	12V-40 A
Air cleaner	Double elements
Swing (crossover relief)	170 kgf/cm²
Swing speed	9.16 rpm
Bucket breakout force (ISO)	2.141 t
Arm tearout force (ISO)	1.325 t

Undercarriage

Extremely robust construction throughout – made of high-quality, durable materials, with all welded structures designed to limit stresses.

- Track rollers lubricated for life
- Idlers and sprockets fitted with floating seals
- Track shoes made of induction-hardened alloy with triple grouser
- Heat-treated connecting pins
- Hydraulic track adjuster with shock-absorbing tension mechanism

Rubber track width	250 mm
Ground pressure	0.32 kgf/cm²

Swing Mechanism

The swing mechanism uses an axial piston motor, driving a 2-stage planetary reduction gear bathed in oil for maximum torque.

- Swing bearing: single-row, shear type ball bearing with induction hardened internal gear
- Internal gear and pinion immersed in lubricant

Hydraulic System

The e-EPOS (Electronic Power Optimising System) is the brain of the excavator – minimising fuel consumption and optimizing the efficiency of the hydraulic system for all working conditions. To harmonize the operation of the engine and the hydraulics, the e-EPOS is connected to the engine's electronic control unit (ECU) via a data transfer link.

- 2 travel speeds offer either increased torque or high speed
- Cross-sensing pump system for fuel savings
- Auto-deceleration system
- 3 operating modes
- Flow and pressure control of auxiliary hydraulic circuits from control panel

Main pump type	Variable displacement tandem axis piston pumps
Main pump	2 × 28.2 l/min @ 2 350 rpm
Pilot pump (gear design)	20/10.5 l/min
Aux. line (2 way)	48 l/min

Drive

Each track is driven by an independent, high-torque axial piston motor through a planetary reduction gearbox. Two levers / foot pedals guarantee smooth travel with counter-rotation on demand. The track frame protects the travel motor, brake and planetary gears. The multi-disc track brakes are spring-applied and hydraulic released.

Travel speed (low – high)	2.38 / 4.35 km/h
Maximum traction	2.266 t
Maximum gradeability	35° / 70%

Cab

The heating system is carefully designed to keep the cab comfortable in any condition. Pressurized, filtered air flows evenly through multiple vents, providing fresh air throughout the space. The operator's seat is fully adjustable and equipped with a seat belt for added safety. Plus, the seat and joystick console can be adjusted independently, letting the operator tailor their workspace for optimal comfort and efficiency.

Sound level	94 dB(A)
Cabin sound level	78 dB(A)

Refill Capacities

Fuel tank	30 l
Cooling system (radiator capacity)	6.9 l
Engine oil	5.7 l
Travel device	0.6 l
Hydraulic tank	27 l

Component Weights

Item	Unit	Weight	Remarks
Base machine	kg	20 800	With boom cylinder incl. counterweight
Counterweight	kg	6 450	
Front assembly	kg	4 540	
Piping & covers	kg	1 069	incl. arm bucket and tilt cylinders
Total weight	kg	25 689	

Dimensions

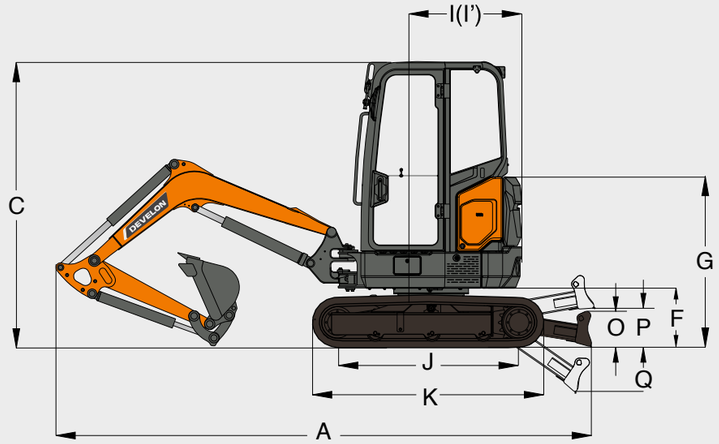

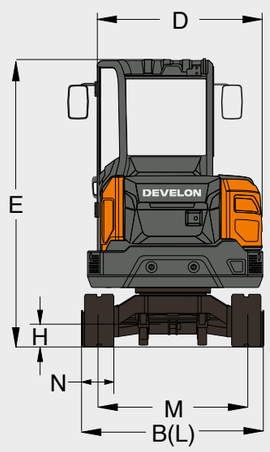

Classification		Unit	1.3 m arm
	Operating weight	kg	2 691
	Bucket capacity (SAE heaped), standard	m^3	0.07
A	Overall length	mm	4 170
B	Overall width	mm	1 550
C	Overall height	mm	2 452
D	Overall width of upperstructure	mm	1 490
E	Overall height of cab	mm	2 452
F	Ground clearance of counterweight	mm	504
G	Overall height of engine hood	mm	1 522
H	Minimum ground clearance	mm	183
I	Rear-end swing radius (add. CW)	mm	775 (875)
J	Distance between tumblers	mm	1 550
K	Undercarriage length	mm	1 975
L	Undercarriage width	mm	1 550
M	Track gauge	mm	1 250
N	Track shoe width, standard	mm	250
O	Blade height	mm	300
P	Ground clearance of blade up	mm	328
Q	Blade depth	mm	348

Working Range

Classification		Unit	1.3 m arm
A	Max digging reach	mm	4 725
A'	Max digging reach on ground	mm	4 600
B	Max digging depth	mm	2 695
B'	Max digging depth (8 ft level)	mm	2 230
C	Max vertical wall digging depth	mm	2 200
D	Max digging height	mm	4 290
E	Max dumping height	mm	2 975
F	Min swing radius	mm	2 100
	Boom swing radius (left/right)	mm	70° / 50°

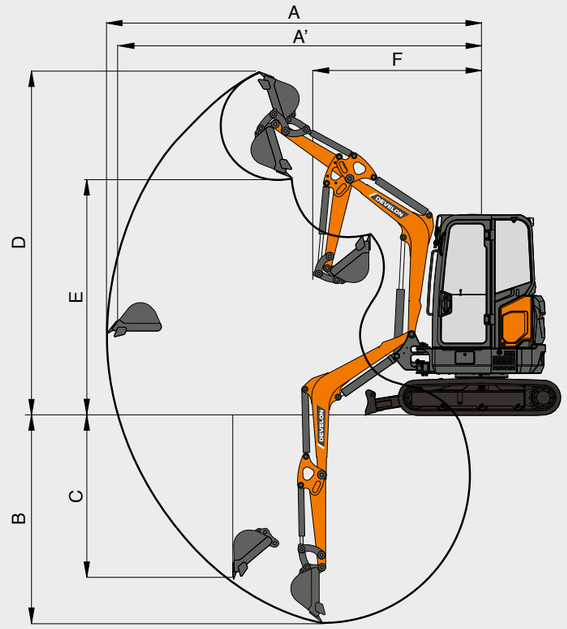

Standard & Optional Equipment

Standard

- Kubota D1305 engine, Stage V compliant
- 1–2-way high-flow auxiliary line with pedal control
- Fixed undercarriage
- 250 mm rubber tracks
- 1.3 m arm
- 2 030 m boom
- ROPS / TOPS / FOPS-certified cabin
- Anti-theft protection system
- Safety belt
- Overload Warning System
- Battery cut-off switch
- Rotating beacon
- Front LED light
- Boom-mounted LED lights
- Bucket, boom, and arm cylinder guards
- Zero House Swing (ZHS) upper structure
- 4-pillar canopy
- 5" digital display
- Radio with Bluetooth (cab version only)
- USB charger and 12V power socket
- My Develon (telematics system)

Optional

- 1–2-way high flow auxiliary line with thumb-wheel control
- Quick coupler piping
- Rotating piping
- Travel alarm
- Heated cab

Lifting Capacities

Cabine · W/O Bucket

Unit: 1 000 Kg

A	1 m		1.5 m		2 m		2.5 m		3 m		3.5 m		4 m		Max. reach (m)		
B																	A

Blade Up · Boom 2.03 m · Arm 1.3 m · Shoe 250 mm · Counterweight 130 kg

3.5 m															610	470	2 85
3 m									560	440					460	360	3 35
2.5 m									560	440	430	340			390	310	3 68
2 m									550	430	420	330			350	270	3 89
1.5 m					1 05	790	720	550	530	410	420	320	330	260	330	260	4 02
1 m							690	520	520	400	410	310	330	250	320	250	4 06
0.5 m					940	690	660	500	500	380	400	310	320	250	320	250	4 02
0 m					930	680	650	490	490	370	390	300			330	260	3 90
-0.5 m	1 040*	1 040*	1 280*	1 12	930	680	640	480	490	370	390	300			360	280	3 69
-1 m	1 500*	1 500*	1 65	1 13	930	680	640	480	490	370					420	320	3 36
-1.5 m	2 090*	2 090*	1 68	1 16	950	700	650	490							530	410	2 87
-2 m					740*	730									740*	730	2 00

Blade Down · Boom 2.03 m · Arm 1.3 m · Shoe 250 mm · Counterweight 130 kg

3.5 m															670*	510	2 85
3 m									600*	480					600*	390	3 35
2.5 m									610*	470	640*	360			570*	330	3 68
2 m									680*	460	670*	360			560*	300	3 89
1.5 m					1 230*	860	930*	600	790*	450	720*	350	610*	280	570*	280	4 02
1 m							1 170*	570	920*	430	790*	340	710*	280	590*	270	4 06
0.5 m					1 350*	760	1 340*	540	1 020*	420	850*	330	700*	270	640*	270	4 02
0 m					1 580*	740	1 430*	530	1 080*	410	880*	330			720*	280	3 90
-0.5 m	1 040*	1 040*	1 280*	1 24	2 000*	740	1 420*	520	1 080*	400	860*	320			780*	300	3 69
-1 m	1 500*	1 500*	1 880*	1 26	1 810*	750	1 310*	530	1 000*	400					800*	350	3 36
-1.5 m	2 090*	2 090*	2 190*	1 28	1 460*	760	1 060*	540							810*	440	2 87
-2 m					740*	740*									740*	740*	2 00

Blade Up · Boom 2.03 m · Arm 1.3 m · Shoe 250 mm · Counterweight 130 kg · Counterweight add 140 kg

3.5 m															670*	540	2 85
3 m									600*	510					530	420	3 35
2.5 m									610*	500	490	390			450	360	3 68
2 m									630	490	490	390			410	320	3 89
1.5 m					1 19	900	820	640	610	480	480	380	390	300	380	300	4 02
1 m							780	610	590	460	470	370	380	300	370	290	4 06
0.5 m					1 08	810	760	580	580	450	460	360	380	290	370	290	4 02
0 m					1 07	790	740	570	570	440	450	350			390	300	3 90
-0.5 m	1 040*	1 040*	1 280*	1 280*	1 07	790	740	560	560	430	450	350			420	330	3 69
-1 m	1 500*	1 500*	1 880*	1 32	1 07	800	740	570	560	440					480	370	3 36
-1.5 m	2 090*	2 090*	1 91	1 34	1 09	810	750	580							610	480	2 87
-2 m					740*	740*									740*	740*	2 00

Blade Down · Boom 2.03 m · Arm 1.3 m · Shoe 250 mm · Counterweight 130 kg · Counterweight add 140 kg

3.5 m															670*	580	2 85
3 m									600*	540					600*	450	3 35
2.5 m									610*	540	640*	420			570*	380	3 68
2 m									680*	530	670*	410			560*	340	3 89
1.5 m					1 230*	980	930*	680	790*	520	720*	410	610*	330	570*	320	4 02
1 m							1 170*	650	920*	500	790*	400	710*	320	590*	310	4 06
0.5 m					1 350*	880	1 340*	630	1 020*	480	850*	390	700*	320	640*	320	4 02
0 m					1 580*	860	1 430*	620	1 080*	470	880*	380			720*	330	3 90
-0.5 m	1 040 *	1 040 *	1 280 *	1 280*	2 000*	860	1 420*	610	1 080*	470	860*	380			780*	350	3 69
-1 m	1 500*	1 500*	1 880*	1 45	1 810*	870	1 310*	610	1 000*	470					800*	400	3 36
-1.5 m	2 090*	2 090*	2 190*	1 47	1 460*	880	1 060*	620							810*	510	2 87
-2 m					740*	740*									740*	740*	2 00

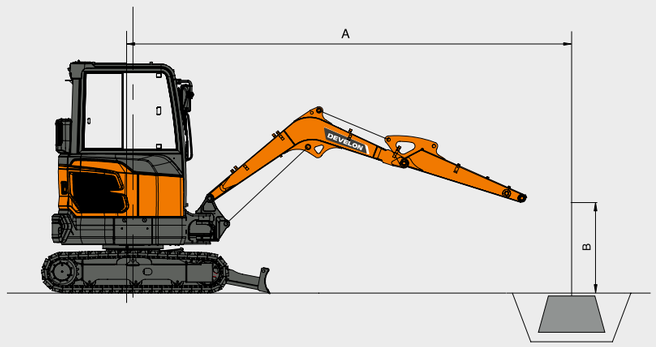

Canopy · W/O Bucket

Unit: 1 000 Kg

A	1 m		1.5 m		2 m		2.5 m		3 m		3.5 m		4 m		Max. reach (m)		
B																	A

Blade Up · Boom 2.03 m · Arm 1.3 m · Shoe 250 mm · Counterweight 130 kg

3.5 m															580	450	2.85
3.0 m									530	420					440	340	3.35
2.5 m									530	420	410	320			370	290	3.68
2.0 m									520	410	400	310			330	260	3.89
1.5 m					1 000	750	680	530	500	390	390	310	310	240	310	240	4.02
1.0 m							650	500	490	380	380	300	310	240	300	230	4.06
0.5 m					890	650	620	470	470	360	370	290	300	230	300	230	4.02
0.0 m					880	640	610	460	460	350	370	280			310	240	3.90
-0.5 m	1 040*	1 040*	1 280*	1 060	870	640	600	450	460	350	360	280			340	260	3.69
-1.0 m	1 500*	1 500*	1 560	1 070	880	650	610	460	460	350					390	300	3.36
-1.5 m	2 090*	2 090*	1 580	1 100	890	660	620	470							500	380	2.87
-2.0 m					740*	690									740*	690	2.00

Blade Down · Boom 2.03 m · Arm 1.3 m · Shoe 250 mm · Counterweight 130 kg

3.5 m															670*	490	2.85
3.0 m									600*	450					600*	370	3.35
2.5 m									610*	450	640*	340			570*	310	3.68
2.0 m									680*	440	670*	340			560*	280	3.89
1.5 m					1 230*	820	930*	570	790*	420	720*	330	610*	260	570*	260	4.02
1.0 m							1 170*	540	920*	410	790*	320	710*	260	590*	250	4.06
0.5 m					1 350*	720	1 340*	510	1 020*	390	850*	310	700*	250	640*	250	4.02
0.0 m					1 580*	700	1 430*	500	1 080*	380	880*	310			720*	260	3.90
-0.5 m	1 040*	1 040*	1 280*	1 080	2 000*	700	1 420*	490	1 080*	380	860*	300			780*	280	3.69
-1.0 m	1 500*	1 500*	1 880*	1 190	1 810*	710	1 310*	500	1 000*	380					800*	320	3.36
-1.5 m	2 090*	2 090*	2 190*	1 210	1 460*	720	1 060*	510							810*	420	2.87
-2.0 m					740*	740*									740*	740*	2.00

Blade Up · Boom 2.03 m · Arm 1.3 m · Shoe 250 mm · Counterweight 130 kg · Counterweight add. 140 kg

3.5 m															660	520	2.85
3.0 m									600*	480					500	400	3.35
2.5 m									610	480	470	370			430	340	3.68
2.0 m									600	470	460	370			390	310	3.89
1.5 m					1 140	860	780	610	580	460	450	360	370	290	360	290	4.02
1.0 m							750	580	560	440	440	350	360	280	350	280	4.06
0.5 m					1 030	770	720	550	550	430	440	340	360	280	350	280	4.02
0.0 m					1 010	760	710	540	540	420	430	340			370	290	3.90
-0.5 m	1 040*	1 040*	1 280*	1 240	1 010	750	700	540	530	410	430	330			400	310	3.69
-1.0 m	1 500*	1 500*	1 790	1 250	1 020	760	700	540	530	410					450	360	3.36
-1.5 m	2 090*	2 090*	1 820	1 280	1 030	770	710	550							580	450	2.87
-2.0 m					740*	740*									740*	740*	2.00

Blade Down · Boom 2.03 m · Arm 1.3 m · Shoe 250 mm · Counterweight 130 kg · Counterweight add. 140 kg

3.5 m															670*	560	2.85
3.0 m									600*	520					600*	430	3.35
2.5 m									610*	520	640*	400			570*	360	3.68
2.0 m									680*	510	670*	390			560*	330	3.89
1.5 m					1 230*	930	930*	650	790*	490	720*	390	610*	310	570*	310	4.02
1.0 m							1 170*	620	920*	470	790*	380	710*	310	590*	300	4.06
0.5 m					1 350*	830	1 340*	600	1 020*	460	850*	370	700*	300	640*	300	4.02
0.0 m					1 580*	820	1 430*	590	1 080*	450	880*	360			720*	310	3.90
-0.5 m	1 040*	1 040*	1 280*	1 280*	2 000*	820	1 420*	580	1 080*	450	860*	360			780*	330	3.69
-1.0 m	1 500*	1 500*	1 880*	1 380	1 810*	830	1 310*	580	1 000*	450					800*	380	3.36
-1.5 m	2 090*	2 090*	2 190*	1 400	1 460*	840	1 060*	590							810*	490	2.87
-2.0 m					740*	740*									740*	740*	2.00

= Rating over front
= Rating over side or 360°

1. Load point is the end of the arm.
2. Capacities marked with an asterisk (*) are limited by hydraulic capacities.
3. Lift capacities shown do not exceed 75 % of minimun tipping loads or 87 % of hydraulic capacities.
4. The least stable position is over the side.
5. Lift capacities apply only to the machine as originally manufactured and normally equipped by the manufacturer.
6. Lift capacities are in compliance with ISO 10567.

**Some of these options may be standard in some markets. Some of these options may not be available for certain markets. Please check with your local Develon dealer for more information about availability or to adapt your machine to your application needs.*



Develon Warranty

Your Key to Equipment Protection and Peace of Mind

Keep your heavy construction equipment protected with Develon. Our comprehensive warranties and premium protection plans give you peace of mind, ensuring your investment stays safe and valuable for the road ahead.

Tailored Warranty Plans
Choose from a range of affordable protection plans, designed exclusively for Develon customers through our authorized dealers. These plans transform your machine's price into a strategic investment, not just an expense.

Develon Premium Protection
Opt for Develon Premium to experience unmatched security, reliability, and overall value. This top-tier plan shields your equipment from unexpected costs and minimizes downtime, letting you focus on what matters – getting the job done.

Act Now!
Get in touch with a Develon authorized dealer today to protect your equipment investment. With an easy process and lasting benefits, Develon helps keep your heavy construction equipment in top condition.

Choose Develon Extended Warranty: Play it Safe and Secure Your Investment.

**Offer may vary based on model.*

Powered by **Innovation**

DEVELON

Space for dealer's stamp

HD Hyundai Infracore Europe s.r.o.
IBC – Pobrezni 620/3,
18600 Praha 8 – Karlin, Czechia

©2025 HD Hyundai Infracore. All rights reserved.

Certain specifications are based on engineering calculations and are not actual measurements. Specifications are provided for comparison purposes only and are subject to change without notice. Specifications for your individual Develon equipment will vary based on normal variations in design, manufacturing, operating conditions, and other factors. Pictures of Develon units may show equipment other than standard equipment.