7 series

Material Handlers

DX230WMH-7 | DX250WMH-7



DEVELON

Waste nothing gain everything

Build for challenging scarp and solid waste, recycling and other bulk material handling. Develon material handlers offer a powerful combination of performance, efficiency, durability and comfort. With one of the most comfortable material handlers on the market, you'll move more material every day.

Comfort
- Automotive-style heat and air conditioning
- LCD display panel
- Sound-isolating cab seal

Configuration
- Straight boom and gooseneck arm
- Straight boom and straight arm
- Wheel undercarriage

Maximum visibility
- Cab risers
- Standard rearview camera

Durability
- Machine guarding
- D-channel frame design
- Automatic belt tensioner

Advanced capabilities
- Lift work mode
- Fast cycle times
- Develon Fleet Management

Sub-heading

Made for scarp, solid waste, recyclables and other bulk materials, Develon material handlers offer powerful hydraulic forses with high horsepower and torque to move mountains of material. Powerful arm forces allow you to quickly, precisely tackle more cubic feet of material each day.

Lifting capacity
Lift more with each cycle and complete the job faster. Develon material handlers are designed to maximize lifting capability. With an optional loading reach, loading height and lift position, you can lift and place material with total confidence.

Straight boom and gooseneck arm
Our customer can select between Straight and Gooseneck Arm. The first one enables to install and control various tools while the Gooseneck Arm gives enhanced access to containers, trucks, and railcars.

Arm forces
Superior hydraulics deliver power to the arm and bucket for lifting and loading heavy material.

More horsepower
Optimized horsepower gives you better performance for tough application and heavy objects.

Swing torque
Develon models have strong and productive swing torque that allows the material handler to swing heavy loads quickly, even uphill.

Lift work mode
Set a lift work mode that provides increased pump torgue, low engine rpm and an automatic power boost to optimaze work group performance for maximum productivity.

Wheel undercarriage
For jobsites requiring more mobility and maneuverability, the wheel undercarriage on the DX230WMH-7 and DX250WMH-7 makes every corner of your jobsite more accessible. An Ergonomic steering wheel makes it simple and intuitive to control machine movement.



Powerful to move more

Front and rear stabilizers
Stabilizers widen the machine's footprint, providing support that maximizes lift capacity and productivity.

Rear fixed axles
The rear axle is fixed for excellent controllability and easy maintenance. The transmission is mounted to the rear axle for optimal ground clearance and protection from obstacles.

One-touch power boost
A convenient button on the right-hand joystick provides momentary increased hydraulic power for use on difficult loads that can slow other machines down.

Powerful to move more

Selectable power modes

Selectable power modes give you more control over your material handler's performance. Manage the balance of fuel consumption and machine power to your prederence and customize performance to the task.







Power+
Delivers the fastest work group speeds to save more time when loading trucks, railcars and containers.

Power
Provides excellent power and superior performance for heavy lifting. It also provides quick truck loading and fast travel speed to save time.

Standard
Optimizes your fuel consumption and delivers high performance for lifting.

Economy
Reduces fuel consumption for low-demand applications and slows down machine movement, which is handy for tight-fitting areas that require extra precision.



Efficient with every move

Each Develon material handler delivers fast cycle times, productivity and help you maximize operator productivity to help you more more in less time.

Efficient fuel management
- Choice of 4 power models (Eco – Standard – Power – Power Plus) and automatic Smart Power Control system for optimal power and reduced ful consumtion is suitable in all conditions.
- New traveling more, using the flow of the 2 hydraulic pumps, to reduce the engine rpm and fuel consumption.

Variable pressure turbocharger
Provides optimal air flow to the engine combustion chamber under all speed and load conditions, so that exhaust gas is cleaner and fuel economy is improved.

SPC3 (3rd generation of smart power control)
To improve fuel efficiency and reduce emissions, the SPC3 reduces engine speed and adjust pump torque automatically, according to work conditions.

Auto shutdown*
When auto shutdown is enabled, operations can configure the idle time before the material handler shuts down automatically – from three to 60 minutes - to save valuable fuel for more productive operation.

Auto idle*
The standard auto idle feature autmatically idles your engine when machine functions are not used for four seconds. This reduces noise, improves jobsite communications and saves fuel. When you move the controls, the material handler automatically returns to your previous throttle setting.

*Auto shutdown and auto idle are disabled with generators installed.

Efficient with every move

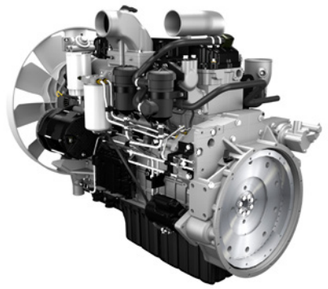

The power to raise productivity

- The DX230WMH-7 and DX250WMH-7 are equipped with the latest generation Develon engine.
- Stage V comliant, this engine boasts extremely low emissions because reducing our enviromental impact is paramount to us.
- Exhaust gases are purified by Selective Catalytic Reduction (SCR) tehnology, a Diesel Oxidation Catalyst (DOC) and a Diesel Particulate Filter (DPF).

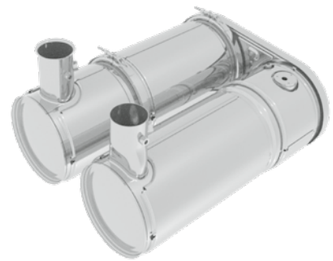

After treatment system

Diesel Oxidation Catalyst (DOC)
In the DOC, carbon monoxide (CO) and particulate matter (PM) emissions are transformed into harmless water (H_2O) and carbon dioxide (CO_2).

Selective Catalytic Reduction (SCR)
In the SCR canister, nitrogen oxides mix with ammonia and a chemical reaction takes place, resulting in nitrogen (N) and water vapor

Diesel Exhaust Fluid (DEF)
DEF is a solution of pure urea and deionized water. A minimum level of DEF is required for proper machine operation, and the DEF supply tank is heated for proper operation in cold weather. DEF is available from you Develon dealer in various container sizes.

Designed for performance

— Long-term
— All-round
— Heavy-duty

Strengthened boom and arm
During the development of Develon machines, we use intensive testing to calculate the best load distribution throughout the boom structure. Combined with thicker material, this means that element fatigue is limited and both reliability and component life are increased. To better protect the base of the arm, reinforced bars have been added and the arm center and end boss have been strengthened.

Advanced filtration
- Fuel filters and water separator: a filter-type high-performance water separtor effectively captures moisture in the fuel, reducing impurities and helping minimize any fuel-related issues. Pre-filters and dual main filters as standard achieve a high degree of purity that minimizes fuel system failures.
- Cyclonic air pre-cleaner: air filter life and engine efficiency are directly related to the amount of debris ingested through the engine's air intake. Therefore, a cyclonic air pre-cleaner (as standard) is the first stage of an air intake system that prevents the majority of heavier-then-air particles from entering. Self-cleaning and maintenance-free, the system is able to expel all types of mixed debris, including mud, snow, rain, leaves, sawdust, chaff, etc.

Pin and bushing advanced technology
Highly lubricated metal is used for the boom pivot to increase the component's lifetime and lengthen greasing intervals. The bucket pivot features EM (Enhanced Macrosurface) bushings. These have a tailored surface pattern and self-lubricating coating for optimized greasing and more efficient debris removal.

Ultra-hard wear-resistant discs and bucket pivot polymer shims increase durability even more.

Advanced disc brake system
The new improved system allows a more efficient braking of the machine. This eliminates the rocking effect associated with working on wheels. The ZF axles are designed for low maintenance, and the oil change intervals have been increased to 2 000 hours, further reducing owning and operational costs.

Heavy-duty axles
The front axle offers wide oscillating and steering angles. The transmission is mounted directly on the rear axle for protection and optimum ground clearance.

Undercarriage durability
A rigid, welded frame provides excellent durability. Efficient routing of hydraulic lines, transmission and read differential protection and heavy-duty axles make the undercarriage prefect for wheeled excavator applications. An oscillating axle lock is available for dig ging and lifting operations.

New drive line concept
- The new travel motor and powershift transmission control in the drive line provide comfortable travel due to increased smoothness, improved hydaraulic retarding and improved gear shifting.
- A new travel mode, using the flow of 2 pumps, automatically adjusts the required engine power and rpm to avoid lost energy and provide the best fuel consumption.

Designed for performance

— Long-term
— All-round
— Heavy-duty



Exclusive independent stabilizer design

1. Large reinforced covers protect the stabilizer cylinders.
2. The stabilizers are kept well within the machine envelope and the position of the pins is kept high to avoid bumping while moving over the ground.
3. Parts in contact with the ground have been carefully designed to prevent damage to the surface
4. Wide pads to reduce ground pressure

Comfort at every turn

From great visibility to a deluxe, adjustable seat, Develon cabins are easy to enter and exit, and include a long list of standard features to bring superior comfort to any job.

Hydraulic elevating cab
With increased hydraulically controlled variable cab height, you can set your vantage point for an optimal view of your attachment and work area.

Comfortable cab
The spacious FOPS/ROPS cab is fully equipped with comfort features that include heating and air conditioning with adjustable airflow and five operating modes. The standard reclining, height-and weight-adjustable seat (with headrest, adjustable armrest and seat belt) offers excellent lumbar support. Heated seat sets the comfort standard even higher. The pressurized cab keeps the operator environment cleaner, too.

Visibility
The cab has large front and side windows and narrow corner pillars with small window joints, plus a pillar-mounted wiper. An overhead window enhances your ability to see when loading trucks or working overhead, and a rearview camera improves visibility in back. Sunshades on the front and top windows shield the operator's eyes for improved visibilty to the work area.

Adjustable comfort
The standard air suspension seat has multiple adjustment points, allowing you to select the most comfortable position. The seat and control stand move with the suspension, maximizing comfort in all working conditions.

Quiet operation
A complete, sound-isolating seal reduces the noise inside the cabin to an extremely low level. The compartmentalized components reduce noise output outside the cab. Even the cabin frame and seat are designed to absorb vibration to significantly increase operator comfort.

Other cabin features
- Improved floor space for your feet and increased cab space for your legs, arms and head.
- 180-degree swinging door
- Wide entry/exit area
- Grab handles and punched panel steps
- Standard radio and whip antenna (CD player and MP3 player input optional)
- 12V power port
- Adjustable side window openings

Lighting options
Optional lighting includes four LED working lights in front and two LED working lights in back to provide plentiful light before sunrise or after sunset.

Easy-to-read LCD display panel
An easy-to-read, easy-to-reach LCD panel enables monitoring of critical machine data, such as coolant temperature, fluid levels, warnings and the rearview camera display. The display switches to a night view during low-light operation.

Automotive-style heat and air conditioning
High-capacity heating and cooling vents, and an easy-to-control temperature keep your comfortable in every season. Automatic temperature con-trol senses and adjusts to the temperature setting auto-matically. A memory function returns it to your preferred temperature if you shut the machine off and restart later.

Simple controls
All Develon material hand-lers include ergonomic, propo-rtional joystick-control levers and foot pedals.

Standard Rearview Camera
A rearview camera provides the operator with an additional means of viewing machine surroundings for enhanced productivity. An optional side camera is available, and both cameras can be viewed at once on the LCD panel.

Take a seat in Business class

The ergonomic controls, the easy-to-view color monitor, and Develon Smart Touch place the machine firmly in your hands.



1. Parallel wiper
2. 360 degree all-around view camera (AVM) (optional)
3. Develon Smart Touch
4. Propotional switch
5. Joystick 1-touch function button
6. Breaker/Booster button
7. Redesigned pedals
8. Flat, spacious, easy-to-clean floor
9. Joysticks and switches are integrated in adjustable control consoles
10. Heated and cooled (option) seat
11. Improved visibility on the bottom right
12. Separate seat height adjustment lever and cushion tilting function
13. Fully adjustable steering column



Comfortable driving, powerful performance

Best-in-class operator enviroment
The DX210WMH-7 is designed to provide you with the best possible working conditions. The sophisticated state-of-the-art ROPS cab is pressurized and ISO-certified for your safety. A high-quality heated seat (and even seat cooling available as an option) with air suspension provides maximum operator comfort. Make the most of the spacious and comfortable cab by tilting the redesigned, adjustable steering wheel column forward when not in use.

Unrivalled comfort
Comfortably seated, you benefit from a clear all-round view of the worksite and have easy access to several storage compartments. Noise and vibration levels are remarkably low, while air conditioning and automatic climate control allow you to keep working for hours on end without feeling tired. Pedals, joysticks and armrests ahve all been designed for operator comfort and efficiency.

Cab suspension
The cab's suspension system (CabSus mount) dampens vibrations and provides outstanding protextion against impact. This system absorbs shocks and vibrations much more effectively than a conventional silentblock suspension system.

Develon Smart Touch
The wide 8" Develon Smart Touch screen provides easy scrolling though the different menus, including power settings and auxiliary hydraulics settings. It also allows you to connect a Bluetooth device or listen to your favorite radio station.





1. Develon Smart Key
2. Engine speed control dial
3. Travel speed selector switch
4. Fine swing button
5. Boom LIS button
6. Light button
7. Cab lamp button
8. Overload warning device button
9. Auto hold button
10. Joystick steering button
11. Working lamp button
12. Mirror heater button (not for EU)
13. Travel alarm button

Maintain peak productivity with minimal effort

Develon simplifies material handler care with onboard diagnostic systems, easy component access and a standard fleet management system.



Easy component access
Access panels are easy to find and open from the top, bottom and sides of the material handler. A large engine bonnet provides plenty of room to reach the top of the engine, while a hingled belly pan allows access from the bottom. Solid steel side panels provide access to regular daily maintenance items, which makes for quick, easy service and a lower cost of operation.

Auxiliry mode switch
An auxiliary mode switch allows you to finish a task in progress or move your material handler to a more convenient location for service, if needed.

Color-coded, labeled wiring
Wiring in the machine is labeled for easy service, fast troubleshooting and simple installation of electronic, accessories – like the rotating beacon.

Centralized arm and boom grease points
Daily maintenance is critical – and it's simple with the centralized grease banks on the arm and base of the boom.

Emergency stop switch
The relocated emergency stop switch is easy to access from the machine's exterior.

Develon monitoring system with dealer laptop access
The Develon monitoring system is a diagnostic program that gives your dealer's technician a direct communications link with your material handler. During operation, it monitors all critical data and provides a complete history of operation and a real-time log of machine failures. Armed with information like this, your dealer service personnel can fix issues fast – and you can get back to work.



Self-diagnostics
The LCD monitor helps you monitor critical systems in real time. Plus, you can access historical machine alerts right from the screen in the cabin.

Oil and filter life
Easily review the hours since the last maintenance for oils and filters. Ten hours before service is due, the machine will remind you when oils and filters need replacing, which helps ensure regular maintenance scheduling.

Features very by models. See models specifications for details at https://eu.Develon-ce.com/en/products/special-application-machines

Manage a variety of materials and tasks

For the best possible performance, Develon material handlers offer a variety of features that make attachment operation easy, intuitive and productive.

Attachment management
Via the LCD screen, the operator can configure different attachment presets to limit the maximum pressure and the minimum/maximum flow rate delivered to the attachment.

Password protection functionality
within the system prevents improper attachment preset selection for operators with limited understanding of hydraulic systems.

Rotating grapple-ready
The Develon material handler is ready to work with a rotating grapple attachment. There are no additional hydraulics to install or add as an expensive option.

Grapple attachment
Build for maximum power and reliability in harsh material-handling applications, the Develon grapple rotates 360 degrees and has four hydraulic tines to grab and hold tightly to large, irregularly shaped loads.

- Includes lift eye for an underslung magnet.
- Slew drive motor includes internal reliefs, hose kit and mount.
- Replaceable tine tips simplify maintenance.





Generator and magnet
To increase versatility for ferrous metal sorting and loading, choose the 15kW generator set, available as a factory- or dealer-installed option. An optional deep-field magnet set is also available, and it can be slung under the grapple or connected directly to the arm.

Develon Fleet Management > Management on the job site > Work efficiency management > Preventive management > Proactive service



Monitor your equipment from anywhere

Develon Fleet Management is a powerful equipment diagnostic tool that monitors the health, location and productivity of your Develon equipment from a user-friendly mobile app and website. It offers free monitoring with no contract and no fees.

Telematics terminal
Terminal device is installed and connected to a machine to capture machine data.

Telecommunication
Develon provides dual-mode (Mobile, Satelite) communication to maximize communication coverage.

Develon Fleet Management WEB
Users can monitor machine status from Develon Fleet Management Web.

Operation trend	Total operation hours and operation hours by mode.
Fuel efficiency*	Fuel level and fuel consumption.
Reports & location	Operation report & utilization. GSP and geo-fence.
Warning & alert	Detect machine warnings, antenna disconnection, and geo/time fence.
Filter & oil management	Preventive maintenance by item replacement cycle.

Functions may not be applied to all models. Please, contact your sales representative for more information on this feature.



Attachments

The Develon grapple attachment is designed to handle challlending scrap and recycling tasks to help you move more material quickly. Build to Develon machine specifications, it matches your material handler's load ratings and hydraulics for the best possible performance.

Sorting grapple



- Unlimited 360 degree rotation: allow the operator to rotate the grapple for perfect alighnment or placement.
- Tines are made from high strenght & abrasion resistant steel for a long time.
- All hydraulic parts are protected.
- Tine tips are replaceable.
- Adjustable closing force to protect structure are cylinders.

Orange peel grapple

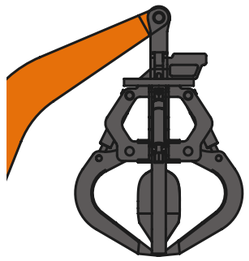

- Unlimited 360 degree rotation: allows the operator to rotate the grapple for perfect alignment or placement.
- Independent hydraulic lines on the excavator provide the ability to independently control the rotation and open/close functions.
- Long life design: hydraulics are fully protected (enclosed) and Hardox makes it durable
- Easy maintenance: bolt-on blades

For more information on Develon attachments, read The Attachment catalogue.

DEVELON

Technical specifications

DX230WMH-7
DX250WMH-7





Engine

Designed to deliver superior performance and fuel efficiency, the Develon DL06V diesel engine fully meets the latest Stage V emission regulations. To optimize machine performance, the engine uses high-pressure fuel injectors, air-to-air inter-cooler and electronic engine contols. 4-Cycle Water-Cooled, Wastegate Turbocharged, Diesel Oxidation Catalyst (DOC), Selective Cataytic Reduction (SCR) and Diesel Particulate Filter (DPF).

Model	Develon DL06V
Number of cylinders	6
Rated power at 1 900 rpm	SAE J1995 (189 HP) SAE J1349 (186 HP)
Maximum torque at 1 400 rpm	82 kgf-m
Displacement	5 890 cm³
Bore and stroke	100 mm x 125 mm
Starter	24 V/ 6 kW
Batteries – Alternator	2 x 24 V, 150 Ah - 24 V, 100 A
Idle (low – high)	800 (10) – 2 000 (25) rpm
Air filter	Double element air cleaner and pre-filtered Cyclone Turbo dust separator

Undercarriage

Extremely robust construction throughout – made of high-quality durable materials with all weled structures designed to limit stresses. Lateral chassis welded and rigidly attached to undercarriage. Heat-treated connecting pins. Heavy-duty front axle with automatic or operator-controlled (on/off/auto) front axle oscillation lock.

Tire dimensions	10-20 16 PR
Overall width (standard axle/ wide axle)	2 750 mm
Wheel base	2 850 mm
Tread width (standard axle/ wide axle)	2 114 mm
Oscillation angle	-8

Brakes

Dual multi-disc circuit with sintered metal discs for extended service life. Breaking system activated by a pump and accumulator circuits. Automatic brakes for standard, released when pressing the transmission pedal. Spring-applied hydraulically released parking brake mounted on the transmisssion shaft.

Accumulators	0.75 l - 3 MPa

Hydraulic system

The e-EPOS (Electronic Power Optimising System) is the brain of the excavator – minimissing fuel consumption and optimizing the efficiency of the hydraulic system for all working conditions. To harmonize the operation of the engine and the hydraulics, the e-EPOS is connected to the engine's electronic control unit (ECU) via a data transfer link.

Maximum system pressure (Work)	35 MPa
Maximum system pressure (Travel)	37 MPa

Pumps	Type	Max. flow at 2000 rpm	Relief valve pressure
Main	2× parallel bent-axis axial piston	2× 236 l/min	35 MPa
Pilot	Gear	27.4 l/min	4 MPa
Steering	Gear	69 l/min	18 MPa
Brake	Gear	22.4 l/min	15.4 MPa

Hydraulic Cylinders

High-strength steel piston rods and cylinder bodies. Shock-absorbing machanism fitted in all cylinders for shock-free operation and extended piston life.

Cylinders	Quantity	Bore × rod diameter × stronke (mm)
One-piece boom	2	120 × 85 × 1 240
Arm	2	115 × 80 × 1 068
Attachment	1	120 × 80 × 1 060
Stabilizers	2 / 4	130 × 80 × 391

Fluid capacities

High-strength steel piston rods and cylinder bodies. Shock-absorbing machanism fitted in all cylinders for shock-free operation and extended piston life.

Fuel tank	351 l
Cooling system	30.7 l
AdBlue (DEF) tank	31.5 l
Hydraulic oil tank	192 l
Engine oil	27 l
Swing device	5 l

Cab

The air-conditioning and heating systems are integrated for optimal climate control. An automatically-controlled fan supplies the pressurized and filtered cab air, which is distributed throughout the cab from mulitple vents. The heated air suspension, adjustable operator's seat includes a seat belt. The operator can adjust the ergonomic seat and joystick console separately according to his preferences.

A-weighted emission sound pressure level at the operator's position, LpAd (ISO 6396:2008)	Declared: 71 dB (A) Measured: 70 dB (A)
A-weighted sound power level, LwAd (2000/14/EC)	Declared: 102 dB (A) Measured: 101 dB (A)

Swing Mechanism

The swing mechanism uses an axial piston motor, driving a 2-stage planetary reduction geat bathed in oil for maximum torque.

- Swing bearing: single-row, shear type ball bearing with induction hardened internal gear
- Internal gear and pinion immersed in lubricant
- Increased swing torque reduces swing time
- The swing brake for parking is activated by spring and released hydraulically

Maximum swing speed	9.8 rpm
Maximum swing torque	6387 kgf-m

Drive

The wheels are driven by a bent axial piston engine via a 2-speed powershift transmission. In addition to the 2-speed powershift transmission there is also an economy mode and a switch for the creep speed. A button makes it possible to pass from high to low in work mode. Two travel speed ranges offer a choice between increased torque or high speed.

Travel speed (creep/low/economy/high)	4 / 9 / 33 / 34 km/h
Gradeability	70% (35 degrees)
Maximum traction force	12 t
Minimum turning radius	7.2 m

Component Weights

Item	Unit	DX230WMH-7	DX250WMH-7	Remarks
Upper structure without front	kg	10 850	12 065	With counterweight
Undercarriage	kg	7 600	7 600	
Front assembly	kg	3 300	4010	
Counterweight	kg	4 000	5 200	
Gooseneck / Straight	kg	2 110 / 2 120	2 250 / 2 275	Including bushing
Arm - Gooseneck	kg	1 190	1 230	Including bushing
Arm - Straight	kg	1 480	1 480	Including bushing
Hydraulic elevating cab	kg	2 000	2 000	
Stabilizer	kg	1 221	1 221	
Stabillizer cylinder (each)	kg	113	113	
Additional counter weight	kg	N/A	1 200	

Dimensions

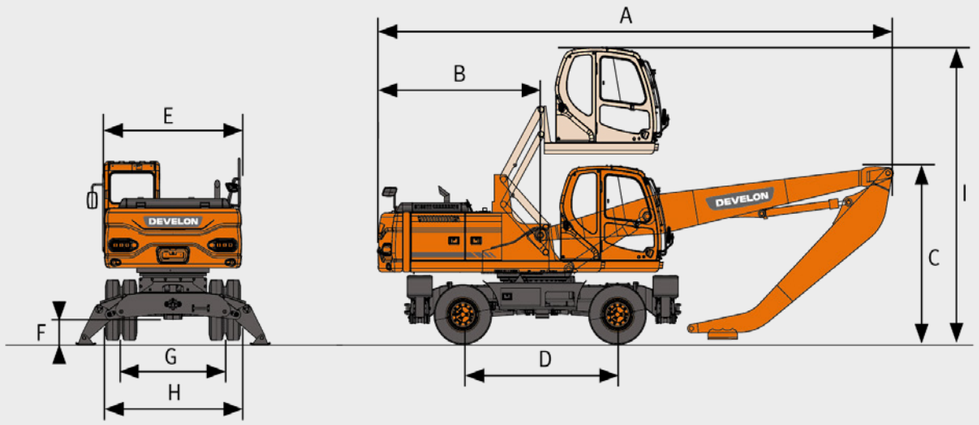

	Unit	DX230WMH-7	DX230WMH-7	DX250WMH-7	DX250WMH-7
Boom length	mm	6 100	6 100	6 500	6 500
Arm length	mm	4 200 Gooseneck	4 000 Straight	4 500 Gooseneck	4 000 Straight
A shipping length	mm	9 400	9 300	9 740	9 760
B Tail swing radius	mm	2 780	2 780	2 860	2 860
C Shipping heigh (boom)	mm	3 100	3 170	3 170	3 170
D Wheel base	mm	2 850	2 850	2 850	2 850
E Upper housing width	mm	2700	2 700	2 700	2 700
F Ground clearance	mm	350	350	350	350
G Tread width	mm	2 1114	2 114	2114	2114
H Shipping width	mm	2 750	2 750	2 750	2 750
I Height over cab	mm	5 640	5 640	5 640	5 640

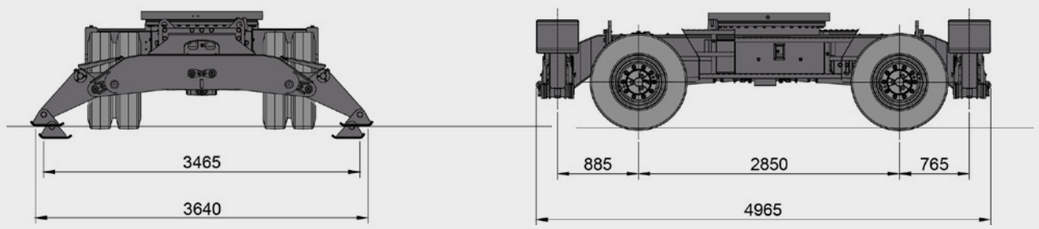

Working range

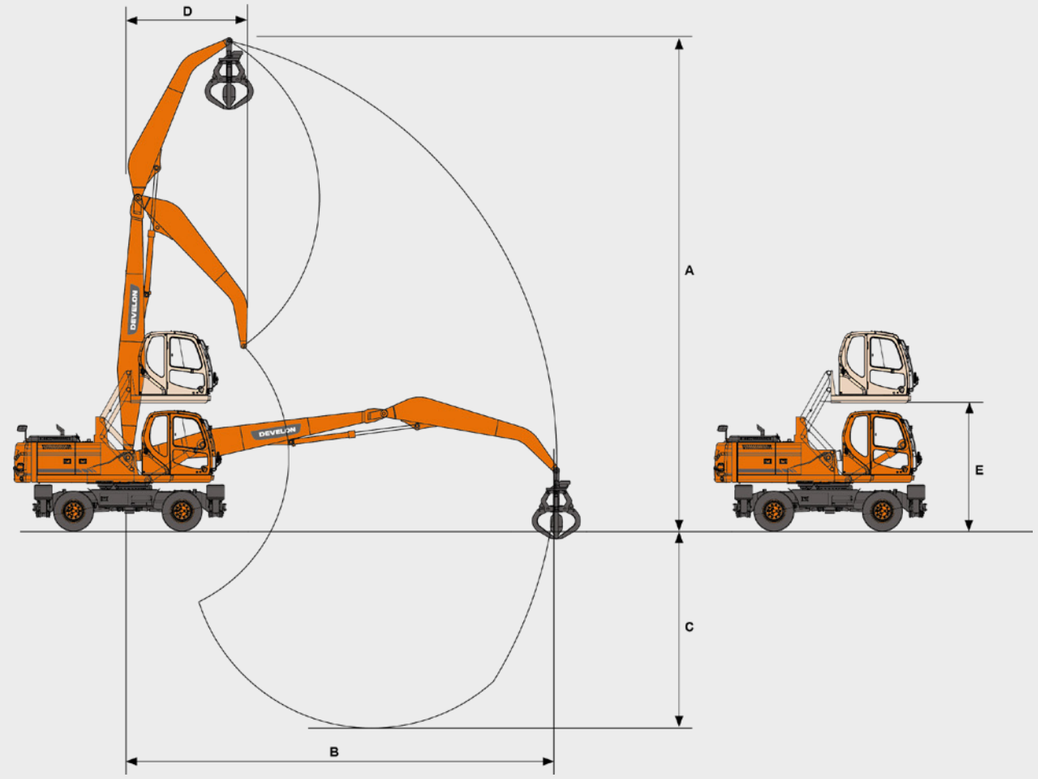

		Unit	DX230WMH-7	DX230WMH-7	DX250WMH-7
Boom length	mm	6 100	6 100	6 500	6 500
Arm length	mm	4 200 Gooseneck	4 000 Straight	4 500 Gooseneck	4 000 Straight
A Max. bucket pin height	mm	11 400	11 600	12 100	11 675
B Max. working reach	mm	10 045	10 090	10 700	10 400
C Max. working depth	mm	4 300	4 000	4 700	4 100
D Min. swing radius	mm	2 700	2 700	2 700	2 700
E Elevating height	mm	2 500	2 500	2 500	2 500

Lifting capaties WMH

W/O bucket · Chassis frame attachment: F-stabilizer + R-stabilizer down

Unit: kg

A	3,0 m		4,5 m		6,0 m		7,5 m		9,0 m	
B										

DX230WMH-7 · Boom 6,1 m · Gooseneck arm 4-2 m · Counterweight 4,0 t

10,5 m			7 360*	7 360*						
9,0 m					6 220*	6 220*				
7,5 m					6 100*	6 100*	5 510*	5 510*		
6,0 m			7 360*	7 360*	6 310*	6 310*	5 560*	5 560*	4 960*	4 510
4,5 m	11 240*	11 240*	8 370*	8 370*	6 780*	6 780*	5 760*	5 760*	4 980*	4 470
3,0 m			9 660*	9 660*	7 350*	7 350*	5 990*	5 770	5 030*	4 380
1,5 m			10 560*	10 560*	7 750*	7 750*	6 130*	5 600	4 980*	4 290
0,0 m	5 810*	5 810*	10 480*	10 480*	7 730*	7 750*	6 010*	5 460	4 720*	4 220
-1,5 m	5 810*	6 870*	9 410*	9 410*	7 120*	7 120*	5 490*	5 390	4 080*	4 080*
-3,0 m	8 110*	8 110*	7 480*	7 480*	5 850	5 850	4 390*	4 390*		

DX230WMH-7 · Boom 6,1 m · Straight arm 4,0 m · Counterweight 4,0 t

10,5 m			7 900*	7 900*						
9,0 m			7 060*	7 060*	6 200*	6 200*				
7,5 m			6 950*	6 950*	6 040*	6 040*	5 400*	5 400*		
6,0 m			7 410*	7 410*	6 240*	6 240*	5420*	5 420*	4 780*	4 270
4,5 m	11 660*	11 660*	8 410*	8 410*	6 690*	6 690*	5 600*	5 600*	4 780*	4 240
3,0 m			9 640*	9 640*	7 210*	7 210*	5 800*	5 550	4 790*	4 160
1,5 m			10 390*	10 390*	7 540*	7 540*	5 890*	5 380	4 700*	4 080
0,0 m			10 110*	10 110*	7 420*	7 330	5 700*	5 260	4 370*	4 020
-1,5 m	6 000*	6 000*	8 850*	8 850*	6 710*	6 710*	5 090*	5 090*	3 590*	3 590
-3,0 m			6 760*	6 760*	5 290*	5 290*	3 850*	3 850*		

DX250WMH-7 · Boom 6,5 m · Gooseneck arm 4,5 m · Counterweight 5,2 t

12,0 m										
10,5 m					5 860*	5 860*				
9,0 m					5 790*	5 790*	5 250*	5 250*		
7,5 m					5 780*	5 780*	5 170*	5 170*	4 690*	4 690*
6,0 m			7 160*	7 160*	6 060*	6 060*	5 280*	5 280*	4 690*	4 690*
4,5 m	11 220*	11 220*	8 180*	8 180*	6 550*	6 550*	5 510*	5 510*	4 760*	4 760*
3,0 m			9 440*	9 440	7 120*	7 120*	5 770*	5 770*	4 840*	4 790
1,5 m			10 290*	10 290*	7 520*	7 520*	5 930*	5 930*	4 840*	4 680
0,0 m	4 550*	4 550*	10 180*	10 180*	7 510*	7 510*	5 850*	5 850*	4 670*	4 590
- 1,5 m	5 600*	5 600*	9 190*	9 190*	6 990*	6 990*	5 440*	5 440*	4 220*	4 220*
-3 m	6 750*	6 750*	7 450*	7 450*	5 890*	5 890*	4 570*	4 570*	3 290*	3 290*
-4,5 m					4 130*	4 130*	3 040*	3 040*		

DX250WMH-7 · Boom 6,5 m · Straight arm 4,0 m · Counterweight 5,2 t

10,5 m			7 460*	7 460*						
9,0 m			6 930*	6 930*	5 950*	5 950*	5 310*	5 310*		
7,5 m			6 960*	6 960*	5 910*	5 910*	5 180*	5 180*		
6,0 m			7 510*	7 510*	6 160*	6 160*	5 260*	5 260*	4 580*	4 580*
4,5 m			8 510*	8 510*	6 610*	6 610*	5 450*	5 450*	4 610*	4 610*
3,0 m			9 620*	9 620*	7 090*	7 090*	5 640*	5 640*	4 640*	4 640*
1,5 m			10 110*	10 110*	7 330*	7 330*	5 700*	5 700*	4 560*	4 440*
0,0 m			9 590*	9 590*	7 130*	7 130	5 500*	5 500*	4 280*	4 280*
-1,5 m	5 030*	5 030*	8 240*	8 240*	6 380	6 380*	4 920*	4 920*	3 640*	3 640*
-3,0 m			6 240*	6 240*	5 050*	5 050*	3 830*	3 830*	2 320*	2 320*

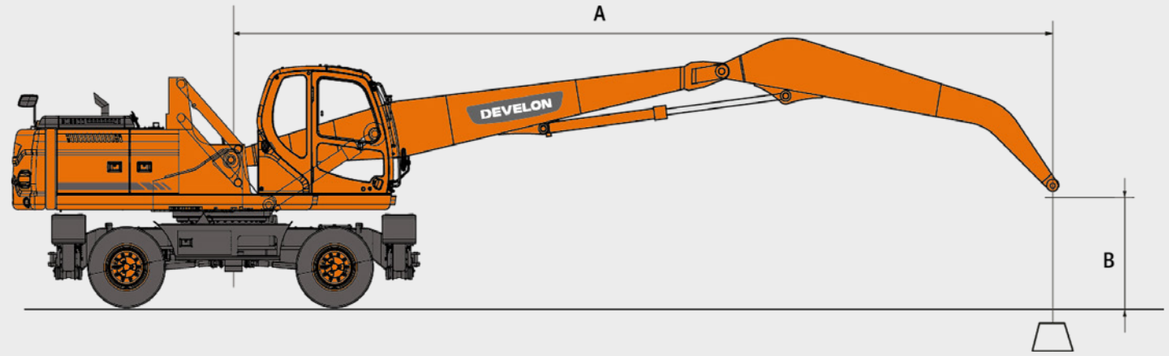

= Rating over front
= Rating over side or 360°

1. Lifting capacities are in compliance with ISO 10567:2007 (E).
2. The load point is at the end of the arm.
3. * – The nominal loads are based on hydraulic capacity.
4. The nominal loads shown do not exceed 75% of tipping loads or 87% of hydraulic lifting capacity.
5. For lifting capacity with bucket, simply subtract the actual weight of the bucket from the values.
6. The configurations indicated do not necessarily reflect the standard equipment of the machine.

Standard & Optional Equipment

Engine

Develon DL06V, Stage V compliant, SCR, DOC and DPF post treatment, water-cooled diesel engine with Wastergate Turbocharger and air-to-air intercooler	▪
Auto-idle function	▪
Auto shut off	▪
No EGR	▪

Hydraulic

Boom and arm flow regeneration	▪
Fine Swing more, on or off from cab	▪
Swing anti-rebound valves	▪
Smart Power Control (SPC3)	▪
Cylinder cushioning & contamination seals	▪
Hydraulic piping low flow for rotating or tilting tool (joystick control)	•
Hydraulic piping for quick-coupler	•
2 pumps travelling	•

Undercarriage

Double tires 10.00-20-16PR	▪
Front axle oscillation lock modes (On/Off/Auto)	▪
Piston rod protection of stabilizer cylinders	▪
Lockable tool box (left side)	▪
Rear & front chain tightening eyes	▪
Wide axle 2750 mm	▪
4 Independent stabilizers with cylinder protection	▪
Lockable tool box (right side)	•
Solid tire 10.00-20	•

Cab & interior

Pressurized sound-insulated and CabSus mounted cab	▪
Fully adjustable air suspension seat with heater	▪
Air conditioning with climate control	▪
Pull-up type front window sun roller blind and removable lower front window	▪
Sliding left window	▪
Intermittent upper and lower windshield parallel wiper	▪
Rain visor	▪
Rear window defroster switch	▪
Adjustable PPC wrist control levers for arm boom bucket and swing	▪
Joysticks & pedals provide proportional control of auxiliary hydraulic lines	▪
Adjustable tiltable steering column	▪
Pedal for auxiliary control 1 & 2 ways	▪
Job shuttle switch	▪
Develon Smart Touch – 8" touch screen, all-in-one	▪
Attachment management system	▪
Engine speed (RPM) control dial	▪
Automatic travel speed	▪
4 operating modes & 4 working modes	▪
Electric horn	▪
Cigarette lighter	▪
Ceiling light	▪
Cup holder	▪
Multiple storage compartments (e.g. document holder under seat)	▪
Storage area (tools etc.)	▪
Heating and cooling box	▪
Flat spacious easy-to-clean floor	▪
Keyless start (Develon Smart Key) & remote door lock/unlock	▪
Anti-theft protection	▪
12 V spare power socket	▪
Serial communication port for laptop PC interface	▪
Remote radio ON/OFF switch	▪
Loudspeakers and connections for radio	▪
Radio + MP3 (stereo) with Bluetooth streaming and handsfree call system	▪

Safety

Roll Over Protective Structure (ROPS)	▪
Boom and arm cylinder safety valves	▪
Overload warning device	▪
Large guard rails on upper structure and steps	▪
Rotating beacon	▪
Read and side view camera	▪
Punched metal anti-slip plates	▪
Hydraulic safety lock lever	▪
Safety glass	▪
Hammer for emergency escape	▪
Lockable fuel cap and covers	▪
Battery cut-off switch	▪
Engine restart prevention system	▪
Emergency engine stop switch and hydraulic pump control switch	▪
Parking brake	▪
Automatic digging brake	▪
LED Work lights 4 additional lamps (2 in front, 2 in the rear of the cab)	•
Front window upper and lower guards	•
FOGS cab - top and front cab guards (ISO 10262)	•
Right and left rear-view mirrors	▪

Other

DX230WMH-7: 6 100 mm boom – 4 200 mm arm – 4 000 kg counterweight	▪
DX250WMH-7: 6 500 mm boom – 4 500 mm arm – 5 200 kg counterweight	▪
'Develon Connect' Telematic system	▪
Auto shut-off fuel filler pump	▪
Double element air cleaner and pre-filtered Turbo dust separator	▪
Fuel pre-filter with water separator sensor	▪
Dust screen for radiator/oil cooler	▪
Self-diagnostic function	▪
Alternator (24 V, 80 A) – Battery (2 x 12 V, 150 Ah)	▪
Powershift 2-speed transmission + creep mode	▪
Remote greasing for swing circle and work group pivot points	▪
Guards for work lights	▪
Floating boom	▪
Air compressor	▪
Arm 4 000 mm straight	•
Grapples and magnet	•
Quick coupler piping for straight arm	•
Additional filter for breaker piping	•
Double pump flow	•
Alarm for travel & swing	•

Standard = ▪

Optional = •

Develon Warranty

Your key to equipment protection and peace on mind

Unlock unparalleled protection for your heavy construction equipment with Develon. Our robust warranties and premium protection plans ensure your investment is safeguarded and adds lasting value.

Tailored warranty plans
Choose from a range of affordable protection plans, designed exclusively for Develon customers through our authorized dealers. These plans turn your machine's price into a strategic investment, not just an expense.

Develon Premium: Premium protection
Opt for Develon Premium to experience unmatched security, reliability, and overall value. This top-tier plan shields your equipment from unexpected costs and minimizes downtime, letting you focus on what matters – getting the job done*.

Act now!
Contact our authorized Develon Dealers today and fortify your equipment investment. With a seamless process and lasting benefits, Develon ensures your heavy construction equipment remains in peak condition.

Choose Develon Extended Warranty: Play safe and secure your investments.

** Only for ADT, HEX and WLO.*
Offer may vary based on model.

Powered by **Innovation**

DEVELON

Space for dealer's stamp

DX230WMH-7

DX250WMH-7

HD Hyundai Infracore Europe s.r.o.
IBC – Pobrezni 620/3,
18600 Praha 8 – Karlin, Czechia

©2024 HD Hyundai Infracore. All rights reserved.

Certain specification(s) are based on engineering calculations and are not actual measurements. Specification(s) are provided for comparison purposes only and are subject to change without notice. Specification(s) for your individual Develon equipment will vary based on normal variations in design, manufacturing, operating conditions, and other factors. Pictures of Develon units may show other than standard equipment.