DEVELON

Crawler Excavators

DX235LCR-7



Maximum power	189 hp
Operating weight	24.3 t
Bucket capacity	0.92 m^3

DEVELON DX235LCR-7 CRAWLER EXCAVATOR:

MEET THE NEW GENERATION OF DEVELON MACHINES

Lift your business to the next level with the DX235LCR-7 Develon excavator.

The DX235LCR-7 offers the best equilibrium possible between reduced swing radius and stability. One of the shortest swing radiuses in the market with the stability of a conventional excavator.

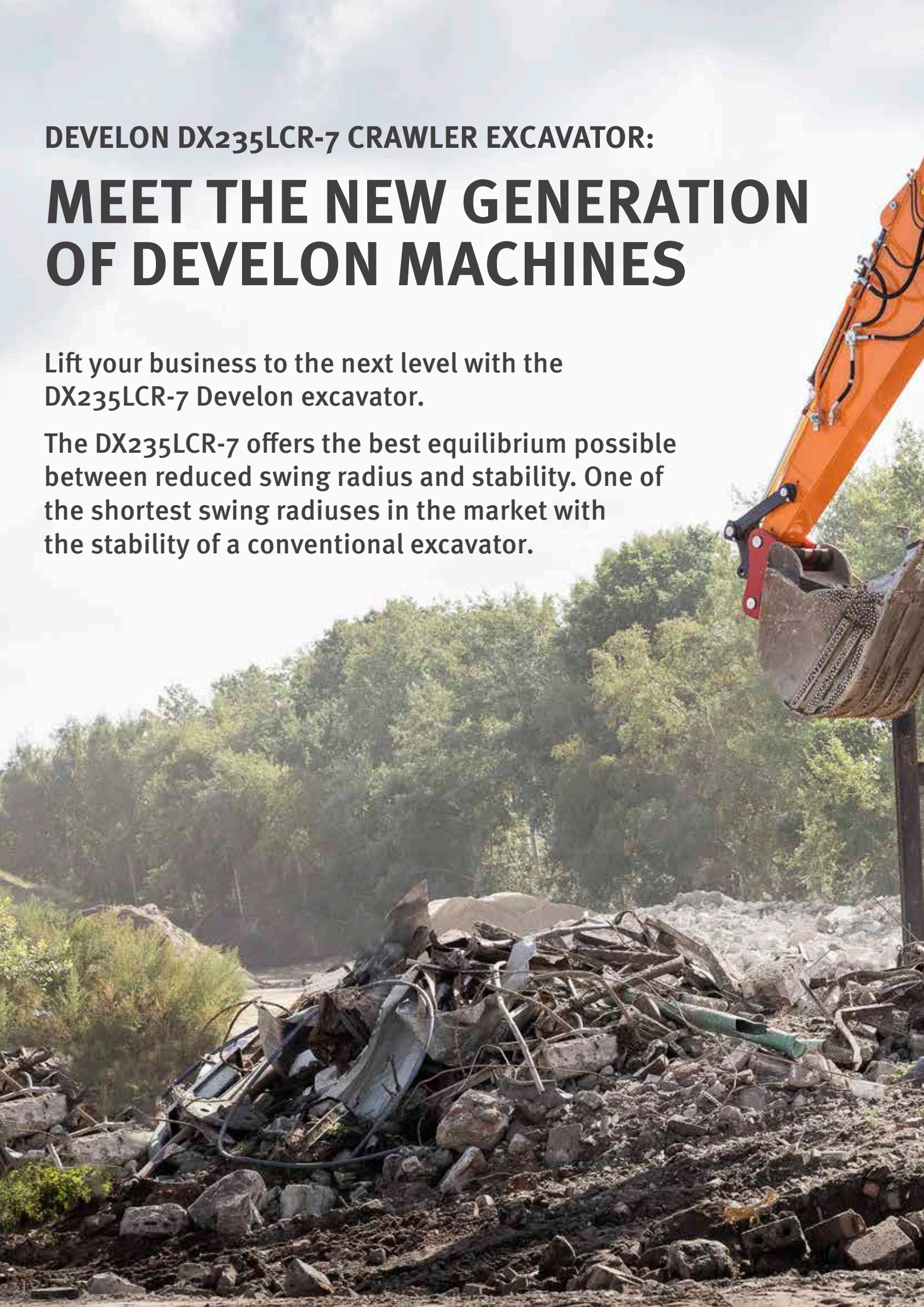


DEVELON
DX 235LCR

RAISE PROFITS, PRODUCTIVITY & FUEL EFFICIENCY

RELIABILITY

Reinforced castings and forged steel pivot points and reinforced heavy-duty arm and boom to withstand high-impact materials. Mono boom or articulated boom for added versatility. Improved hydraulic line routing to protect your investment.

VERSATILITY

A new attachment mode, with a priority valve on the attachment, results in higher working efficiency when moving the arm and using the attachment at the same time. A specific tiltrotator mode, for more precision and less back pressure when high flow is required.

YOUR SAFETY IS OUR PRIORITY

Rear and right side cameras as standard, anti-slip steps and platforms, as well as guard rails on upper structure.
Optional: a 360° all-around view camera (AVM) for maximum safety while working with people around.
Large side mirrors, 8 powerful LED work lights (4 additional lights possible as an option), travel alarm.

PRODUCTIVITY

State-of-the-art bucket and arm digging forces. Delivers higher productivity and reduced fuel consumption in an efficient and comfortable work environment.

UNRIVALLED COMFORT

One of the most spacious cabs in the market, with low noise & vibration levels and excellent all-round visibility. Thanks to the heating and even an optional cooling functionality of the premium seat and improved air ventilation in the DX235LCR-7, you can focus on the job at hand in any situation.





OPERATE AT EASE

New Develon Smart Touch screen, an easy to read and use 8" touch screen integrates all functions and settings of your machine in one place. Don't miss any important call thanks to the hands-free phone system. And forget fumbling with keyholes: unlock the door remotely, and start or stop the engine with the included Develon Smart Key.

ENGINE

Exceptionally powerful – with high torque at low revs – the new Develon engine combines reliability and low environmental impact. This Stage V compliant 6 cylinder engine delivers 141 kW at 1900 rpm.

FULL CONTROL OVER FUEL CONSUMPTION

The latest evolution of the legendary Stage V Develon DL06P engine achieves greater fuel savings thanks to the 3rd generation of Smart Power Control (SPC3). Take full control over your fuel consumption with the settable engine shut off.

ADVANCED FILTRATION

Highest efficiency filters & cleaners remove water, dust & particles to protect your investment optimally.

EASY MAINTENANCE

Maintenance data directly available from control panel. Easy access to all filters from ground level. Cooling compartment equipped with fine mesh for the intake air, to protect coolers and minimize downtime.


STAGE V
COMPLIANT
DEVELON



TOP PERFORMANCE AND FUEL EFFICIENCY

THE POWER TO RAISE PRODUCTIVITY

- The DX235LCR-7 is equipped with the latest generation Develon engine
- Stage V compliant, this engine boasts extremely low emissions because reducing our environmental impact is paramount to us
- Exhaust gases are purified by Selective Catalytic Reduction (SCR) technology, a Diesel Oxidation Catalyst (DOC) and a Diesel Particulate Filter (DPF) with no maintenance before 8000 hours

EFFICIENT FUEL MANAGEMENT

- Choice of 4 power modes (Eco - Standard - Power - Power Plus) and automatic Smart Power Control system for optimal power and reduced fuel consumption in all conditions
- Engine auto-shut-off: shuts down the engine after the machine has been idling for a specified time. The operator can set the delay before shut-off via the Develon Smart Touch screen

VARIABLE PRESSURE TURBOCHARGER

Provides optimal air flow to the engine combustion chamber under all speed and load conditions, so that exhaust gas is cleaner and fuel economy is improved.

SPC3 (SMART POWER CONTROL)

2 systems (Variable Speed Control and Pump Torque Control) work together to improve efficiency while maintaining productivity. The system reduces the engine speed and adjusts the pump torque according to work conditions.

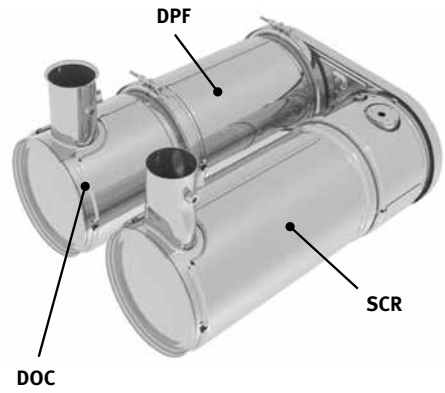



RELIABILITY – THE HABIT OF A LIFETIME

In your profession, you need equipment you can depend on. At Develon, we put durability and reliability at the core of our machines' development. Our materials and structures undergo stringent testing for strength and resilience under the most extreme conditions.

DESIGNED FOR LONG-TERM, ALL-ROUND, HEAVY-DUTY PERFORMANCE

EXTRA-STRONG X CHASSIS

Designed using finite element analysis and 3D computer simulation, the X shaped undercarriage ensures optimum structural integrity and durability.

UNDERCARRIAGE DURABILITY

- The chain is composed of sealed, self-lubricating links for long-term dependability.
- The track spring and idler are joined for long-lasting performance and easy maintenance
- Cast steel heavy-duty sprockets guarantee the highest resistance
- The track rollers are lubricated for life

STRENGTHENED BOOM AND ARM

During the development of our machines, we use intensive testing to calculate the best load distribution throughout the boom structure.
Combined with thicker material, this means that element fatigue is limited and both reliability and component life are increased.
To better protect the base of the arm, reinforced bars have been added and the arm center and end boss have been strengthened.

ADVANCED FILTRATION

- Fuel filters and water separator: a filter-type high-performance water separator effectively captures moisture in the fuel, reducing impurities and helping minimize any fuel-related issues. Pre-filters and dual main filters as standard achieve a high degree of purity that minimizes fuel system failures.

PIN AND BUSHING ADVANCED TECHNOLOGY

Highly lubricated metal is used for the boom pivot to increase the component's lifetime and lengthen greasing intervals. The bucket pivot features EM (Enhanced Macrosurface) bushings. These have a tailored surface pattern and self-lubricating coating for optimized greasing and more efficient debris removal. Ultra-hard wear-resistant discs and bucket pivot polymer shims increase durability even more.





1. Parallel wiper
2. Develon Smart Touch
3. Redesigned pedals
4. Flat, spacious, easy-to-clean floor
5. Proportional switch
6. Joystick 1-touch function button
7. Breaker/Booster button
8. Joysticks and switches are integrated in adjustable control consoles
9. Heated and cooled (option) seat
10. Develon Smart Key
11. Keyless start
12. Separate seat height adjustment lever and cushion tilting function



OPERATING IN HIGH COMFORT

BEST-IN-CLASS OPERATOR ENVIRONMENT

The DX235LCR-7 is designed to provide you with the best possible working conditions. The sophisticated state-of-the-art ROPS cab is pressurized and ISO-certified for your safety. A high-quality heated seat (and even seat cooling available as an option) with air suspension provides maximum operator comfort.

UNRIVALLED COMFORT

Comfortably seated, you benefit from a clear all-round view of the work site and have easy access to several storage compartments. Pedals, joysticks and armrests have all been designed for operator comfort and efficiency. Noise and vibration levels are remarkably low, and the effectiveness of the air conditioning and automatic climate control has been increased significantly. These features allow you to continue working for hours on end without feeling tired.
Finally, thanks to the hands-free system, you won't miss any important call, and you'll stay available to your customers, as you operate the machine.

CAB SUSPENSION

The cab's suspension system (CabSus mount) dampens vibrations and provides outstanding protection against impact. This system absorbs shocks and vibrations much more effectively than a conventional silentblock suspension system.

DEVELON SMART TOUCH

The wide 8" touchscreen provides easy scrolling through the different menus, including power settings and auxiliary hydraulics settings. It also allows you to connect a Bluetooth device or listen to your favorite radio station.

360° ALL-AROUND VIEW CAMERA (AVM) SYSTEM (OPTION)

The 360° all-around view camera (AVM) system gives you full view of the machine's surroundings.









TAKE A SEAT IN BUSINESS CLASS

The ergonomic controls, the easy-to-view color monitor, and Develon Smart Touch place the machine firmly in your hands.

TOTAL CONTROL IN ALL SIMPLICITY

DYNAMIC POWER MANAGEMENT

- Automatic travel speed range selection (slow/fast)
- Activating the power boost control system increases digging force by 10%
- A 1-touch deceleration button immediately reduces engine speed to low idle
- Auto-idling starts 4 seconds (adjustable) after all controls are returned to neutral – reducing fuel consumption and noise levels in the cab

NEW FINE SWING FUNCTION

Another new standard feature is the Fine Swing function. This function minimizes the shaking that a lifted object undergoes at the start or stop of the excavator's swing movement – increasing the safety of nearby workers and preventing damage caused by the object falling from the excavator. When Fine Swing activates, the overrun shuts off, allowing the DX235LCR-7 to smoothly reach maximum swing speed and removing the shock from the turn reversal at the moment of stopping – resulting in a smooth stop.

4 WORK MODES AND 4 POWER MODES

These modes deliver the needed power, according to your specific application, while minimizing fuel consumption:

- Work modes: 1-way mode, 2-way mode, Digging mode and Lifting mode
  With the 2-way mode, we now have a priority valve on the attachment line to increase the machine's productivity when using an attachment and moving the arm at the same time.
  A new mode is also available: dedicated for tilt rotator use, to maximize precision and minimize back pressure.
- Power modes: Power Plus mode, Power mode, Standard mode, Economy mode

EXPERT FINGERTIP CONTROL

- The new multi-function 8" Develon Smart Touch screen displays all useful information in a visual and intuitive format.
- At a glance, you can check the machine’s status and settings to achieve optimal efficiency.
- Develon’s unique jog shuttle switch gives you easy and precise control over all machine functions.
- Highly sensitive and low-effort joysticks enable you to work safely, smoothly and confidently.
- The proportional thumb switches on the joysticks can be mounted horizontally or vertically, as the operator prefers, for optimal control of hydraulic attachments.





SIMPLE MAINTENANCE FOR MAXIMUM UPTIME

MAINTENANCE ACCESS MADE SIMPLE

- Large guard rails are installed along with anti-slip steps and plates, for safer, easier access to the whole upper structure.
- The air conditioning filter is placed on the side of the cab for easy access. The filter's cover can be locked and opened with a key.
- A battery cut-off switch makes it easy to disconnect the battery for long-term storage.
- The hour meter display can be easily checked from ground level.
- Shut-off valves have been fitted on the pre-filter piping line and fuel tank drain piping to make servicing easier and prevent pollution from leakage.
- Engine parts can be easily reached via the top and side panels.
- For extra accessibility and servicing convenience, all filters (engine oil filter, fuel pre-filters, fuel filters and pilot filter) are located in the pump compartment.
- An electric transfer pump for initial priming of fuel filters is featured as standard.
- Fine mesh on the side doors and on the cooler itself filters the intake air going to the cooler for better cooling performance and reduced maintenance.

ADBLUE® TANK

Connected to the ECU, sensors in the tank detect low levels of AdBlue® or any other system malfunction. Also equipped with an AdBlue® level indicator during refilling (LED light), to avoid over filling.

CENTRALIZED GREASING POINTS

To make maintenance easier, the greasing points have been centralized. An automatic lubrication system is available as an option.



TECHNICAL SPECIFICATIONS

ENGINE

Designed to deliver superior performance and fuel efficiency, the Develon DL06V diesel engine fully meets the latest Stage V emission regulations. To optimize machine performance, the engine uses high-pressure fuel injectors, air-to-air inter-cooler and electronic engine controls. 4-Cycle Water-Cooled, Wastegate Turbocharged, Diesel Oxidation Catalyst (DOC) & Selective Catalytic Reduction (SCR) and Diesel Particulate Filter (DPF).

Model

Develon DL06V

No. of cylinders

6

Rated power at 1900 rpm

SAE J1995	141 kW (189 hp)
SAE J1349	127 kW (170 hp)

Max. torque at 1400 rpm

82 kgf·m

Idle (low - high)

800 [±10] - 2000 [±25] rpm

Displacement

5890 cm³

Bore × stroke

100 mm × 125 mm

Starter

24 V / 6 kW

Batteries - Alternator

2 × 12 V, 100 Ah – 24 V, 100 A

Air filter

Double element air cleaner

HYDRAULIC SYSTEM

The e-EPOS (Electronic Power Optimising System) is the brain of the excavator – minimising fuel consumption and optimizing the efficiency of the hydraulic system for all working conditions.
To harmonize the operation of the engine and the hydraulics, the e-EPOS is connected to the engine's electronic control unit (ECU) via a data transfer link.

- The hydraulic system enables independent or combined operations
- 2 travel speeds offer either increased torque or high speed
- Cross-sensing pump system for fuel savings
- Auto-deceleration system
- 4 operating modes, 4 power modes
- Flow and pressure control of auxiliary hydraulic circuits from control panel
- Computer-aided pump flow control

Main pump

1 × variable displacement tandem axial piston pump

Maximum flow at 1900 rpm	2 × 222.3 l/min

Pilot pump

Gear pump

Maximum flow at 1900 rpm	26 l/min

Relief valve settings

Implement	350/370 kgf/cm²
Travel	350/365 kgf/cm²
Swing	300 kgf/cm²
Pilot	40 kgf/cm²

UNDERCARRIAGE

Extremely robust construction throughout - made of high-quality, durable materials, with all welded structures designed to limit stresses.

- Track rollers lubricated for life
- Idlers and sprockets fitted with floating seals
- Track shoes made of induction-hardened alloy with triple grouser
- Heat-treated connecting pins
- Hydraulic track adjuster with shock-absorbing tension mechanism

Upper rollers (standard shoe)

2

Lower rollers

8

Number of links & shoes per side

49

Link pitch

190 mm

HYDRAULIC CYLINDERS

High-strength steel piston rods and cylinder bodies. Shock-absorbing mechanism fitted in all cylinders for shock-free operation and extended piston life.

Cylinders	Quantity	Bore × rod diameter × stroke (mm)
Mono boom	2	130 × 90 × 1355
Arm for mono boom	1	135 × 95 × 1490
Bucket	1	120 × 80 × 1060
Articulated boom, upper	2	130 × 90 × 1280
Articulated boom, lower	1	150 × 100 × 1300
Arm for articulated boom	1	140 × 100 × 1450

CAB

The air-conditioning and heating systems are integrated for optimal climate control. An automatically-controlled fan supplies the pressurized and filtered cab air, which is distributed throughout the cab from multiple vents.
The heated air suspension, adjustable operator's seat includes a seat belt. The operator can adjust the ergonomic seat and joystick console separately according to his preferences.

A-weighted emission sound pressure level at the operator's position, LpAd (ISO 6396:2008)

Declared: 72 dB(A)
Measured: 71 dB(A)

A-weighted sound power level, LwAd (2000/14/EC)

Declared: 103 dB(A)
Measured: 102 dB(A)

FLUID CAPACITIES

Fuel tank	310 l
Cooling system (radiator)	30.7 l
AdBlue® (DEF) tank	31.5 l
Hydraulic oil tank	190 l
Engine oil	27 l
Swing drive	5 l
Travel device	2 × 4 l

SWING MECHANISM

The swing mechanism uses an axial piston motor, driving a 2-stage planetary reduction gear bathed in oil for maximum torque.

- Swing bearing: single-row, shear type ball bearing with induction hardened internal gear
- Internal gear and pinion immersed in lubricant

Maximum swing speed

11.5 rpm

Maximum swing torque

9626 kgf·m

DRIVE

Each track is driven by an independent, high-torque axial piston motor through a planetary reduction gearbox. Two levers / foot pedals guarantee smooth travel with counter-rotation on demand. The track frame protects the travel motor, brake and planetary gears. The multi-disc track brakes are spring-applied and hydraulic released.

Travel speed (low - high)

3.2 - 5.8 km/h

Maximum traction

29.2 t

Maximum gradeability

35° / 70%

WEIGHT

	Shoe width (mm)	Machine weight (t)	Ground pressure (kgf/cm²)
Triple grouser	600 (STD)	24.3	0.52
	700	24.6	0.45
	800	24.9	0.40
	900	25.2	0.36

COMPONENT WEIGHTS

Item	Unit	Weight	Remarks
Upper structure without front	kg	12421	With counterweight
Lower structure assembly	kg	7724	LC, 600 mm shoe
Counterweight	kg	6450	7466 (7.45 t option)
Front assembly	kg	4233	
5.7 m mono boom	kg	1482	Including bushing
5.85 m articulated boom	kg	1953	
2.4 m arm	kg	599	
2.9 m arm	kg	687	

TECHNICAL SPECIFICATIONS

BUCKETS

Bucket Type	Capacity (m³) SAE	Width (mm)		Weight (kg)	600 mm shoes			
					Mono boom		Articulated boom	
		With side cutters	W/O side cutters		Arm 2.40 m	Arm 2.90 m	Arm 2.40 m	Arm 2.90 m
GP	0.51	772	722	529	A	A	A	A
	0.81	1126	1064	654	A	A	A	A
	0.92	1236	1172	697	A	A	A	A
	1.05	1370	1308	751	A	A	A	A
	1.10	1377	1316	836	A	A	A	A
	1.17	1491	1428	809	A	A	A	B
	1.28	1605	1542	848	A	B	B	B
	1.40	1668	1607	976	B	C	C	C
H Class	0.60	796	750	699	A	A	A	A
	0.76	946	900	768	A	A	A	A
	0.92	1096	1050	855	A	A	A	A
	1.08	1246	1200	923	A	A	A	B
	1.24	1396	1350	992	A	B	B	C
	1.35	1496	1450	1056	B	C	C	C
	1.40	1546	1500	1079	B	C	C	D
	1.51	1646	1600	1125	C	D	C	D
	0.76	946	900	775	A	A	A	A
	0.92	1096	1050	861	A	A	A	A
	1.08	1246	1200	930	A	A	A	B
S Class	0.91	1094	1050	1048	A	A	A	A
	1.07	1244	1200	1155	A	B	A	B
	1.23	1394	1350	1237	B	C	B	C

A: Suitable for materials with a density less than or equal to 2100 kg/m³ B: Suitable for materials with a density less than or equal to 1800 kg/m³
C: Suitable for materials with a density less than or equal to 1500 kg/m³ D: Suitable for materials with a density less than or equal to 1200 kg/m³
Based on ISO 10567 and SAE J296, arm length without quick-coupler. For reference only.

DEVELON BUCKETS

4 More. More choice - More durable - More strength - More performance!

General Construction Bucket



The General purpose bucket is designed for digging and re-handling soft to medium materials (e.g. materials with low wear characteristics such as top-soil, loam, coal).

Heavy Construction Bucket



The Heavy duty bucket is designed for mass excavations in dense materials such as hard packed clay, shot limestone, limited rock content and gravel.

Severe Mining Bucket



The Severe duty bucket is designed for durability in digging compact materials like loose or blasted rock, hard packed clay and stone.

X-treme Mining Bucket



The X-treme duty bucket is designed as a long-life version of the Severe duty bucket for digging in the most abrasive materials.

DIMENSIONS

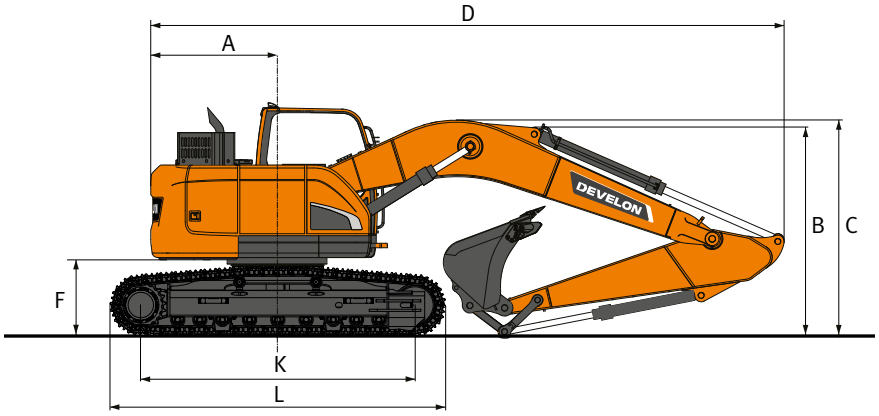

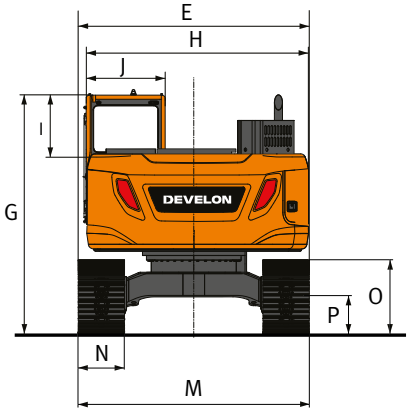

DIMENSIONS

	Unit	Mono boom		Articulated boom	
Boom length	**mm**	**5700**		**5850**	
Arm length	**mm**	**2400**	**2900**	**2400**	**2900**
Bucket capacity	**m³**	**1.05**	**0.92**	**0.92**	**0.81**
A Tail swing radius	mm	1724	1724	1724	1724
B Shipping height (boom)	mm	2983	2871	3021	3020
C Shipping height (hose)	mm	3088	2980	3021	3020
D Shipping length	mm	9940	8970	9160	9180
E Shipping width	mm	2990	2990	2990	2990
F Counterweight clearance*	mm	1092	1092	1147	1092
G Height over cab	mm	3123	3123	3262	3123
H House width	mm	2870	2870	2870	2870
I Cab height above house	mm	679.5	679.5	679.5	679.5
J Cab width	mm	1022	1022	1022	1022
K Tumbler distance	mm	3650	3650	3650	3650
L Track length	mm	4446.3	4446.3	4556.3	4446.3
M Undercarriage width STD/LC	mm	2990	2990	2990	3190
N Shoe width	mm	600	600	600	800
O Track height *	mm	883	883	1045	883
P Ground clearance *	mm	450.5	450.5	531.5	450.5

*** : without grouser**

WORKING RANGE

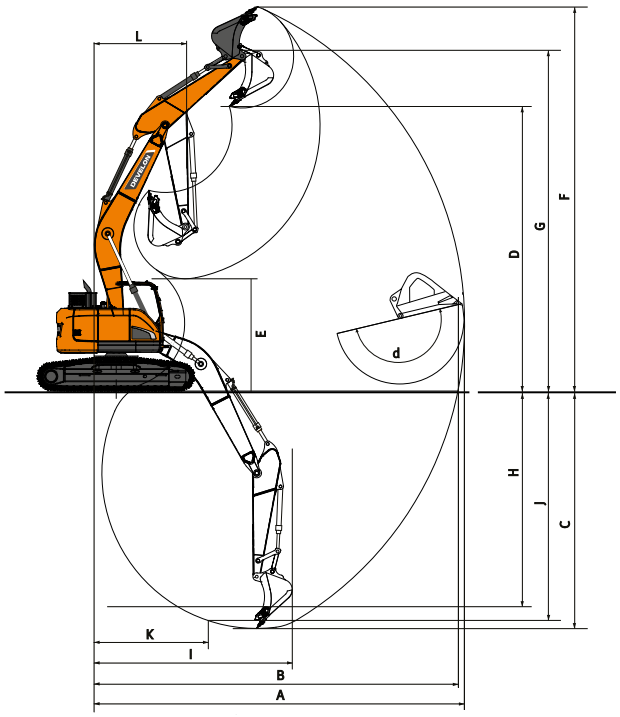

WORKING RANGE

	Unit	Mono boom		Articulated boom	
Boom length	**mm**	**5700**		**5850**	
Arm length	**mm**	**2400**	**2900**	**2400**	**2900**
Bucket capacity	**m³**	**1.05**	**0.92**	**0.92**	**0.81**
A Max. digging reach	mm	9415	9830	9730	10175
B Max. digging reach (ground)	mm	9220	9645	9540	9990
C Max. digging depth	mm	6180	6680	5970	6440
D Max. loading height	mm	7680	7940	8415	8785
E Min. loading height	mm	3725	3145	4305	3690
F Max. digging height	mm	10560	10805	11345	11715
G Max. bucket pin height	mm	9145	9405	9880	10250
H Max. vertical wall depth	mm	5050	5340	4945	5340
I Max. radius vertical	mm	6270	6575	6345	6610
J Max. digging depth (8'level)	mm	5935	6455	5850	6330
K Min. radius 8'level	mm	2615	2565	1700	1700
L Min. swing radius	mm	2545	2310	2370	2310
d Bucket angle	°	177	177	177	177

DIGGING FORCES (ISO)

	Unit	Mono boom		Articulated boom	
Boom length	**mm**	**5700**		**5850**	
Arm length	**mm**	**2400**	**2900**	**2400**	**2900**
Bucket capacity	**m³**	**1.05**	**0.92**	**0.92**	**0.81**
BUCKET (Normal/Press. Up)	ton	15.6 / 16.5	15.6 / 16.5	15.6 / 16.5	15.6 / 16.5
ARM (Normal/Press. Up)	ton	12.4 / 13.1	10.6 / 11.2	12.4 / 13.1	10.6 / 11.2

LIFTING CAPACITIES

MONO BOOM • W/O BUCKET

(UNIT: 1000 KG)

A	1.5 m		3.0 m		4.5 m		6.0 m		7.5 m		Max. reach		
B													A
Mono boom 5.70 m • Arm 2.40 m • Shoe 600 mm • Counterweight 6.45 t													
9.0 m											8.18 *	8.18 *	3.44
7.5 m					7.05 *	7.05 *					6.51 *	5.97	5.60
6.0 m					7.44 *	7.44 *	6.90 *	5.35			6.04 *	4.34	6.80
4.5 m					8.90 *	8.06	7.44 *	5.18	6.03 *	3.64	5.98 *	3.63	7.51
3.0 m					10.89 *	7.48	8.29 *	4.94	6.09	3.56	5.65	3.30	7.87
1.5 m					12.35 *	7.03	8.31	4.72	5.98	3.46	5.50	3.19	7.94
0.0 m					12.68 *	6.84	8.15	4.59	5.91	3.40	5.68	3.27	7.71
-1.5 m			11.39 *	11.39 *	12.04 *	6.83	8.12	4.55			6.31	3.62	7.17
-3.0 m			13.76 *	13.53	10.39 *	6.95	7.59 *	4.66			7.12 *	4.45	6.22
-4.5 m			9.14 *	9.14 *	6.61 *	6.61 *					6.30 *	6.30 *	4.61
Mono boom 5.70 m • Arm 2.90 m • Shoe 600 mm • Counterweight 6.45 t													
9.0 m											5.67 *	5.67 *	4.34
7.5 m					6.22 *	6.22 *	5.35 *	5.35 *			4.80 *	4.80 *	6.19
6.0 m					6.67 *	6.67 *	6.34 *	5.45			4.52 *	3.93	7.28
4.5 m			10.68 *	10.68 *	8.11 *	8.11 *	6.95 *	5.26	6.19 *	3.69	4.50 *	3.34	7.95
3.0 m					10.14 *	7.60	7.87 *	4.99	6.11	3.58	4.66 *	3.05	8.29
1.5 m					11.86 *	7.06	8.32	4.73	5.97	3.45	5.02 *	2.95	8.36
0.0 m			6.59 *	6.59 *	12.57 *	6.78	8.12	4.55	5.87	3.36	5.23	3.01	8.14
-1.5 m	7.18 *	7.18 *	11.18 *	11.18 *	12.28 *	6.71	8.04	4.48	5.85	3.34	5.72	3.27	7.63
-3.0 m	11.98 *	11.98 *	15.13 *	13.20	11.02 *	6.79	8.10	4.53			6.86	3.90	6.75
-4.5 m			11.18 *	11.18 *	8.24 *	7.05					6.64 *	5.61	5.31
Mono boom 5.70 m • Arm 2.90 m • Shoe 600 mm • Counterweight 7.45 t													
9.0 m											5.67 *	5.67 *	4.34
7.5 m					6.22 *	6.22 *	5.35 *	5.35 *			4.80 *	4.80 *	6.19
6.0 m					6.67 *	6.67 *	6.34 *	5.89			4.52 *	4.27	7.28
4.5 m			10.68 *	10.68 *	8.11 *	8.11 *	6.95 *	5.70	6.19 *	4.02	4.50 *	3.66	7.95
3.0 m					10.14 *	8.25	7.87 *	5.43	6.55	3.91	4.66 *	3.35	8.29
1.5 m					11.86 *	7.71	8.74 *	5.17	6.41	3.78	5.02 *	3.24	8.36
0.0 m			6.59 *	6.59 *	12.57 *	7.42	8.71	4.99	6.31	3.69	5.63	3.31	8.14
-1.5 m	7.18 *	7.18 *	11.18 *	11.18 *	12.28 *	7.35	8.64	4.92	6.29	3.67	6.15	3.60	7.63
-3.0 m	11.98 *	11.98 *	15.13 *	14.40	11.02 *	7.44	8.21 *	4.97			6.92 *	4.28	6.75
-4.5 m			11.18 *	11.18 *	8.24 *	7.70					6.64 *	6.13	5.31

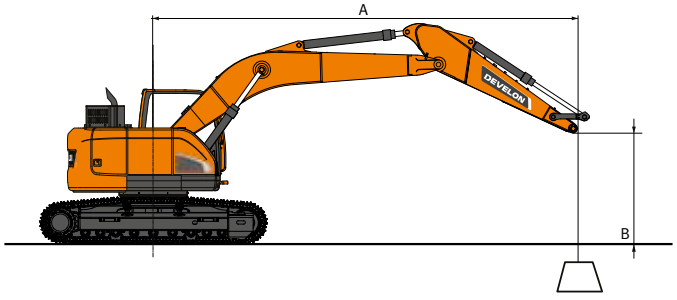

: Rating over front.
: Rating over side or 360°.

1. Lifting capacities are in compliance with ISO 10567:2007(E).
2. The load point is at the end of the arm.
3. * = The nominal loads are based on hydraulic capacity.
4. The nominal loads shown do not exceed 75% of tipping loads or 87% of hydraulic lifting capacity.
5. For lifting capacity with bucket, simply subtract the actual weight of the bucket from the values.
6. The configurations indicated do not necessarily reflect the standard equipment of the machine.

LIFTING CAPACITIES

ARTICULATED BOOM • W/O BUCKET

(UNIT: 1000 KG)

A	1.5 m		3.0 m		4.5 m		6.0 m		7.5 m		Max. reach		
B													A
Articulated boom 5.85 m • Arm 2.40 m • Shoe 600 mm • Counterweight 6.45 t													
9.0 m			9.44 *	9.44 *							8.05 *	8.05 *	3.98
7.5 m					8.09 *	8.09 *					6.53 *	5.37	5.94
6.0 m			7.42 *	7.42 *	8.50 *	8.47	6.65 *	5.30			5.86 *	3.99	7.08
4.5 m					10.13 *	7.94	7.12 *	5.10	5.59 *	3.57	5.43 *	3.36	7.76
3.0 m					12.23 *	7.27	7.98 *	4.83	5.81 *	3.47	5.28 *	3.06	8.12
1.5 m							8.21	4.58	5.91	3.36	5.21	2.96	8.18
0.0 m					11.48 *	6.63	8.05	4.44	5.84	3.29	5.38	3.04	7.96
-1.5 m			9.36 *	9.36 *	9.57 *	6.65	7.53 *	4.42			5.24 *	3.35	7.44
-3.0 m					6.65 *	6.65 *	5.04 *	4.54			4.02 *	4.02 *	6.52
Articulated boom 5.85 m • Arm 2.90 m • Shoe 600 mm • Counterweight 6.45 t													
9.0 m					6.34 *	6.34 *					5.61 *	5.61 *	4.82
7.5 m					6.57 *	6.57 *	6.08 *	5.46			4.79 *	4.69	6.53
6.0 m					6.71 *	6.71 *	6.28 *	5.41	4.85 *	3.68	4.50 *	3.61	7.58
4.5 m					9.23 *	8.14	6.73 *	5.19	5.32 *	3.63	4.45 *	3.09	8.22
3.0 m					11.79 *	7.42	7.55 *	4.88	5.58 *	3.49	4.56 *	2.83	8.55
1.5 m					12.45 *	6.83	8.23	4.59	5.91 *	3.35	4.83	2.73	8.61
0.0 m					11.89 *	6.55	8.02	4.40	5.80	3.25	4.95	2.79	8.41
-1.5 m			9.54 *	9.54 *	10.32 *	6.51	7.95	4.34	5.78	3.23	5.19 *	3.03	7.91
-3.0 m					7.76 *	6.63	6.00 *	4.41			4.28 *	3.59	7.06
-4.5 m													
Articulated boom 5.85 m • Arm 2.40 m • Shoe 600 mm • Counterweight 7.45 t													
9.0 m			9.44 *	9.44 *							8.05 *	8.05 *	3.98
7.5 m					8.09 *	8.09 *					6.53 *	5.82	5.94
6.0 m			7.42 *	7.42 *	8.50 *	8.50 *	6.65 *	5.74			5.86 *	4.34	7.08
4.5 m					10.13 *	8.59	7.12 *	5.54	5.59 *	3.91	5.43 *	3.68	7.76
3.0 m					12.23 *	7.92	7.98 *	5.26	5.81 *	3.80	5.28 *	3.37	8.12
1.5 m							8.81	5.02	6.10 *	3.69	5.36 *	3.26	8.18
0.0 m					11.48 *	7.27	8.65	4.88	6.28	3.62	5.68 *	3.35	7.96
-1.5 m			9.36 *	9.36 *	9.57 *	7.29	7.53 *	4.86			5.24 *	3.69	7.44
-3.0 m					6.65 *	6.65 *	5.04 *	4.98			4.02 *	4.02 *	6.52
Articulated boom 5.85 m • Arm 2.90 m • Shoe 600 mm • Counterweight 7.45 t													
9.0 m					6.34 *	6.34 *					5.61 *	5.61 *	4.82
7.5 m					6.57 *	6.57 *	6.08 *	5.46			4.79 *	4.69	6.53
6.0 m					6.71 *	6.71 *	6.28 *	5.41	4.85 *	3.68	4.50 *	3.61	7.58
4.5 m					9.23 *	8.14	6.73 *	5.19	5.32 *	3.63	4.45 *	3.09	8.22
3.0 m					11.79 *	7.42	7.55 *	4.88	5.58 *	3.49	4.56 *	2.83	8.55
1.5 m					12.45 *	6.83	8.23	4.59	5.91 *	3.35	4.83	2.73	8.61
0.0 m					11.89 *	6.55	8.02	4.40	5.80	3.25	4.95	2.79	8.41
-1.5 m			9.54 *	9.54 *	10.32 *	6.51	7.95	4.34	5.78	3.23	5.19 *	3.03	7.91
-3.0 m					7.76 *	6.63	6.00 *	4.41			4.28 *	3.59	7.06

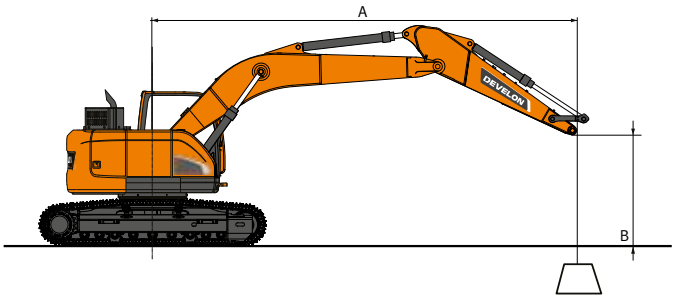

: Rating over front.
: Rating over side or 360°.

1. Lifting capacities are in compliance with ISO 10567:2007(E).
2. The load point is at the end of the arm.
3. * = The nominal loads are based on hydraulic capacity.
4. The nominal loads shown do not exceed 75% of tipping loads or 87% of hydraulic lifting capacity.
5. For lifting capacity with bucket, simply subtract the actual weight of the bucket from the values.
6. The configurations indicated do not necessarily reflect the standard equipment of the machine.

STANDARD AND OPTIONAL EQUIPMENT

● Standard ○ Optional

Engine

- ● Develon DL06V, Stage V compliant, SCR, DOC and DPF post treatment, water-cooled diesel engine with Wastegate Turbocharger and air-to-air intercooler
- ● Auto-idle function
- ● Auto shut-off
- ● No EGR

Hydraulic system

- ● Boom and arm flow regeneration
- ● Fine swing mode, on or off from cab
- ● Swing anti-rebound valves
- ● Spare ports (valve)
- ● 1-touch power boost function
- ● Double way line high flow + Breaker piping (PE3C)
- ● Smart Power Control (SPC)
- ● Cylinder cushioning & contamination seals
- ○ Clamshell piping (diverter valve from bucket cylinder)
- ○ Hydraulic piping low flow for rotating or tilting tool (joystick control)
- ○ Hydraulic piping for quick-coupler

Cab & interior

- ● Pressurized sound-insulated and CabSus mounted cab
- ● Fully adjustable air suspension seat with heater
- ● Air conditioning with climate control
- ● Pull-up type front window sun roller blind and removable lower front window
- ● Sliding left window
- ● Intermittent upper and lower windshield parralel wiper
- ● Rain visor
- ● Rear window defroster switch
- ● Adjustable PPC wrist control levers for arm boom bucket and swing
- ● Joysticks & pedal provide proportional control of auxiliary hydraulic lines
- ● Pedal for auxiliary control 1 & 2 ways
- ● Jog shuttle switch
- ● DEVELON Smart Touch – 8" touch screen, all-in-one
- ● Attachment management system
- ● Engine speed (RPM) control dial
- ● Automatic travel speed
- ● 4 operating modes & 4 working modes
- ● Electric horn
- ● Cigarette lighter
- ● Ceiling light
- ● Cup holder
- ● Multiple storage compartments (e.g. document holder under seat)
- ● Storage area (tools etc.)
- ● Heating and cooling lunch box
- ● Flat spacious easy-to-clean floor
- ● Keyless start (Develon Smart Key) & remote door lock/unlock
- ● Anti-theft protection
- ● 12 V spare power socket
- ● Serial communication port for laptop PC interface
- ● Remote radio ON/OFF switch
- ● Loudspeakers and connections for radio
- ● Radio + MP3 (stereo) with Bluetooth streaming and handsfree call system
- ● Rear and side view camera
- ○ 360° all-around view camera (AVM)
- ○ Fully adjustable air suspension seat (heating & cooling)

Safety

- ● Roll Over Protective Structure (ROPS)
- ● Boom and arm cylinder safety valves
- ● Overload warning device
- ● Large guard rails on upper structure and steps
- ● Rotating beacon
- ● Punched metal anti-slip plates
- ● Hydraulic safety lock lever
- ● Safety glass
- ● Hammer for emergency escape
- ● Right and left rear-view mirrors
- ● Lockable fuel cap and covers
- ● Battery cut-off switch
- ● Engine restart prevention system
- ● Emergency engine stop switch and hydraulic pump control switch
- ● Guard rails (ISO 2867:2011)
- ● Parking brake
- ● LED 8 work lights (2 boom lamp, 4 body lamps, 2 additional lamps on cab)
- ○ LED work lights 4 additional lamps (2 in the front, 2 in the rear of the cab)
- ○ Falling Objects Guard System – top and front cab guards (ISO 10262 level II and SAE J1356)
- ○ Front window upper and lower guards

Other

- ● 5700 mm mono boom – 2900 mm arm – 6450 kg counterweight
- ● DEVELON Fleet Management Web (telematic system)
- ● Auto shut-off fuel filler pump
- ● Double element air cleaner and pre-filtered Turbo dust separator
- ● Fuel pre-filter with water separator sensor
- ● Dust screen for radiator/oil cooler
- ● Self-diagnostic function
- ● Alternator (24 V 100 A) – Battery (2 × 12 V 150 Ah)
- ● Hydrostatic drive with 2-speed power shift transmission
- ● Remote greasing for swing circle and work group pivot points
- ○ Arms: 2400 mm, 2900 mm for articulated and mono boom
- ○ Boom: 5850 mm articulated boom
- ○ 7450 kg counterweight
- ○ DEVELON buckets: full range of GP HD & rock buckets
- ○ DEVELON breakers and DEVELON quick-couplers
- ○ Automatic lubrication system

Undercarriage

- ● Standard fixed undercarriage 2990 mm with 600 mm shoes
- ● 600 mm triple grouser shoes
- ○ 700 mm triple grouser shoes
- ○ 800 mm triple grouser shoes
- ○ 900 mm triple grouser shoes
- ○ Dozer blade for 600 mm shoes only

Powered by **Innovation**

DISCOVER MORE:
DX235LCR-7

DEVELON

DOOSAN Infracore Europe s.r.o.
IBC - Pobřežní 620/3, 186 00 Praha 8-Karlín
Czech Republic

©2023 DEVELON D4601011-EN (04-23)

Certain specification(s) are based on engineering calculations and are not actual measurements. Specification(s) are provided for comparison purposes only and are subject to change without notice.
Specification(s) for your individual Develon equipment will vary based on normal variations in design, manufacturing, operating conditions, and other factors. Pictures of Develon units may show other than standard equipment.