9 Series

Crawler Excavators

DX230LC-9

Operating weight:	23 600 kg
Engine power:	141 kW / 189.1 hp
Bucket capacity:	1.2 m^3

DX260LC-9

Operating weight:	26 300 kg
Engine power:	171.1 kW / 229.4 hp
Bucket capacity:	1.4 m^3



HD

DEVELON

DEVELON

Since 1937, Develon continues to innovate, driving change in construction equipment as South Korea's leading brand.

Bold
We push the limits of performance, safety, and user experience—delivering machines that don't just meet expectations but exceed them.

Smart
Our advanced technology and engineering expertise drive efficiency, productivity, and sustainability in every machine we build.

Collaborative
By listening, adapting, and innovating alongside our customers and partners, we create solutions that move industries forward.

Develon: Powered by Innovation
With a bold vision, smart execution, and a collaborative spirit, Develon continues to lead the way—building the future, one breakthrough at a time.

We are Develon.

Develon is a bold name that reflects our core ambition to continue developing onwards and to make a positive mark on our world. Moving forward, we will continue providing innovative products and solutions that advance the world we live in today.



Break New Ground with Develon's 9 Series Crawler Excavators

The all-new Develon Crawler Excavators redefine productivity, safety, operator convenience, and versatility with cutting-edge design and smart technology. Ranging from 23 to 28 tons, they deliver superior lifting performance and efficiency while reducing fuel consumption. They also offer advanced safety features, including a virtual wall and the Smart AVM.

Set the Pace for Unmatched Productivity

- Improved performance with up to a 20% increase in engine output and an 8% reduction in fuel consumption
- Smart Breaker and an onboard weighing system further enhance efficiency and precision

Smart Safety Features

- Smart AVM with object and human recognition
- Enhanced stability with heavier counterweight and Advanced Lift Assist
- Virtual wall for secure operation in any environment
- E-Stop for automatic machine shutdown when an object or person is detected within 3 meters of the working zone

More Comfort and Convenience

- Spacious new cabin with a larger 12.8" display, an optional second display, a new full electronic joystick, improved lighting, and a digital key—maintaining one of the largest cabins on the market
- Advanced assist systems for streamlined operation
- Prognostic & health management to prevent failures and minimize machine downtime

Lower Ownership Costs

- Extended maintenance intervals—from 500 hours to 1 000 hours—boost productivity and reduce long-term costs for Develon machines

↑1000 hours

Features may vary by region and model

↑20%

Increased Productivity

The new Develon DX05V engine (Stage V compliant) boosts productivity with its powerful performance, impressive operating weight, and class-leading digging and lifting capacities. Its auto-shut-off reduces idle time and wear, while the engine's advanced design enhancements increase productivity by 10% for the DX230LC-9 and 20% for the DX260LC-9—maximizing efficiency on every job.

↓8%

Reduced Fuel Consumption

The full electro hydraulic control (FEH) system—featuring electronic pumps, main control valves (MCV), and relief control valves (RCV)—helps save up to 1 530 liters of fuel for the DX230LC-9 and 2 665 liters for the DX260LC-9 every 1 500 hours of operation, making it easier on both your wallet and the environment.

Machine Efficiency at its Best

With the new Develon DX05V engine and advanced FEH system, you'll get the best Develon has to offer —powerful performance, fuel savings, and reduced wear for maximum productivity and efficiency.

The performance improvements in the latest 9 Series are measured against the previous -7 models

Operators at Their Best

Enjoy new assist systems designed to boost productivity and simply make the job easier. These features, built specifically for Develon machines, enhance efficiency, reduce fatigue, and provide effective solutions for improved performance.

Weighing System
Weighing system helps operators easily monitor production levels and manage volumes, ensuring dump trucks are loaded to their optimal capacities. By preventing overloading, it simplifies weight compliance, making the operator's job more efficient and stress-free.

Smart Breaker
Our Smart Breaker prevents blank firing, reducing wear on the machine and its components while minimizing operator fatigue for a more comfortable and efficient experience. With auto breaker, constant button pressing is eliminated, ensuring smoother operation.

Safety That Goes the Extra Mile

Develon sets new safety standards with advanced technologies inspired by the car industry, bringing innovation and reliability to the construction sector. From the Smart AVM, which provides a 360-degree view of the job site, to Advanced Lift Assist, which actively monitors lifting capacity and potential tipping hazards, these unique, market-leading features are designed to maximize operator safety and provide peace of mind, no matter how challenging the job site may be.



Features may vary by region and model.

Protect What Matters

Develon machines put safety first, with smart features that keep you protected every step of the way. With improved stability, real-time hazard alerts, and intuitive features, you can feel confident and secure on the job.

Stay One Step Ahead

Smart AVM & HDS

- The Smart AVM and the Human Detection System (HDS) are market-leading systems that use six cameras, radar sensors, and AI-powered object detection to provide a full 360-degree view around the machine.

Integrated E-Stop*

- Our advanced E-Stop system takes jobsite safety to the next level and helps reduce risks in high-traffic zones by combining the Human Detection System (HDS) with intuitive emergency stop technology. Powered by Smart AVM and upgraded radar sensors, E-Stop monitors a 330-degree field of view and detects objects and people up to 6 meters away.
- When a person is detected, the system delivers both visual and audible alerts to the operator. As the machine approaches within 6 meters, it automatically slows down. If the distance closes to 3 meters, the E-Stop system brings the machine to a complete stop.



Note: E-Stop feature may not be available during the initial months following commercial launch.

Set Your Boundaries

- Our virtual wall feature keeps operations safe by limiting the machine's movement to specific areas and reducing the chance of collisions.
- Ideal for tight urban spaces or underground sites with obstacles like wires and pipes, safety zones let operators work with confidence.
- Possible to set up the maximum height, maximum depth, maximum reach, and swing angles.

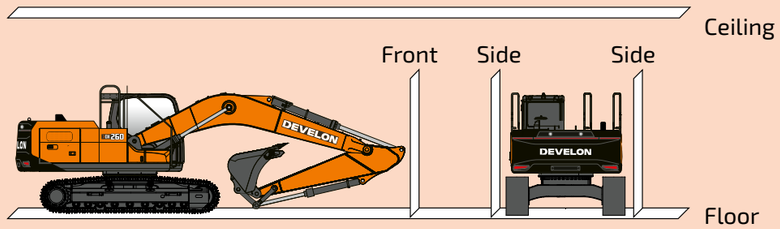

Rock-Solid Stability

Advanced Lift Assist

- Advanced Lift Assist improves operator safety by actively showing the machine's current lifting capacity and alerting operators to potential tipping hazards.
- This industry-first feature utilizes a lifting force table to highlight risk zones on the gauge panel during maneuvers and on inclines. Especially valuable for large companies with frequent operator machine changes, it ensures consistent safety across all equipment.

New Counterweight

- With the added weight of the heavier counterweight, the stability of our new DX260LC-9 excavators has been enhanced, making lifting heavy loads safer. This upgrade reduces the risk of tipping, allowing operators to work with greater confidence and ease.

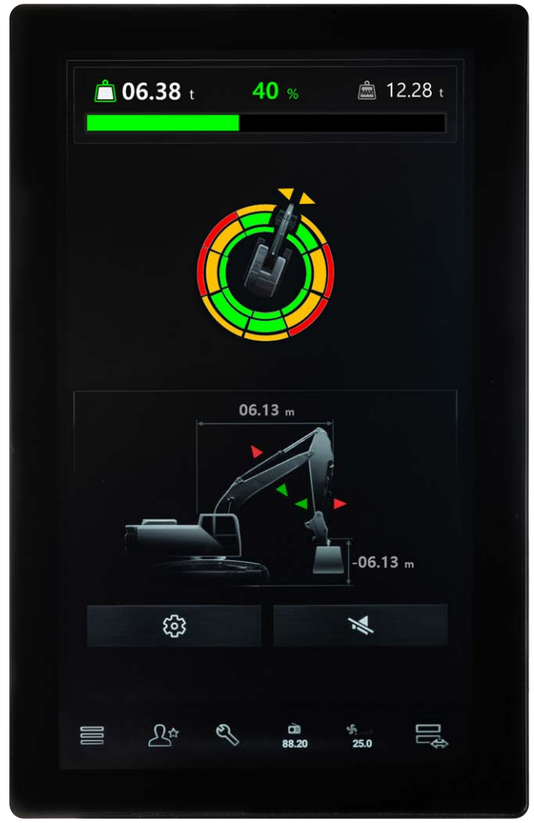



Versatile, Smooth, and Ready

Develon machines are designed with operator comfort and efficiency in mind. Advanced features like Machine Guidance 2D, Smart Control 2D, fine swing, and intelligent floating boom mode combine to provide a more comfortable, productive work experience, enabling operators to work faster, smarter, and with greater control.



Machine Guidance 2D & Smart Control 2D
Develon's Machine Guidance 2D and Smart Control 2D systems are designed to make your job easier. These smart technologies provide precise guidance and grade control, helping you work with more accuracy and efficiency. By simplifying complex tasks, Develon machines allow you to get more done in less time, improving performance and reducing costs on the job site.

4 Work Modes & 4 Power Modes
The operator can easily optimize performance with these selectable modes:

- 4 Work Modes: 1-way, 2-way, digging, and lifting modes, each designed for specific tasks.
- Tilt Rotator Settings: Tailored for precision and minimizing back pressure during operation.
- 4 Power Modes: eco, standard, power, and power plus, all featuring smart power control to balance power and fuel efficiency.
- Intelligent Floating Boom Mode: Reduces vibration when using a breaker and ensures smooth, precise bucket movement for enhanced control and efficiency.

Fine Swing Function
The fine swing function smooths out the swing motion, reducing shaking when starting or stopping. This makes the operation safer, preventing objects from falling off the excavator. It also ensures a smooth stop by controlling swing speed and eliminating jolts during direction changes.

Conquer The Day with Comfort

The new cabin offers one of the most spacious and ergonomic environments in the industry, designed to maximize operator comfort and productivity. With a ROPS cabin that reduces vibrations, enhances safety, and increases overall efficiency, this design provides a truly convenient and comfortable experience for operators.

New Operator Compartment

- A spacious cabin offering excellent visibility and enhanced lighting, including ambient light, creates a comfortable environment for long shifts.
- With 10 color options available, operators can customize the atmosphere to suit their preferences, especially during late-night tasks. Plus, the lighting adjusts according to the selected work mode, providing intuitive task recognition without distractions.

12.8" High Resolution Monitor

- The large 12.8-inch high-resolution display provides operators with an engaging, easy-to-use interface to access machine information and manage various functions.
- Customizable to suit personal preferences, the screen allows operators to split it for improved multitasking. For enhanced efficiency, a dual monitor option is also available, enabling up to four screen splits to streamline workflow and boost operational performance.

New Joystick

- The newly designed joystick offers operators the ability to personalize controls for maximum comfort and ease. It enhances movement control with options like "stick steer" and "thumb wheel steer," in addition to traditional levers and pedals.
- This flexibility ensures smoother, more precise operation, tailored to the operator's preferred style, making every task easier to manage.

Comfortable Seat

- A heated seat with an optional built-in cooling function for ultimate comfort during long shifts.

Digital Key

- A Bluetooth-enabled digital key that lets you unlock the cabin, start the engine, and adjust the air conditioning through the My Develon app, offering effortless machine control from a distance—no physical key needed.



Get More Out of Your Machine

Develon machines are designed for easy maintenance, with extended service intervals and accessible components, helping you save time and money.

Prognostics and Health Management (PHM)

- Develon's latest models feature advanced PHM technology, continuously monitoring critical components like hydraulic oil, engine oil, and main pumps. This smart system predicts maintenance needs, allowing for timely interventions that minimize downtime and lower service costs.
- With remote diagnostics, operators gain real-time insights and faster issue detection, keeping equipment running at peak performance.

Easy Maintenance

- Large guardrails, anti-slip steps, and plates provide safe access to the upper structure.
- The air conditioning filter is easily accessible with a lockable cover, while the battery cut-off switch allows for easy disconnection during long-term storage.
- Engine parts and filters are easy to access for quick maintenance, with shut-off valves to help prevent leaks.
- An electric transfer pump makes priming fuel filters simple, while fine mesh on the side doors and cooler improves cooling and reduces upkeep.
- Greasing points are centralized, and an automatic lubrication system is available for added convenience.

Extended Maintenance Intervals

- Develon sets the standard for extended maintenance intervals, offering engine oil and filter changes at 1 000 hours—twice as long as typical competitors. Hydraulic oil changes can last up to 4 000 hours, minimizing downtime and lowering maintenance costs.

Maintenance Intervals

	DX230LC-9	DX260LC-9
Engine Oil & Filter	1 000 h	
Pre/Main Fuel Filter	1 000 h	
Hydraulic Oil Return Filter	1 000 h	
Air Conditioner Filter	1 000 h	
Air Cleaner Filter	2 000 h	
Engine Coolant	6 000 h	
Hydraulic Oil	4 000 h	
DEF Filter	4 500 h or 3 years	

Features may vary by region and model

My Develon > Management on the Jobsite > Work Efficiency Management > Preventive Management > Proactive Service



Monitor Your Equipment From Anywhere

To compete and succeed, your equipment must maximize jobsite productivity and profitability. Develon machines do both. To ensure a high return on investment, we include more premium features as standard on every model. By making them standard, Develon gives you a competitive edge, helping operators work more efficiently and enhancing safety during long days in the field.

Telematics Terminal
A terminal device is installed and connected to a machine to capture machine data.

Telecommunication
Develon offers dual-mode communication (mobile and satellite) for maximum coverage.

My Develon
Stay informed with My Develon — the digital platform that consolidates all equipment information and digital services in one place for quick and easy access.

Operation Hours	Total operating hours and hours by mode
Fuel Efficiency*	Fuel levels and consumption
Reports & Location	Operation report and utilization, GPS, and geofencing
Warnings & Alerts	Detect machine warnings, antenna disconnections, and geo/time fence breaches
Filter & Oil Management	Preventive maintenance through scheduled part replacements

**Features may not be present in all models. Please contact your sales representative for more information on this feature.*

DX230LC-9
Technical Specifications

Engine

Designed to deliver superior performance and best in class fuel efficiency, the Develon DX05V diesel engine fully meets the latest Stage V emission regulations. To optimize machine performance, it features high-pressure fuel injectors, twin turbo chargers with air-to-air intercooler, and electronic engine controls. It also includes a 4-cycle water-cooled system, and common rail direct injection.

Model	Develon DX05V
Number of cylinders	4
Rated power (at 1 700 rpm)	141 kW / 189.1 hp (SAE J1995)
Maximum torque (at 1 400 rpm)	97.4 kgf-m
Displacement	5 018 cm^3
Batteries – Alternator	2 × 12 V, 150 Ah - 24 V, 90 A

Undercarriage

Built for durability, the undercarriage features an extremely robust construction made from high-quality materials. All welded structures are designed to minimize stress, ensuring long-lasting performance.

- Track rollers lubricated for life
- Idlers and sprockets fitted with floating seals
- Track shoes made of induction-hardened alloy with triple grouser
- Heat-treated connecting pins
- Hydraulic track adjuster with shock-absorbing tension wheel

Upper rollers	2, shaft
Upper roller diameter	120 mm
Lower rollers	8, single
Lower roller diameter	154 mm
Number of links & shoes per side	49
Link pitch	190 mm
Bushing diameter	59.41 mm
Track gauge	2 390 mm
Tumbler distance	3 650 mm

Track Shoe

Shoe width (mm)	Ground pressure (kgf/cm^2)	Machine weight (ton)
Std. 600G	0.50	23.6
Opt. 700G	0.44	23.9
Opt. 800G	0.39	24.2
Opt. 900G	0.34	24.3

Hydraulic System

The new model features a full electro hydraulic (FEH) system that offers precise control through advanced software. Paired with the edge cloud computing (ECC) platform, the system allows for easy remote software updates, keeping it up to date with the latest features. The FEH system collects and analyzes real-time data to optimize efficiency and productivity, making it a smarter, more responsive system in any working condition.

Pumps	Type	Max. flow rate	Displacement
Main	2 × swash plate, axial piston	2 × 212 l/min	2 × 125 ml/rev

Swing Mechanism

The swing mechanism features an axial piston motor that drives a 2-stage planetary reduction gear, fully immersed in oil for maximum torque.

- Swing bearing: Single-row, shear-type ball bearing with an induction-hardened internal gear
- Internal gear and pinion: Immersed in lubricant for enhanced durability and smooth operation

Swing Motor

Type	axial piston
Displacement	138.3 ml/rev
Crossover relief valve setting	27.5 MPa
Max. supply flow (at 1 750 rpm)	218 l/min
Max. output torque	1 189 kgf.m

Swing Performance

Max. swing speed (EFF=1.00)	11.1 rpm
Max. swing torque (EFF=1.00)	82.6 kN.m
Act. swing speed (EFF=0.98)	10.9 rpm
Act. swing torque (EFF=0.81)	66.9 kN.m

Arm

	Length (mm)	Weight (kg)	Digging force (nom. / boost, ton)
Std. arm	2 900	654	(SAE) 10.5 / 11.4, (ISO) 10.8 / 11.7
Short arm	2 400	569	(SAE) 12.2 / 13.2, (ISO) 12.6 / 13.7
Long arm	3 500	796.9	(SAE) 9.4 / 10.2, (ISO) 9.7 / 10.5
SLR arm	6 200	1 059.4	(SAE) 5.9 / 6.4, (ISO) 6.0 / 6.5

Bucket force with standard bucket (nominal pressure / boost, ton)	(SAE) 13.3 / 14.4, (ISO) 15.2 / 16.5

Cab

The new Develon cabin offers unmatched comfort and productivity, featuring a spacious, ergonomic design with excellent visibility and customizable ambient lighting. A 12.8-inch high-resolution monitor provides easy access to machine functions, with options for split or dual screens. The newly designed joystick allows personalized control for smoother operation, while the comfortable, heated seat includes an optional cooling function.

A-weighted emission sound pressure level at the operator's position, LpAd (ISO 6396:2008)	declared: 68 dB (A) measured: 67 dB (A)
A-weighted sound power level, LwAd (2000/14/EC)	declared: 102 dB (A) measured: 101 dB (A)
Whole body vibration	0.42 m/s^2
Hand arm vibration	0.98 m/s^2(L) / 1.04 m/s^2(R)

Drive

Each track is powered by an independent, 2-speeds high-torque axial piston motor, coupled with a planetary reduction gearbox for optimal performance. Two levers/ foot pedals ensure smooth travel with counter-rotation on demand. The track frame protects the travel motor, brake, and planetary gears, while the multi-disc track brakes are spring-applied and hydraulically released for reliable stopping power. Machine could be also by a new joysticks steering functionality.

Travel Motor

Type	axial piston, 2-speed
Displacement	155.4 / 89.8 ml/rev
Crossover relief valve setting	35.8 MPa
Max. supply flow (at 1 700 rpm)	212 l/min

Traveling Performance

Traveling speed (EFF=1.00)	3.1 / 5.4 km/h
Traction force (EFF=1.00)	282.7 / 163.4 kN
Traveling speed (EFF=0.98)	3.1 / 5.3 km/h
Traction force (EFF=0.81)	229.0 / 132.3 kN
Gradeability	70 %

DX230LC-9

Dimensions

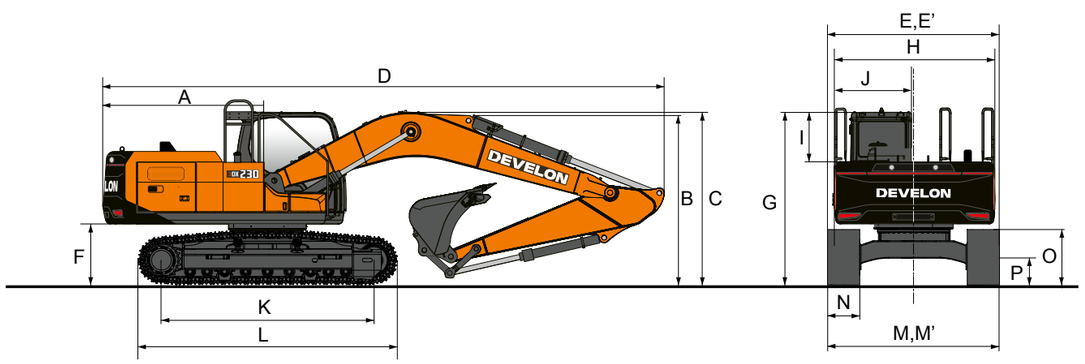

	Unit		Mono boom			SLR boom	Articulated boom	
Boom type	mm		5 700			8 500	5 850	
Arm type	mm		2 900	2 400	3 500	6 200	2 400	2 900
Bucket type (SAE)	m^3		0.92	1.05	0.81	0.39	0.92	0.81
Tail swing radius	mm	A	2 855					
Height with cab (boom)	mm	B	2 910	2 975	3 205	3 225	3 005	
Shipping height (hose)	mm	C	3 065	3 150	3 390	3 340	3 005	
Shipping height with guard rail	mm		3 288					
Shipping length	mm	D	9 580	9 610	9 600	12 290	9 770	9 760
Shipping width (std.)	mm	E/E'	2 990			3 190	2 990	
C/Weight clearance	mm	F	1 095.5					
Height over cab.	mm	G	3 100					
House width	mm	H	2 710					
Cab height above house	mm	I	608					
Cab width	mm	J	1 010					
Tumbler distance	mm	K	3 650					
Track length	mm	L	4 445					
Undercarriage width (std.)	mm	M/M'	2 990					
Shoe width (std.)	mm	N	600					
Track height	mm	O	*883					
Car body clearance	mm	P	*450.5					

* with grouser

Working Range

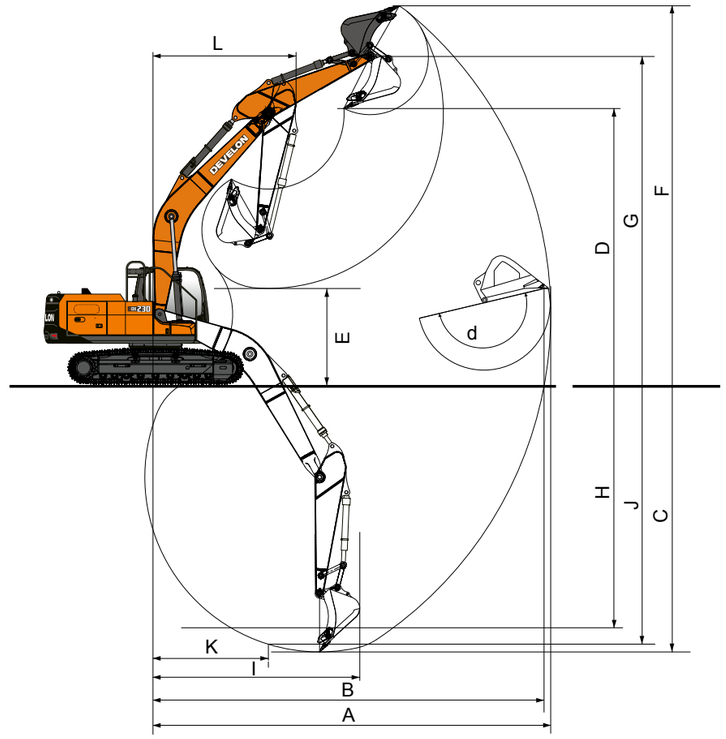

	Unit		Mono boom			SLR boom	Articulated boom	
Boom type	mm		5 700			8 500	5 850	
Arm type	mm		2 900	2 400	3 500	6 200	2 400	2 900
Bucket type	m^3		0.92	1.05	0.81	0.39	0.92	0.81
Max. digging reach	mm	A	9 895	9 475	10 400	15 255	9 725	10 165
Max. digging reach (ground)	mm	B	9 720	9 295	10 235	15 145	9 545	9 995
Max. digging depth	mm	C	6 620	6 115	7 220	11 665	6 020	6 490
Max. loading height	mm	D	6 805	6 665	6 950	10 825	8 090	8 420
Min. loading height	mm	E	2 465	2 980	1 860	1 875	3 985	3 380
Max. digging height	mm	F	9 535	9 425	9 735	13 050	11 020	11 335
Max. bucket pin height	mm	G	8 270	8 130	8 415	12 050	9 555	9 885
Max. vertical wall depth	mm	H	5 790	5 400	6 650	9 725	4 990	5 385
Max. radius vertical	mm	I	6 220	6 030	5 840	9 945	6 355	6 620
Max. depth to 2 500 mm line	mm	J	6 425	5 905	7 045	11 560	5 900	6 380
Min. radius to 2 500 mm line	mm	K	2 825	2 840	2 790	4 695	1 710	
Min. digging reach	mm	L	600	1 760	-161	455	–	
Min. swing radius	mm	M	3 560	3 575	3 615	4 855	2 750	2 620
Bucket angle	deg	d	177		176	171	177	

DX230LC-9
Lifting Capacities

Mono Boom · W/O Bucket

Unit: 1 000 kg

LC Mono Boom 5.70 m · Arm 2.40 m · Shoe 600 mm · Counterweight 4.9 t

A	1.5 m		3.0 m		4.5 m		6.0 m		7.5 m		Max Reach (m)		
B													A
7.5 m											6.44*	6.44*	5.62
6 m							6.52*	6.08*			5.90*	4.93*	6.82
4.5 m					8.32*	8.32*	7.02*	5.93*	6.14*	4.20*	5.76*	4.16*	7.55
3 m					10.28*	8.59*	7.86*	5.69*	6.24	4.12*	5.73	3.80*	7.92
1.5 m					11.83*	8.13*	8.52	5.47*	6.13	4.03*	5.58	3.68*	8.00
0 m					12.32*	7.94*	8.37	5.33*	6.06	3.96*	5.75	3.77*	7.79
-1.5 m			11.27*	11.27*	11.88*	7.92*	8.33	5.30*			6.35	4.14*	7.27
-3 m			14.05*	14.05*	10.48*	8.04*	7.69*	5.39*			6.97*	5.02*	6.35
-4.5 m					7.11*	7.11*					6.34*	6.34*	4.82

LC Mono Boom 5.70 m · Arm 2.90 m · Shoe 600 mm · Counterweight 4.9 t

7.5 m							5.36*	5.36*			4.67*	4.67*	6.20
6 m							5.91*	5.91*			4.35*	4.35*	7.31
4.5 m							6.49*	5.96*	6.00*	4.21*	4.29*	3.79*	7.99
3 m					9.48*	8.67*	7.39*	5.70*	6.22*	4.10*	4.40*	3.47*	8.35
1.5 m					11.26*	8.14*	8.28*	5.44*	6.09*	3.98*	4.69*	3.36*	8.42
0 m			6.58*	6.58*	12.11*	7.85*	8.30*	5.26*	5.99*	3.88*	5.22*	3.43*	8.22
-1.5 m	7.19*	7.19*	11.41*	11.41*	12.00*	7.78*	8.22*	5.19*	5.96*	3.86*	5.73*	3.72*	7.73
-3 m	12.30*	12.30*	15.27*	15.24	10.97*	7.85*	8.16*	5.23*			6.70*	4.40*	6.87
-4.5 m			11.66*	11.66*	8.52*	8.09*					6.52*	6.14*	5.49

LC Mono Boom 5.70 m · Arm 2.90 m · Shoe 700 mm · Counterweight 4.9 t

7.5 m							5.36*	5.36*			4.67*	4.67*	6.20
6 m							5.91*	5.91*			4.35*	4.35*	7.31
4.5 m							6.49*	6.02*	6.00*	4.25*	4.29*	3.83*	7.99
3 m					9.48*	8.76*	7.39*	5.76*	6.29*	4.14*	4.40*	3.51*	8.35
1.5 m					11.26*	8.23*	8.28*	5.50*	6.16*	4.02*	4.69*	3.40*	8.42
0 m			6.58*	6.58*	12.11*	7.94*	8.39*	5.32*	6.06*	3.93*	5.22*	3.47*	8.22
-1.5 m	7.19*	7.19*	11.41*	11.41*	12.00*	7.86*	8.31*	5.25*	6.03*	3.91*	5.79*	3.76*	7.73
-3 m	12.30*	12.30*	15.27*	15.27*	10.97*	7.94*	8.16*	5.29*			6.70*	4.45*	6.87
-4.5 m			11.66*	11.66*	8.52*	8.18*					6.52*	6.21*	5.49

LC Mono Boom 5.70 m · Arm 2.90 m · Shoe 800 mm · Counterweight 4.9 t

7.5 m							5.36*	5.36*			4.67*	4.67*	6.20
6 m							5.91*	5.91*			4.35*	4.35*	7.31
4.5 m							6.49*	6.07*	6.00*	4.30*	4.29*	3.88	7.99
3 m					9.48*	8.85*	7.39*	5.81*	6.36*	4.19*	4.40*	3.55	8.35
1.5 m					11.26*	8.31*	8.28*	5.56*	6.23*	4.07*	4.69*	3.44	8.42
0 m			6.58*	6.58*	12.11*	8.03*	8.49*	5.38*	6.13*	3.97*	5.22*	3.51	8.22
-1.5 m	7.19*	7.19*	11.41*	11.41*	12.00*	7.95*	8.41*	5.31*	6.10*	3.95*	5.86*	3.81	7.73
-3 m	12.30*	12.30*	15.27*	15.27*	10.97*	8.03*	8.16*	5.35*			6.70*	4.50	6.87
-4.5 m			11.66*	11.66*	8.52*	8.27*					6.52*	6.27	5.49

LC Mono Boom 5.70 m · Arm 2.90 m · Shoe 900 mm · Counterweight 4.9 t

7.5 m							5.36*	5.36*			4.67*	4.67*	6.20
6 m							5.91*	5.91*			4.35*	4.35*	7.31
4.5 m							6.49*	6.09*	6.00*	4.31*	4.29*	3.89*	7.99
3 m					9.48*	8.87*	7.39*	5.83*	6.37*	4.20*	4.40*	3.57*	8.35
1.5 m					11.26*	8.34*	8.28*	5.58*	6.25*	4.08*	4.69*	3.45*	8.42
0 m			6.58*	6.58*	12.11*	8.05*	8.52*	5.40*	6.15*	3.99*	5.22*	3.52*	8.22
-1.5 m	7.19*	7.19*	11.41*	11.41*	12.00*	7.98*	8.44*	5.33*	6.12*	3.96*	5.88*	3.82*	7.73
-3 m	12.30*	12.30*	15.27*	15.27*	10.97*	8.05*	8.16*	5.37*			6.70*	4.51*	6.87
-4.5 m			11.66*	11.66*	8.52*	8.29*					6.52*	6.29*	5.49

LC Mono Boom 5.70 m · Arm 3.50 m · Shoe 900 mm · Counterweight 4.9 t

7.5 m											3.93*	3.93*	6.87
6 m									4.72*	4.43*	3.72*	3.72*	7.89
4.5 m							5.87*	5.87*	5.51*	4.36*	3.69*	3.53*	8.52
3 m			12.88*	12.88*	8.53*	8.53*	6.83*	5.90*	5.97*	4.23*	3.79*	3.26*	8.85
1.5 m					10.54*	8.45*	7.84*	5.61*	6.26*	4.08*	4.04*	3.16*	8.92
0 m			7.98*	7.98*	11.78*	8.06*	8.52*	5.39*	6.12*	3.96*	4.48*	3.20*	8.74
-1.5 m	7.04*	7.04*	11.22*	11.22*	12.06*	7.90*	8.38*	5.27*	6.06*	3.90*	5.24*	3.43*	8.27
-3 m	10.94*	10.94*	16.19*	15.33*	11.45*	7.91*	8.38*	5.26*			6.11*	3.94*	7.48
-4.5 m	16.05*	16.05*	13.56*	13.56*	9.68*	8.09*	6.94*	5.41*			6.48*	5.14*	6.24

SLR Boom · W/O Bucket

Unit: 1 000 kg

LC SLR Boom 8.50 m · Arm 6.20 m · Shoe 800 mm · Counterweight 5.3 t

A	1.5 m		3.0 m		4.5 m		6.0 m		7.5 m		9.0 m		10.5 m		12.0 m		13.5 m		Max Reach (m)		
B																					A
12 m																			1.09*	1.09*	9.79
10.5 m													1.69*	1.69*					1.00*	1.00*	11.16
9 m													2.32*	2.32*	1.19*	1.19*			0.95*	0.95*	12.18
7.5 m													2.70*	2.70*	1.98*	1.98*			0.92*	0.92*	12.96
6 m													2.88*	2.76	2.46*	2.15	0.94*	0.94*	0.91*	0.91*	13.52
4.5 m											3.33*	3.33*	3.10*	2.64	2.88*	2.08	1.54*	1.54*	0.93*	0.93*	13.89
3 m					6.93*	6.93*	5.20*	5.20*	4.29*	4.24*	3.73*	3.21	3.36*	2.51	3.10*	1.99	1.91*	1.59	0.96*	0.96*	14.10
1.5 m					8.80*	7.80*	6.22*	5.30*	4.91*	3.90*	4.13*	3.00	3.63*	2.37	3.03	1.90	2.11*	1.54	1.01*	1.01*	14.14
0 m			3.98*	3.98*	7.94*	7.08*	7.04*	4.85*	5.45*	3.61*	4.48	2.81	3.59	2.24	2.94	1.81	2.10*	1.49	1.08*	1.08*	14.02
-1.5 m	3.83*	3.83*	4.83*	4.83*	7.66*	6.74*	7.54*	4.56*	5.58*	3.40*	4.32	2.66	3.48	2.14	2.87	1.75	1.74*	1.45	1.18*	1.18*	13.74
-3 m	4.88*	4.88*	5.88*	5.88*	8.36*	6.63*	7.51*	4.42*	5.44*	3.27*	4.22*	2.56*	3.41	2.07*	2.83*	1.71*			1.32*	1.32*	13.29
-4.5 m	5.98*	5.98*	7.09*	7.09*	9.56*	6.64*	7.46*	4.38*	5.38*	3.22*	4.17*	2.52*	3.38	2.04*	2.82*	1.70*			1.54*	1.54*	12.63
-6 m	7.17*	7.17*	8.48*	8.48*	9.68*	6.76*	7.38*	4.42*	5.40*	3.24*	4.18*	2.53*	3.40	2.06*					1.86*	1.79*	11.75
-7.5 m	8.49*	8.49*	10.13*	10.13*	8.70*	6.96*	6.74*	4.54*	5.40*	3.32*	4.26*	2.60*	2.83*	2.15*					2.44*	2.13*	10.58
-9 m			9.68*	9.68*	7.20*	7.20*	5.66*	4.74*	4.50*	3.48*	3.44*	2.77*							3.41*	2.76*	9.02

LC SLR Boom 8.50 m · Arm 6.20 m · Shoe 900 mm · Counterweight 5.3 t

12 m																			1.09*	1.09*	9.79
10.5 m													1.69*	1.69*					1.00*	1.00*	11.16
9 m													2.32*	2.32*	1.19*	1.19*			0.95*	0.95*	12.18
7.5 m													2.70*	2.70*	1.98*	1.98*			0.92*	0.92*	12.96
6 m													2.88*	2.77	2.46*	2.16	0.94*	0.94*	0.91*	0.91*	13.52
4.5 m											3.33*	3.33*	3.10*	2.65	2.88*	2.08	1.54*	1.54*	0.93*	0.93*	13.89
3 m					6.93*	6.93*	5.20*	5.20*	4.29*	4.25*	3.73*	3.22	3.36*	2.51	3.10*	2.00	1.91*	1.60	0.96*	0.96*	14.10
1.5 m					8.80*	7.82*	6.22*	5.32*	4.91*	3.91*	4.13*	3.01	3.63*	2.37	3.04	1.91	2.11*	1.54	1.01*	1.01*	14.14
0 m			3.98*	3.98*	7.94*	7.10*	7.04*	4.87*	5.45*	3.62*	4.50*	2.82	3.60	2.25	2.96	1.82	2.10*	1.49	1.08*	1.08*	14.02
-1.5 m	3.83*	3.83*	4.83*	4.83*	7.66*	6.76*	7.54*	4.58*	5.60	3.41*	4.34	2.67	3.49	2.15	2.89	1.76	1.74*	1.46	1.18*	1.18*	13.74
-3 m	4.88*	4.88*	5.88*	5.88*	8.36*	6.65*	7.54*	4.44*	5.46*	3.29*	4.24*	2.57*	3.42*	2.08*	2.84*	1.72*			1.32*	1.32*	13.29
-4.5 m	5.98*	5.98*	7.09*	7.09*	9.56*	6.67*	7.49*	4.40*	5.40*	3.24*	4.19*	2.53*	3.39*	2.05*	2.84*	1.71*			1.54*	1.54*	12.63
-6 m	7.17*	7.17*	8.48*	8.48*	9.68*	6.78*	7.38*	4.44*	5.42*	3.25*	4.20*	2.54*	3.41*	2.07*					1.86*	1.80*	11.75
-7.5 m	8.49*	8.49*	10.13*	10.13*	8.70*	6.98*	6.74*	4.55*	5.40*	3.33*	4.28*	2.61*	2.83*	2.16*					2.44*	2.14*	10.58
-9 m			9.68*	9.68*	7.20*	7.20*	5.66*	4.76*	4.50*	3.50*	3.44*	2.78*							3.41*	2.77*	9.02

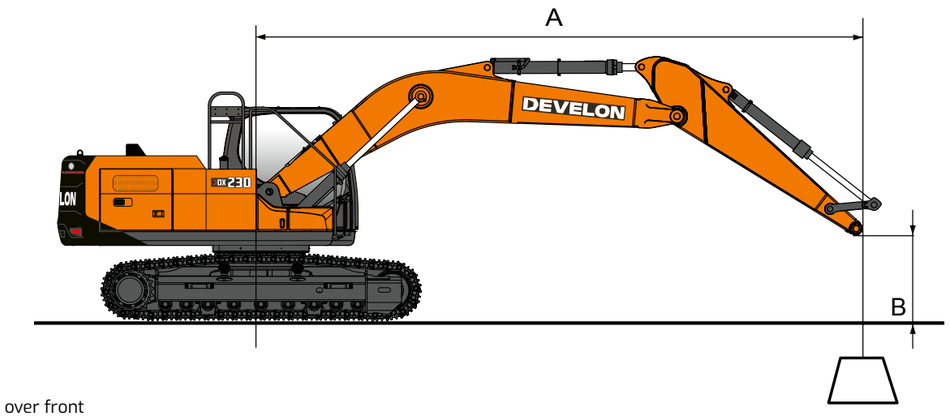

= Rating over front

= Rating over side or 360°

1. At the arm end, without bucket (unit : 1 000 kg)
2. Capacities marked with an asterisk (*) are limited by hydraulic capacities.
3. Lift capacities shown do not exceed 75 % of minimun tipping loads or 87 % of hydraulic capacities.
4. The least stable position is over the side.
5. Lift capacities are based on the machine's original design and standard equipment from the manufacturer.
6. Lift capacities are in compliance with ISO 10567.
7. Machine in "power boost" mode for lifting capacities.

DX230LC-9
Standard & Optional Equipment

Engine

DX05V — Common rail 4-cylinder engine (5 018 cc) with direct fuel injection and electronic control; 4 valves per cylinder; vertical injectors; water-cooled; twin-turbocharged with air-to-air intercooler	■
Stage V compliant with selective catalyst reduction (SCR), diesel oxidation catalyst (DOC), and diesel particulate filter (DPF)	■
Smart Power Control 3rd generation (SPC3)	■
141 kW (189 hp) at 1 700 rpm (SAE J1995)	■
Max torque: 97.4 kgf·m at 1 400 rpm	■
2 × 12 V / 150 Ah batteries; starter 24 V, 6 kW, 90 A	■

Hydraulic

e-EPOS for optimized system efficiency in all working conditions and minimized fuel consumption	■
Main pumps: 2 variable displacement axial piston pumps — max flow: 2 × 212 l/min	■
Pilot pump: gear pump — max flow: 27 l/min	■
Maximum system pressure: work 373 kg/cm², travel 358 kg/cm²	■
Selection of 4 working modes and 4 power modes	■
D-Eco power management system with FEH, including 2-pump flow	■
Hydraulic flow and pressure rate controlled from the cab	■
Boom and arm flow regeneration valves	■
Boom and arm holding valves	■
Hydraulic piping for breaker	■
2 travel speeds: 3.1 – 5.4 km/h	■
Breaker piping with return line filter	•
PERO — low flow auxiliary hydraulic line for rotating or tilting tool (joystick control)	•
Clamshell piping (diverter valve)	•

Frame

X-frame long track: 2 990 mm with 600 mm shoes	■
Hydraulic track adjuster with shock-absorbing tension mechanism	■

Cab and Interior

Pressurized, sound-insulated, and CabSus-mounted cab	■
New 12-inch Android color LCD gauge panel with touch-enabled display	■
High-performance air conditioning with electronic climate control	■
DAB radio with Bluetooth streaming and a hands-free system	■
Sliding proportional control on joystick for auxiliary hydraulic lines	■
USB port	■
Stick steer (joystick steering functionality)	■
Falling Objects Guard System (FOGS) — standard ISO 10262 level II and SAE J1356[1]	•
Straight travel pedal (only available with monoboom)	•
Heat wire for main mirror	•
Heating & cooling seat with 3-point seat belt	•
Full smart package: Machine Guidance 2D, Smart Control 2D, virtual walls, weighing system, Smart AVM, HDS, and Advanced Lift Assist	•
Productivity package: Machine Guidance 2D, Smart Control 2D, weighing system, Lift Assist, virtual walls	•
Smart AVM	•
HDS (Human Detection System) with around-view camera and radar	•
Emergency stop (E-Stop)[2]	•
Smart Key with Digital Key (app)	•
Premium PHM (hydraulic oil and engine oil monitoring, including swing motor/reduction gear and main pump monitoring algorithm)	•
Additional 12-inch Android monitor	•

Other

Dozer blade options: · 2 990 mm for 600 mm shoes · 3 090 mm for 700 mm shoes · 3 190 mm for 800 mm shoes	•
Articulated boom: 5.85 m	•
Arm options: · 2.40 m arm · 2.90 m arm · 3.50 m arm (only available with monoboom)	•
Track shoe options: · 700 mm triple grouser shoes · 800 mm triple grouser shoes · 900 mm triple grouser shoes	•
Breaker piping with return line filter	•
PERO — low flow auxiliary hydraulic line for rotating or tilting tool (joystick control)	•
Clamshell piping (diverter valve)	•
Air compressor	•
Reversible cooling fan	•
SKF system with 2 kg pump & bucket connection—available on monoboom and artiboom	•
Groeneveld Twin Heavy Duty system (includes bucket linkage greasing, 4 kg twin pump, control unit, twin display) — available on monoboom and artiboom	•

Standard Configuration

Standard fixed undercarriage: 2 990 mm without dozer	■
5.70 m boom — 2.90 m arm — 600 mm triple grouser shoes — no bucket	■
PE3C — 2-way auxiliary hydraulic line for opening/closing tool (electric CAN communication pedal & joystick)	■
Breaker piping (1-way auxiliary hydraulic line including floating boom and Smart Breaker)	■
Safety valves (boom & arm)	■
Counterweight: 4.9 tons	■
Light Pack: full LED pack, rotating beacon, 90 A alternator	■
Side and rear-view cameras	■
Quick coupler piping	■
Transport dimensions: 9 580 (L) × 3 100 (H) × 2 990 (W) mm	■
Side mirror	■
Fuel filling pump	■
Mineral hydraulic oil ISO VG 46	■
Roll Over Protective Structure (ROPS) — standard ISO 12117-2	■
Separable guard rails — standard ISO 2867:2011	■
Cab pack: sun visor, roof window, and rain shield	■
Fully adjustable air suspension seat with heater	■
Overload warning device	■
Parallel wipers	■
My Develon (telematics system)	■
1-year warranty or 2 000 hours (whichever occurs first)	■

[1] If FOGS cab is ordered, rain shield is not delivered (not compatible)
[2] Will be available later in 2026

Standard = ■
Optional = •

DX260LC-9
Technical Specifications

Engine

Designed to deliver superior performance and best in class fuel efficiency, the Develon DX05V diesel engine fully meets the latest Stage V emission regulations. To optimize machine performance, it features high-pressure fuel injectors, twin turbo chargers with air-to-air intercooler, and electronic engine controls. It also includes a 4-cycle water-cooled system, and common rail direct injection.

Model	Develon DX05V
Number of cylinders	4
Rated power (at 1 900 rpm)	171.1 kW / 229.4 hp (SAE J1995)
Maximum torque (at 1 400 rpm)	97.4 kgf-m
Displacement	5 018 cm^3
Batteries – Alternator	2 × 12 V, 150 Ah - 24 V, 90 A

Undercarriage

Built for durability, the undercarriage features an extremely robust construction made from high-quality materials. All welded structures are designed to minimize stress, ensuring long-lasting performance.

- Track rollers lubricated for life
- Idlers and sprockets fitted with floating seals
- Track shoes made of induction-hardened alloy with triple grouser
- Heat-treated connecting pins
- Hydraulic track adjuster with shock-absorbing tension wheel

Upper rollers	2, shaft
Upper roller diameter	142 mm
Lower rollers	9, single
Lower roller diameter	160 mm
Number of links & shoes per side	51
Pin diameter	38 mm
Link pitch	190 mm
Bushing diameter	59.41 mm
Track gauge std. / narrow	2 600 / 2 400 mm
Tumbler distance	3 835

Track Shoe

Shoe width (mm)	Ground pressure (kgf/cm^2)	Machine weight (ton)
Std. 600G	0.53	26.8
Opt. 700G	0.46	27.1
Opt. 800G	0.41	27.4
Opt. 900G	0.37	27.7

Hydraulic System

The new model features a full electro hydraulic (FEH) system that offers precise control through advanced software. Paired with the edge cloud computing (ECC) platform, the system allows for easy remote software updates, keeping it up to date with the latest features. The FEH system collects and analyzes real-time data to optimize efficiency and productivity, making it a smarter, more responsive system in any working condition.

Pumps	Type	Max. flow rate	Displacement
Main	2 × swash plate, axial piston	2 × 237.5 l/min	2 × 125 ml/rev

Swing Mechanism

The swing mechanism features an axial piston motor that drives a 2-stage planetary reduction gear, fully immersed in oil for maximum torque.

- Swing bearing: Single-row, shear-type ball bearing with an induction-hardened internal gear
- Internal gear and pinion: Immersed in lubricant for enhanced durability and smooth operation

Swing Motor

Type	axial piston
Displacement	142.8 ml/rev
Crossover relief valve setting	28 MPa
Max. supply flow (at 1 950 rpm)	243.7 l/min
Max. output torque	1 754 kgf.m

Swing Performance

Max. swing speed (EFF=1.00)	10.6 rpm
Max. swing torque (EFF=1.00)	100.8 kN.m
Act. swing speed (EFF=0.98)	10.4 rpm
Act. swing torque (EFF=0.81)	81.6 kN.m

Arm

	Length (mm)	Weight (kg)	Digging force (nom. / boost, ton)
Std. arm	3 000	789	(SAE) 12.6 / 13.7, (ISO) 13.1 / 14.2
Short arm	2 500	680	(SAE) 15.2 / 16.5, (ISO) 15.9 / 17.2
Long arm	3 500	894	(SAE) 11.6 / 12.6, (ISO) 12.0 / 13.1

Bucket force with standard bucket (nominal pressure / boost, ton)	(SAE) 15.6/16.9, (ISO) 18.2/19.8

Cab

The new Develon cabin offers unmatched comfort and productivity, featuring a spacious, ergonomic design with excellent visibility and customizable ambient lighting. A 12.8-inch high-resolution monitor provides easy access to machine functions, with options for split or dual screens. The newly designed joystick allows personalized control for smoother operation, while the comfortable, heated seat includes an optional cooling function.

A-weighted emission sound pressure level at the operator's position, LpAd (ISO 6396:2008)	declared: 70 dB (A) measured: 69 dB (A)
A-weighted sound power level, LwAd (2000/14/EC)	declared: 103 dB (A) measured: 102 dB (A)
Whole body vibration	0.45 m/s^2
Hand arm vibration	0.78 m/s^2(L) / 0.66 m/s^2(R)

Drive

Each track is powered by an independent, 2-speeds high-torque axial piston motor, coupled with a planetary reduction gearbox for optimal performance. Two levers/ foot pedals ensure smooth travel with counter-rotation on demand. The track frame protects the travel motor, brake, and planetary gears, while the multi-disc track brakes are spring-applied and hydraulically released for reliable stopping power. Machine could be also by a new joysticks steering functionality.

Travel Motor

Type	axial piston, 2-speed
Displacement	155.4 / 89.8 ml/rev
Crossover relief valve setting	35.8 MPa
Max. supply flow (at 1 850 rpm)	237.5 l/min

Traveling Performance

Traveling speed (EFF=1.00)	3.4 / 5.8 km/h
Traction force (EFF=1.00)	282.7 / 163.4 kN
Traveling speed (EFF=0.98)	3.3 / 5.7 km/hr
Traction force (EFF=0.81/0.65)	229.0 / 132.3 kN
Greadeability	70 %

DX260LC-9

Dimensions

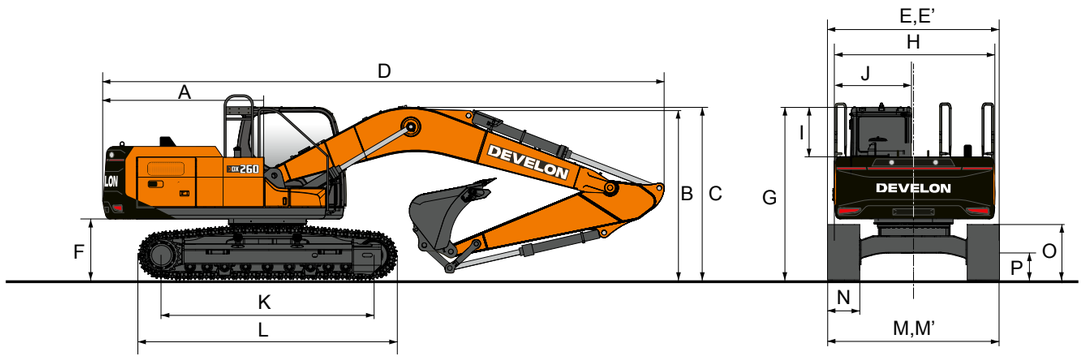

	Unit		Mono boom			Articulated boom		
Boom type	mm		5 900			6 090		
Arm type	mm		3 000	2 500	3 500	3 000	2 500	3 500
Bucket type (SAE)	m³		1.10	1.17	0.92	1.10	1.17	0.92
Tail swing radius	mm	A	3 040					
Shipping height (boom)	mm	B	3 016	3 080	3 379	3 113	3 094	3 459
Shipping height (hose)	mm	C	3 237	3 344	3 597	3 113	3 094	3 507
Shipping height with guard rail	mm		3 304					
Shipping length	mm	D	10 085	10 145	10 110	10 265	10 290	10 195
Shipping width (std.)	mm	E/E'	3 200					
Shipping width (narrow)	mm	E/E''	3 000					
C/Weight clearance	mm	F	1 111.5					
Height over cab	mm	G	3 121					
Height over cab (without roof)	mm		3 091					
House width	mm	H	2 710					
Cab height above house	mm	I	624					
Cab width	mm	J	1 010					
Tumbler distance	mm	K	3 835					
Track length	mm	L	4 630					
Undercarriage width (std.)	mm	M/M'	3 200					
Undercarriage width (narrow)	mm	M/M'	3 000					
Shoe width (std.)	mm	N/N'	600					
Shoe width (narrow)	mm	N/N'	600					
Track height	mm	O	*940					
Car body clearance	mm	P	*424					

* with grouser

Working Range

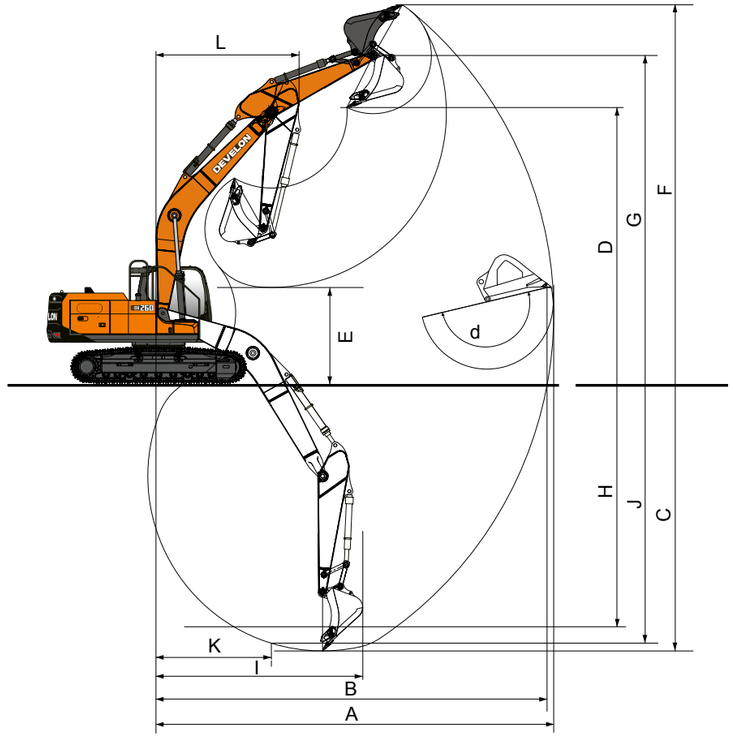

	Unit		Mono boom			Articulated boom		
Boom type	mm		5 900			6 090		
Arm type	mm		3 000	2 500	3 500	3 000	2 500	3 500
Bucket type (SAE)	m³		1.17		1.05	1.17		1.05
Max. digging reach	mm	A	10 170	9 645	10 600	10 480	9 950	10 930
Max. digging reach (ground)	mm	B	9 990	9 450	10 430	10 305	9 760	10 760
Max. digging depth	mm	C	6 810	6 305	7 310	6 730	6 205	7 205
Max. loading height	mm	D	7 025	6 650	7 170	8 685	8 155	8 960
Min. loading height	mm	E	2 600	3 105	2 090	3 500	4 100	3 095
Max. digging height	mm	F	9 770	9 355	9 890	11 580	11 060	11 875
Max. bucket pin height	mm	G	8 490	8 120	8 640	10 115	9 620	10 430
Max. vertical wall depth	mm	H	5 935	5 190	6 275	5 655	5 055	6 075
Max. vertical radius	mm	I	6 375	6 460	6 640	6 615	6 625	6 835
Max. depth to 2 500 mm line	mm	J	6 615	6 040	7 135	6 625	6 090	7 105
Min. radius to 2 500 mm line	mm	K	2 925	2 845	2 910	1 675		
Min. digging reach	mm	L	690	1 870	195	–		
Min. swing radius	mm	M	3 715	3 730	3 755	2 940	3 080	3 280
Bucket angle	deg	d	174		175	174		175

DX260LC-9
Lifting Capacities

Mono Boom · W/O Bucket

Unit: 1 000 kg

A	1.5 m		3.0 m		4.5 m		6.0 m		7.5 m		9.0 m		Max Reach (m)		
B															A
LC Mono Boom 5.90 m · Arm 3.0 m · Shoe 600 mm · Counterweight 5.5 t															
7.5 m							6.60*	6.60*					5.26*	5.26*	6.66
6 m							6.75*	6.75*	5.91*	5.31			4.99*	4.99*	7.68
4.5 m					8.87*	8.87*	7.53*	7.38	6.87*	5.23			4.95*	4.43	8.32
3 m					11.27*	10.77*	8.65*	7.05	7.39*	5.08			5.11*	4.10	8.64
1.5 m					13.31*	10.14*	9.72*	6.74	7.31	4.93			5.46*	3.99	8.69
0 m			7.56*	7.56*	14.23*	9.82*	9.99	6.53	7.18	4.81			6.03	4.07	8.48
-1.5 m	8.67*	8.67*	13.13*	13.13*	14.09*	9.74*	9.89	6.44	7.14	4.77			6.55	4.41	7.98
-3 m	14.38*	14.38*	18.00*	18.00*	12.97*	9.82*	9.73*	6.49					7.69*	5.17	7.14
-4.5 m			14.12*	14.12*	10.41*	10.08*							7.61*	7.04	5.80
NLC Mono Boom 5.90 m · Arm 3.0 m · Shoe 600 mm · Counterweight 5.5 t															
7.5 m							6.60*	6.60*					5.26*	5.26*	6.66
6 m							6.75*	6.75*	5.91*	4.90			4.99*	4.70	7.68
4.5 m					8.87*	8.87*	7.53*	6.79	6.87*	4.83			4.95*	4.08	8.32
3 m					11.27*	9.81	8.65*	6.47	7.39*	4.68			5.11*	3.77	8.64
1.5 m					13.31*	9.20	9.72*	6.17	7.28	4.53			5.46*	3.66	8.69
0 m			7.56*	7.56*	14.23*	8.89	9.96	5.97	7.16	4.41			6.01	3.74	8.48
-1.5 m	8.67*	8.67*	13.13*	13.13*	14.09*	8.81	9.86	5.88	7.12	4.37			6.53	4.04	7.98
-3 m	14.38*	14.38*	18.00*	17.28*	12.97*	8.89	9.73*	5.92					7.69*	4.74	7.14
-4.5 m			14.12*	14.12*	10.41*	9.14							7.61*	6.44	5.80
LC Mono Boom 5.90 m · Arm 3.50 m · Shoe 600 mm · Counterweight 5.5 t															
7.5 m													4.71*	4.71*	7.21
6 m									6.09*	5.39			4.52*	4.52*	8.17
4.5 m							6.98*	6.98*	6.44*	5.29			4.52*	4.10	8.76
3 m					10.41*	10.41*	8.16*	7.16	7.03*	5.13	5.10*	3.86	4.68*	3.81	9.07
1.5 m					12.68*	10.3*	9.34*	6.81	7.34	4.95	5.58	3.79	5.00*	3.71	9.12
0 m			8.75*	8.75*	13.97*	9.87*	10.03	6.56	7.19	4.81			5.55*	3.78	8.92
-1.5 m	8.33*	8.33*	12.86*	12.86*	14.20*	9.71*	9.89	6.43	7.11	4.74			6.01	4.05	8.45
-3 m	13.02*	13.02*	18.76*	18.76*	13.46*	9.74*	9.89	6.43	7.14	4.77			6.94	4.65	7.66
-4.5 m	19.07*	19.07*	15.95*	15.95*	11.49*	9.95*	8.40*	6.58					7.51*	6.02	6.43
NLC Mono Boom 5.90 m · Arm 3.50 m · Shoe 600 mm · Counterweight 5.5 t															
7.5 m													4.71*	4.71*	7.21
6 m									6.09*	4.98			4.52*	4.29	8.17
4.5 m							6.98*	6.91	6.44*	4.88			4.52*	3.77	8.76
3 m					10.41*	10.06	8.16*	6.58	7.03*	4.72	5.10*	3.55	4.68*	3.50	9.07
1.5 m					12.68*	9.36	9.34*	6.24	7.32	4.55	5.57	3.48	5.00*	3.41	9.12
0 m			8.75*	8.75*	13.97*	8.94	10.00	5.99	7.17	4.41			5.55*	3.46	8.92
-1.5 m	8.33*	8.33*	12.86*	12.86*	14.20*	8.78	9.86	5.87	7.09	4.34			5.99	3.71	8.45
-3 m	13.02*	13.02*	18.76*	17.08*	13.46*	8.81	9.86	5.86	7.12	4.37			6.92	4.26	7.66
-4.5 m	19.07*	19.07*	15.95*	15.95*	11.49*	9.01	8.40*	6.02					7.51*	5.51	6.43

Articulated Boom · W/O Bucket

Unit: 1 000 kg

A	3.0 m		4.5 m		6.0 m		7.5 m		9.0 m		Max Reach (m)		
B													A
LC Articulated Boom 6.09 m · Arm 3.0 m · Shoe 600 mm · Counterweight 5.5 t													
9 m			7.67*	7.67*							5.66*	5.66*	5.53
7.5 m					7.27*	7.27*					4.89*	4.89*	7.06
6 m			7.50*	7.50*	7.89*	7.55*	6.74*	5.23*			4.58*	4.58*	8.03
4.5 m			11.31*	11.31*	8.99*	7.25*	7.03*	5.12*			4.49*	4.04*	8.64
3 m			13.04*	10.49*	9.75*	6.87*	7.39*	4.94*			4.56*	3.75*	8.95
1.5 m			13.98*	9.80*	10.08*	6.53*	7.19*	4.76*	4.84*	3.66*	4.79*	3.66*	9.00
0 m			13.61*	9.49*	9.83*	6.31*	7.06*	4.64*			5.22*	3.74*	8.80
-1.5 m	10.12*	10.12*	12.17*	9.45*	9.39*	6.23*	7.02*	4.61*			5.79*	4.04*	8.32
-3 m			9.72*	9.58*	7.61*	6.30*	5.05*	4.72*			4.99*	4.70*	7.52
NLC Articulated Boom 6.09 m · Arm 3.0 m · Shoe 600 mm · Counterweight 5.5 t													
9 m			7.67*	7.67*							5.66*	5.66*	5.53
7.5 m					7.27*	7.06*					4.89*	4.89*	7.06
6 m			7.50*	7.50*	7.89*	6.95*	6.74*	4.81*			4.58*	4.24*	8.03
4.5 m			11.31*	10.37*	8.99*	6.66*	7.03*	4.70*			4.49*	3.70*	8.64
3 m			13.04*	9.52*	9.75*	6.28*	7.36*	4.53*			4.56*	3.43*	8.95
1.5 m			13.98*	8.85*	10.05*	5.95*	7.17*	4.35*	4.84*	3.34*	4.79*	3.34*	9.00
0 m			13.61*	8.55*	9.80*	5.73*	7.04*	4.23*			5.22*	3.41*	8.80
-1.5 m	10.12*	10.12*	12.17*	8.51*	9.39*	5.66*	7.00*	4.20*			5.79*	3.69*	8.32
-3 m			9.72*	8.63*	7.61*	5.72*	5.05*	4.31*			4.99*	4.3*	7.52

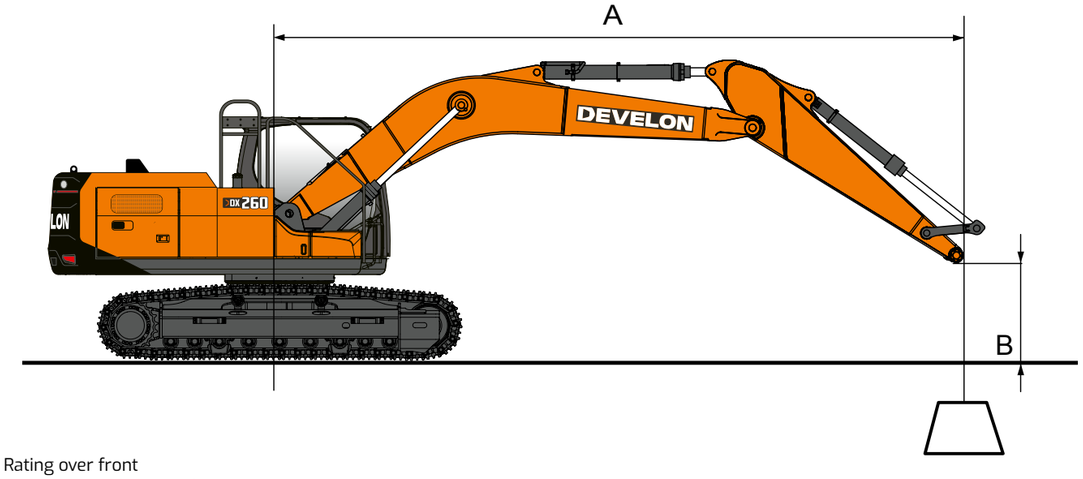

= Rating over front
= Rating over side or 360°

1. At the arm end, without bucket (unit : 1 000 kg)
2. Capacities marked with an asterisk (*) are limited by hydraulic capacities.
3. Lift capacities shown do not exceed 75 % of minimun tipping loads or 87 % of hydraulic capacities.
4. The least stable position is over the side.
5. Lift capacities are based on the machine's original design and standard equipment from the manufacturer.
6. Lift capacities are in compliance with ISO 10567.
7. Machine in "power boost" mode for lifting capacities.

DX260LC-9
Standard & Optional Equipment

Engine

DX05V — Common rail 4-cylinder engine (5 018 cc) with direct fuel injection and electronic control; 4 valves per cylinder; vertical injectors; water-cooled; twin-turbocharged with air-to-air intercooler	■
Stage V compliant with selective catalyst reduction (SCR), diesel oxidation catalyst (DOC), and diesel particulate filter (DPF)	■
Smart Power Control 3rd generation (SPC3)	■
171 kW (229 hp) at 1 700 rpm (SAE J1995)	■
Max torque: 97.4 kgf·m at 1 400 rpm	■
2 × 12 V / 150 Ah batteries; starter 24 V, 6 kW	■

Hydraulic

e-EPOS for optimized system efficiency in all working conditions and minimized fuel consumption	■
Main pumps: 2 variable displacement axial piston pumps — max flow: 2 × 237.5 l/min	■
Pilot pump: gear pump — max flow: 27 l/min	■
Maximum system pressure: work 373 kg/cm², travel 358 kg/cm²	■
Selection of 4 working modes and 4 power modes	■
D-Eco power management system with FEH, including 2-pump flow	■
Hydraulic flow and pressure rate controlled from the cab	■
Boom and arm flow regeneration valves	■
Boom and arm holding valves	■
Hydraulic piping for breaker	■
2 travel speeds: 3.4 – 5.9 km/h	■
Turbo centrifugal air pre-cleaning	■
Breaker piping with return line filter	•
PERO — low flow auxiliary hydraulic line for rotating or tilting tool (joystick control)	•
Clamshell piping (diverter valve)	•

Frame

X-frame long track: 3 200 mm with 600 mm shoes	■
Hydraulic track adjuster with shock-absorbing tension mechanism	■

Cab and Interior

Pressurized, sound-insulated, and CabSus-mounted cab	■
New 12-inch Android color LCD gauge panel with touch-enabled display	■
High-performance air conditioning with electronic climate control	■
DAB radio with Bluetooth streaming and a hands-free system	■
Sliding proportional control on joystick for auxiliary hydraulic lines	■
USB port	■
Direct measurement of fuel consumption from control panel	■
Stick steer (joystick steering functionality)	■
Heat wire for main mirror	•
Heating & cooling seat with 3-point and 4-point seat belt	•
Reversible cooling fan	•
Full smart package: Machine Guidance 2D, Smart Control 2D, virtual walls, weighing system, Smart AVM, HDS, and Advanced Lift Assist	•
Productivity package: Machine Guidance 2D, Smart Control 2D, weighing system, Lift Assist, virtual walls	•
Smart AVM	•
HDS (Human Detection System) with around-view camera and radar	•
Emergency stop (E-Stop)[1]	•
Smart Key with Digital Key (app)	•
Premium PHM (hydraulic oil and engine oil monitoring, including swing motor/reduction gear and main pump monitoring algorithm)	•
Additional 12-inch Android monitor	•

Other

Narrow fixed undercarriage: 3 000 mm	•
Articulated boom: 6.09 m	•
Arm options: 2.50 m arm 3.00 m arm 3.50 m arm	•
Shoe options: 700 mm 800 mm 900 mm triple grouser shoes	•
Air compressor	•
SKF with 2 kg pump and bucket connection	•
Groeneveld Twin Heavy Duty system (includes bucket linkage greasing, 4 kg twin pump, control unit, and twin display)	•

Standard Configuration

Standard fixed undercarriage: 3 200 mm	■
5.90 m boom — 3.00 m arm — 600 mm triple grouser shoes	■
PE3C — 2-way auxiliary hydraulic line for opening/closing tools (electric CAN communication via pedal and joystick)	■
Breaker piping – 1-way auxiliary hydraulic line including floating boom and Smart Breaker	■
Boom and arm safety valves	■
Counterweight: 5.5 tons	■
Light Pack: Full LED pack + rotating beacon, 90 A alternator	■
Side and rear-view cameras	■
Quick coupler line	■
Transport dimensions: 10 085 (L) × 3 200 (W) × 3 100 (H) mm	■
Operating weight: 26 300 kg	■
Side mirror	■
Fuel filling pump	■
Mineral hydraulic oil ISO VG 46	■
ROPS (Roll Over Protective Structure) – standard (ISO 12117-2)	■
Separable guard rails (ISO 2867:2011)	■
Cab pack: sun visor, roof window, and rain shield	■
Fully adjustable air suspension seat with heater	■
Overload warning device	■
Parallel wipers	■
My Develon (telematics system)	■
1-year / 2 000-hour warranty (whichever comes first)	■

[1] Will be available later in 2026

Standard = ■
Optional = •



Develon Warranty

Your Key to Equipment Protection and Peace of Mind

Keep your heavy construction equipment protected with Develon. Our comprehensive warranties and premium protection plans give you peace of mind, ensuring your investment stays safe and valuable for the road ahead.

Tailored Warranty Plans
Choose from a range of affordable protection plans, designed exclusively for Develon customers through our authorized dealers. These plans transform your machine's price into a strategic investment, not just an expense.

Develon Premium Protection
Opt for Develon Premium to experience unmatched security, reliability, and overall value. This top-tier plan shields your equipment from unexpected costs and minimizes downtime, letting you focus on what matters – getting the job done.

Act Now!
Get in touch with a Develon authorized dealer today to protect your equipment investment. With an easy process and lasting benefits, Develon helps keep your heavy construction equipment in top condition.

Choose Develon Extended Warranty: Play it Safe and Protect Your Investment.

** Offer may vary based on model.*

Powered by **Innovation**

HD Hyundai Infracore Europe s.r.o.
IBC – Pobrezni 620/3,
18600 Praha 8 – Karlin, Czechia

DEVELON

©2025 HD Hyundai Infracore. All rights reserved.

D-4600896 (06/2025)

Certain specifications are based on engineering calculations and are not actual measurements. Specifications are provided for comparison purposes only and are subject to change without notice. Specifications for your individual Develon equipment will vary based on normal variations in design, manufacturing, operating conditions, and other factors. Pictures of Develon units may show equipment other than standard equipment.