DEVELON

Wheeled Excavators

DX210W-7



Maximum power	189 hp
Operating weight	21.9 t
Bucket capacity	0.86 m^3


DEVELON



DEVELON DX210W-7 WHEELED EXCAVATOR:

AN ALL-ROUND IMPRESSIVE PACKAGE

Develon's new DX210W-7 Wheeled Excavator offers a host of redesigned features and new technologies to ensure smooth operation, superior productivity and stability, top-class operator comfort and improved fuel efficiency.

This powerful machine will give your job site a huge boost.

RAISE PROFITS, PRODUCTIVITY & FUEL EFFICIENCY

SUPERIOR STABILITY

Rock-solid in every moment. Thanks to optimized weight distribution, longer wheelbase cast counterweight and optional heavier counterweights for the biggest attachments, the DX-7 Series offers excellent stability for confidence and peace of mind in all situations.

RELIABILITY

Reinforced castings and forged steel pivot points and reinforced heavy-duty arm and boom to withstand high-impact materials. Monoboom or articulated boom for added versatility. Improved hydraulic line routing to protect your investment.

YOUR SAFETY IS OUR PRIORITY

Rear and right side cameras as standard, anti-slip steps and platforms, as well as guard rails on upper structure.
Optional: a 360° all-around view camera (AVM) can be linked with unique ultrasonic detection for maximum safety while working with people around.
Large side mirrors, 7 powerful LED work lights (4 additional lights possible as an option), travel alarm.

PRODUCTIVITY

The highest hydraulic capacity in its class in the market – with 2 × 236 l/min for various applications. This extra power is available for any attachments you use and work you need to do.
Automatic digging brake, electric joystick steering, and Load Isolation System (LIS) for better ride control.



TOTAL CONTROL

Enjoy significantly reduced shock and better productivity when handling loads. Thanks to our switchable Fine Swing feature, you avoid bumps at the start and end of any boom movement (only recommended on flat surfaces).
To increase accuracy, engage the Tilt Rotator mode, which enables smart distribution of hydraulic flow to eliminate back pressure.

COMFORTABLE RIDE

Bumpy terrain ahead? We have you covered. Our switchable Load Isolation System largely mitigates the impact of bumps on the cab. You enjoy a smooth ride, increased productivity and improved safety even on bumpy ground.

EFFORTLESS OPERATION

Make work a breeze with switchable electric steering. With this option, you use a thumbwheel to steer the machine without taking your hand off the joystick.



UNRIVALLED COMFORT

One of the most spacious cabs in the market, with low noise & vibration levels and excellent all-round visibility. Thanks to the premium seat's heating, and even an optional cooling functionality, and improved air ventilation in the DX210W-7, you can focus on the job at hand under all conditions.

OPERATE AT EASE

New Develon Smart Touch screen – an easy to read and use 8" touch screen – integrates all functions and settings of your machine in one place. Don't miss any important call thanks to the hands-free phone system. And forget fumbling with keyholes: unlock the door remotely, and start or stop the engine with the included Develon Smart Key.

NEW DEVELON ENGINE

Exceptionally powerful – with high torque at low revs – the new Develon engine combines reliability and low environmental impact. This Stage V compliant 6 cylinder engine delivers 189 hp at 1900 rpm.

FULL CONTROL OVER FUEL CONSUMPTION

The latest evolution of the legendary Stage V Develon DL06V engine, with significantly improved fuel economy thanks to a new travel mode using the flow of 2 pumps, automatically adjusts the required engine power and engine rpm to avoid lost energy. Take full control over your fuel consumption with a settable engine shut off and the automatic Smart Power Control (SPC). Easy on your wallet and the environment.

EASY MAINTENANCE

Maintenance data are directly available from the control panel. Easy access to filters from ground level. To protect coolers and minimize downtime, the cooling compartment is equipped with fine mesh for the intake air. These innovations make maintenance operations a pleasure.

AUTOMATIC DIGGING BRAKE

Activate the Auto Digging Brake function by pressing the button on the control switch. This function automatically holds the service brake when the vehicle stops (zero speed) without the operator stepping on the brake. When the transmission pedal is pressed, the brake is automatically released.


STAGE V
COMPLIANT
DEVELON
20
DX 210 W



TOP PERFORMANCE AND FUEL EFFICIENCY

THE POWER TO RAISE PRODUCTIVITY

- The DX210W-7 is equipped with the latest generation Develon engine
- Stage V compliant, this engine boasts extremely low emissions because reducing our environmental impact is paramount to us
- Exhaust gases are purified by Selective Catalytic Reduction (SCR) technology, a Diesel Oxidation Catalyst (DOC) and a Diesel Particulate Filter (DPF)

EFFICIENT FUEL MANAGEMENT

- Choice of 4 power modes (Eco - Standard - Power - Power Plus) and automatic Smart Power Control system for optimal power and reduced fuel consumption in all conditions
- Smart Power Control (SPC) system: reduces engine speed and adjusts pump torque according to work conditions. The system automatically adjusts engine power and hydraulic output to improve fuel efficiency and reduce emissions
- New traveling mode, using the flow of the 2 hydraulic pumps, to reduce the engine rpm and fuel consumption
- Engine auto-shut-off: shuts down the engine after the machine has been idling for a specified time. The operator can set the delay before shut-off via the Develon Smart Touch screen

VARIABLE PRESSURE TURBOCHARGER

Provides optimal air flow to the engine combustion chamber under all speed and load conditions, so that exhaust gas is cleaner and fuel economy is improved.

SPC3 (3RD GENERATION OF SMART POWER CONTROL)

To improve fuel efficiency and reduce emissions, the SPC3 reduces engine speed and adjusts pump torque automatically, according to work conditions.

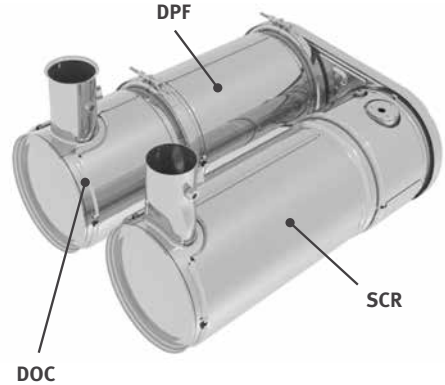



RELIABILITY – THE HABIT OF A LIFETIME

In your profession, you need equipment you can depend on. At Develon, we put durability and reliability at the core of our machines' development. Our materials and structures undergo stringent testing for strength and resilience under the most extreme conditions.

DESIGNED FOR LONG-TERM, ALL-ROUND, HEAVY-DUTY PERFORMANCE

UNDERCARRIAGE DURABILITY

A rigid, welded frame provides excellent durability. Efficient routing of hydraulic lines, transmission and rear differential protection and heavy-duty axles make the undercarriage perfect for wheeled excavator applications. An oscillating axle lock is available for digging and lifting operations.

NEW DRIVE LINE CONCEPT

The new travel motor and powershift transmission control in the drive line provide comfortable travel due to increased smoothness, improved hydraulic retarding and improved gear shifting.
A new travel mode, using the flow of 2 pumps, automatically adjusts the required engine power and rpm to avoid lost energy and provide the best fuel consumption.

ADVANCED DISC BRAKE SYSTEM

The new improved system allows a more efficient braking of the machine. This eliminates the rocking effect associated with working on wheels. The ZF axles are designed for low maintenance, and the oil change intervals have been increased to 2000 hours, further reducing owning and operating costs.

HEAVY-DUTY AXLES

The front axle offers wide oscillating and steering angles. The transmission is mounted directly on the rear axle for protection and optimum ground clearance.

STRENGTHENED BOOM AND ARM

During the development of our machines, we use intensive testing to calculate the best load distribution throughout the boom structure.
Combined with thicker material, this means that element fatigue is limited and both reliability and component life are increased. To better protect the base of the arm, reinforced bars have been added and the arm center and end boss have been strengthened.

ADVANCED FILTRATION

- Fuel filters and water separator: a filter-type high-performance water separator effectively captures moisture in the fuel, reducing impurities and helping minimize any fuel-related issues. Pre-filters and dual main filters as standard achieve a high degree of purity that minimizes fuel system failures.
- Cyclonic air pre-cleaner: air filter life and engine efficiency are directly related to the amount of debris ingested through the engine's air intake. Therefore, a cyclonic air pre-cleaner (as standard) is the first stage of an air intake system that prevents the majority of heavier-than-air particles from entering. Self-cleaning and maintenance-free, the system is able to expel all types of mixed debris, including mud, snow, rain, leaves, sawdust, chaff, etc.

PIN AND BUSHING ADVANCED TECHNOLOGY

Highly lubricated metal is used for the boom pivot to increase the component's lifetime and lengthen greasing intervals. The bucket pivot features EM (Enhanced Macrosurface) bushings. These have a tailored surface pattern and self-lubricating coating for optimized greasing and more efficient debris removal. Ultra-hard wear-resistant discs and bucket pivot polymer shims increase durability even more.

Exclusive parallel dozer and independent stabilizers are symmetrical for better customization – which also facilitates remarketing for the second-hand business:

1. Large reinforced covers protect the dozer and stabilizer cylinders
2. The dozer blade design facilitates pulling and mixing of materials
3. The stabilizers are kept well within the machine envelope, and the position of the pins is kept high to avoid bumping while moving over the ground
4. Parts in contact with the ground have been carefully designed to prevent damage to the surfaces
5. Wide pads to reduce ground pressure
6. Lifting eyes on dozer for secure transport – 4 additional eyes are on the undercarriage






1
2
3
4
5
6
7
8
9
10



1. Parallel wiper
2. 360° all-around view camera (AVM) (optional)
3. Develon Smart Touch
4. Proportional switch
5. Joystick 1-touch function button
6. Breaker/Booster button
7. Redesigned pedals
8. Flat, spacious, easy-to-clean floor
9. Joysticks and switches are integrated in adjustable control consoles
10. Heated and cooled (option) seat
11. Improved visibility on the bottom right
12. Separate seat height adjustment lever and cushion tilting function
13. Fully adjustable steering column

11

OPERATING IN HIGH COMFORT

BEST-IN-CLASS OPERATOR ENVIRONMENT

The DX210W-7 is designed to provide you with the best possible working conditions. The sophisticated state-of-the-art ROPS cab is pressurized and ISO-certified for your safety. A high-quality heated seat (and even seat cooling available as an option) with air suspension provides maximum operator comfort.
Make the most of the spacious and comfortable cab by tilting the redesigned, adjustable steering wheel column forward when not in use.

UNRIVALLED COMFORT

Comfortably seated, you benefit from a clear all-round view of the worksite and have easy access to several storage compartments. Noise and vibration levels are remarkably low, while air conditioning and automatic climate control allow you to keep working for hours on end without feeling tired.
Pedals, joysticks and armrests have all been designed for operator comfort and efficiency.

CAB SUSPENSION

The cab's suspension system (CabSus mount) dampens vibrations and provides outstanding protection against impact. This system absorbs shocks and vibrations much more effectively than a conventional silentblock suspension system.

DEVELON SMART TOUCH

The wide 8" Develon Smart Touch screen provides easy scrolling through the different menus, including power settings and auxiliary hydraulics settings. It also allows you to connect a Bluetooth device or listen to your favorite radio station.

360° ALL-AROUND VIEW CAMERA (AVM) SYSTEM (OPTION)

The 360° all-around view camera (AVM) system gives you full view of the machine's surroundings.







1. Develon Smart Key
2. Engine speed control dial
3. Travel speed selector switch
4. Fine Swing button
5. Boom LIS button
6. Light button
7. Cab lamp button
8. Overload warning device button
9. Auto hold button
10. Joystick steering button
11. Working lamp button
12. Mirror heater button (not for EU)
13. Travel alarm button

TAKE A SEAT IN BUSINESS CLASS

The ergonomic controls, the easy-to-view color monitor, and Develon Smart Touch place the machine firmly in your hands.

TOTAL CONTROL IN ALL SIMPLICITY

DYNAMIC POWER MANAGEMENT

- Automatic travel speed range selection (slow/fast)
- Activating the power boost control system increases digging force by 10%
- A 1-touch deceleration button immediately reduces engine speed to low idle
- Auto-idling starts 4 seconds (adjustable) after all controls are returned to neutral – reducing fuel consumption and noise levels in the cab

EFFORTLESS OPERATION

Steer the machine without taking your hand off the joystick with optional electric steering using a thumbwheel. For added comfort, you can quickly switch the function on and off by pressing and holding the roller.

LOAD ISOLATION SYSTEM (LIS)

Bumpy terrain ahead? We have you covered. Our switchable Load Isolation System largely mitigates the impact of bumps on the cab – enabling a smooth ride, increased productivity, and improved safety even on bumpy ground.

DEVELON SMART KEY

We bring automotive standards and comfort to construction machinery:

- Search function
- Coming/leaving home light function
- Remote door opening
- Keyless engine start

FINE SWING MODE

Enjoy significantly reduced shock and better productivity when handling loads, thanks to our switchable Fine Swing feature. This feature prevents bumps at the start and end of any boom movement (recommended for flat surfaces only).

4 WORK MODES AND 4 POWER MODES

These modes deliver the needed power, according to your specific application, while minimizing fuel consumption:

- Work modes: 1-way mode, 2-way mode, Digging mode and Lifting mode
  With the 2-way mode, we offer a priority valve on the attachment line to increase the machine's productivity when using an attachment and moving the arm at the same time. Engage the Tilt Rotator mode for increased accuracy by enabling smart distribution of hydraulic flow to eliminate back pressure.
- Power modes: Power Plus mode, Power mode, Standard mode, Economy mode

EXPERT FINGERTIP CONTROL

- The new multi-function 8" Develon Smart Touch screen displays all useful information in a visual and intuitive format.
- At a glance, you can check the machine’s status and settings to achieve optimal efficiency.
- Develon’s unique jog shuttle switch gives you easy and precise control over all machine functions.
- Highly sensitive and low-effort joysticks enable you to work safely, smoothly and confidently.
- The proportional thumb switches on the joysticks can be mounted horizontally or vertically, as the operator prefers, for optimal control of hydraulic attachments.

SIMPLE CUSTOMIZATION

Thanks to Develon's Smart Junction Box, managing electric equipment is a breeze with easy access and intuitive layout of all components.

AUTO DIGGING BRAKE

Automatically holds the service brake when the vehicle stops (speed is zero) without the driver stepping on the brake. When the transmission pedal is pressed, the brake is automatically released.





SIMPLE MAINTENANCE FOR MAXIMUM UPTIME

MAINTENANCE ACCESS MADE SIMPLE

- Large guard rails are installed along with anti-slip steps and plates, for safer, easier access to the whole upper structure.
- The air conditioning filter is placed on the side of the cab for easy access. The filter's cover can be locked and opened with a key.
- A battery cut-off switch makes it easy to disconnect the battery for long-term storage.
- The hour meter display can be easily checked from ground level.
- Shut-off valves have been fitted on the pre-filter piping line and fuel tank drain piping to make servicing easier and prevent pollution from leakage.
- Engine parts can be easily reached via the top and side panels.
- The radiator and oil cooler have been separated, making access for cleaning easier.
- For extra accessibility and servicing convenience, all filters (engine oil filter, fuel pre-filters, fuel filters and pilot filter) are located in the pump compartment.
- An electric transfer pump for initial priming of fuel filters is featured as standard.

ADBLUE® TANK

Connected to the ECU, sensors in the tank detect low levels of AdBlue® or any other system malfunction. To prevent over-filling during refilling, the machine is also equipped with an AdBlue® level indicator (LED light).

CENTRALIZED GREASING POINTS

To make maintenance easier, the greasing points have been centralized. An automatic lubrication system is available as an option.



TECHNICAL SPECIFICATIONS

ENGINE

Designed to deliver superior performance and fuel efficiency, the Develon DL06V diesel engine fully meets the latest Stage V emission regulations. To optimize machine performance, the engine uses high-pressure fuel injectors, air-to-air inter-cooler and electronic engine controls. 4-Cycle Water-Cooled, Wastegate Turbocharged, Diesel Oxidation Catalyst (DOC), Selective Catalytic Reduction (SCR) and Diesel Particulate Filter (DPF).

Model

Develon DL06V

No. of cylinders

6

Rated power at 1900 rpm

SAE J1995	141 kW (189 hp)
SAE J1349	138 kW (186 hp)

Max. torque at 1400 rpm

82 kgf·m

Idle (low - high)

800 [±10] - 2000 [±25] rpm

Displacement

5890 cm³

Bore × stroke

100 mm × 125 mm

Starter

24 V / 6 kW

Batteries – Alternator

2 × 24 V, 150 Ah – 24 V, 100 A

Air filter

Double element air cleaner and pre-filtered Cyclone Turbo dust separator

HYDRAULIC SYSTEM

The e-EPOS (Electronic Power Optimising System) is the brain of the excavator – minimising fuel consumption and optimizing the efficiency of the hydraulic system for all working conditions.
To harmonize the operation of the engine and the hydraulics, the e-EPOS is connected to the engine's electronic control unit (ECU) via a data transfer link.

- The hydraulic system enables independent or combined operations
- 2 travel speeds offer either increased torque or high speed
- Cross-sensing pump system for fuel savings
- Auto-deceleration system
- 4 operating modes, 4 power modes
- Flow and pressure control of auxiliary hydraulic circuits from control panel
- Computer-aided pump flow control

Maximum system pressure

Work	35 MPa
Travel	37 MPa

Pumps	Type	Max. flow at 2000 rpm	Relief valve pressure
Main	2 × parallel bent-axis axial piston	2 × 236 l/min	35 MPa
Pilot	Gear	27.4 l/min	4 MPa
Steering	Gear	69 l/min	18 MPa
Brake	Gear	22.4 l/min	15.4 MPa

UNDERCARRIAGE

Extremely robust construction throughout – made of high-quality durable materials with all welded structures designed to limit stresses. Lateral chassis welded and rigidly attached to undercarriage. Heat-treated connecting pins. Heavy-duty front axle with automatic or operator-controlled (on/off/auto) front axle oscillation lock.

Tire dimensions

10-20 16 PR

Overall width (standard axle / wide axle)

2530 mm / 2750 mm

Wheel base

2850 mm

Tread width (standard axle / wide axle)

1914 mm / 2114 mm

Oscillation angle

± 8°

HYDRAULIC CYLINDERS

High-strength steel piston rods and cylinder bodies. Shock-absorbing mechanism fitted in all cylinders for shock-free operation and extended piston life.

Cylinders	Quantity	Bore × rod diameter × stroke (mm)
Mono boom	2	120 × 85 × 1244
Articulated boom, lower	2	120 × 85 × 1045
Articulated boom, upper	1	170 × 105 × 763
Arm for mono boom	1	135 × 95 × 1450
Arm for articulated boom	1	135 × 100 × 1538
Bucket	1	120 × 80 × 1060
Blade	2	130 × 80 × 160
Stabilizers	2	130 × 80 × 391
Chocking	2	100 × 100 × 153

CAB

The air-conditioning and heating systems are integrated for optimal climate control. An automatically-controlled fan supplies the pressurized and filtered cab air, which is distributed throughout the cab from multiple vents.
The heated air suspension, adjustable operator's seat includes a seat belt. The operator can adjust the ergonomic seat and joystick console separately according to his preferences.

A-weighted emission sound pressure level at the operator's position, LpAd (ISO 6396:2008)

Declared: 71 dB(A)
Measured: 70 dB(A)

A-weighted sound power level, LwAd (2000/14/EC)

Declared: 102 dB(A)
Measured: 101 dB(A)

SWING MECHANISM

The swing mechanism uses an axial piston motor, driving a 2-stage planetary reduction gear bathed in oil for maximum torque.

- Swing bearing: single-row, shear type ball bearing with induction hardened internal gear
- Internal gear and pinion immersed in lubricant
- Increased swing torque reduces swing time
- The swing brake for parking is activated by spring and released hydraulically

Maximum swing speed

9.8 rpm

Maximum swing torque

6387 kgf·m

FLUID CAPACITIES

Fuel tank	351 l
Cooling system	30.7 l
AdBlue® (DEF) tank	31.5 l
Hydraulic oil tank	192 l
Engine oil	27 l
Swing device	5 l

DRIVE

The wheels are driven by a bent axial piston engine via a 2-speed powershift transmission. In addition to the 2-speed powershift transmission there is also an economy mode and a switch for the creep speed. A button makes it possible to pass from high to low in work mode. Two travel speed ranges offer a choice between increased torque or high speed.

Travel speed (creep/low/economy/high)

4 / 9 / 33 / 35 km/h

Maximum traction force

12 t

Minimum turning radius

7.2 m

Gradeability

70 % (35°)

BRAKES

Dual multi-disc circuit with sintered metal discs for extended service life. Braking system activated by a pump and accumulator circuits. Automatic brakes for standard, released when pressing the transmission pedal. Spring-applied hydraulically released parking brake mounted on the transmission shaft.

Accumulators

0.75 l - 3 MPa

BUCKETS

Bucket Type	Capacity (m³) SAE	Width (mm)		Weight (kg)	Digging force (ISO) (Normal / Press. up) (ton)
		With side cutters	W/O side cutters		
STD	0.86	1180	1117	693	15.6 / 16.5

TECHNICAL SPECIFICATIONS

COMPONENT WEIGHTS

Item	Weight (kg)	Remarks
Upper structure without front	10503	with counterweight
Undercarriage	7533	including front dozer and rear stabilizers
HD Undercarriage (sugar beet application)	8075	including front and rear stabilizers
Front assembly	4010	
Counterweight	4000	
Counterweight	3200	for articulated boom
Counterweight	4500	heavy
Mono boom (5.6 m)	1137	with bushing
Arm (3.0 m)	661	with bushing
Articulated boom (upper / lower)	500 / 1010	with bushing
Arm (2.4 m / 2.75 m)	577 / 661	
Bucket (0.86 m³)	696	
Mono boom (5.6 m)	1375	sugar beet
Boom cylinder	164	each
Arm cylinder	233	
Bucket cylinder	145	
Dozer	863	
Dozer cylinder	84	each
Stabilizer	1221	
Stabilizer cylinder	113	each
Chassis frame	2609	without attachment
Chassis frame HD	3407	without attachment

OPERATING WEIGHT

Operating weight	t	21.9	22.6	21.5	23.0
Boom	m	5.6 mono boom	5.6 mono boom	5.4 articulated boom	5.6 sugar beet boom
Arm	m	2.75	3.0	2.4	3.0
Bucket	m³	0.86	0.86	0.86	0.86
Counterweight	kg	4000	4000	3200	4000
Undercarriage attachment - front	-	stabilizers	stabilizers	stabilizers	stabilizers
Undercarriage attachment - rear	-	dozer	stabilizers	dozer	stabilizers

DEVELON BUCKETS

General Construction Bucket

The General purpose bucket is designed for digging and re-handling soft to medium materials (e.g. materials with low wear characteristics such as top-soil, loam, coal).



Heavy Construction Bucket

The Heavy-duty bucket is designed for mass excavations in dense materials such as hard packed clay, shot limestone, limited rock content and gravel.



DIMENSIONS

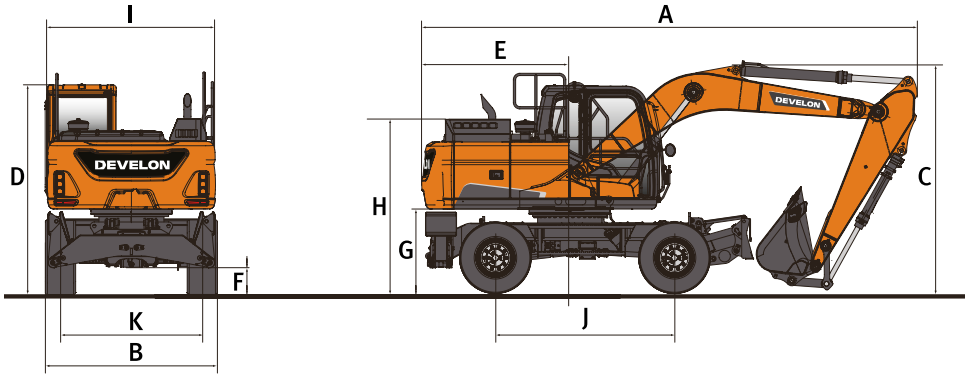

DIMENSIONS

		Unit	Mono boom			Articulated boom
Boom length		**mm**	**5600**			**5400**
Arm length		**mm**	**2400**	**2750**	**3000**	**2400**
A	Shipping length	mm	9495	9471	9477	9298
B	Shipping width (std axle)	mm	2530	2530	2530	2530
	Shipping width (wide axle)	mm	2750	2750	2750	2750
C	Shipping height (boom)	mm	3142	3084	3355	2988
	Shipping height (hose)	mm	3227	3169	3440	3173
D	Height over cab	mm	3155	3155	3155	3155
E	Tail swing radius	mm	2777	2777	2777	2777
F	Ground clearance	mm	337	337	337	337
G	Counterweight clearance	mm	1258	1258	1258	1258
H	Engine cover height	mm	2302	2302	2302	2302
I	Upper housing width	mm	2530	2530	2530	2530
J	Wheel base	mm	2850	2850	2850	2850
K	Tread width (std axle)	mm	1914	1914	1914	1914
	Tread width (wide axle)	mm	2114	2114	2114	2114

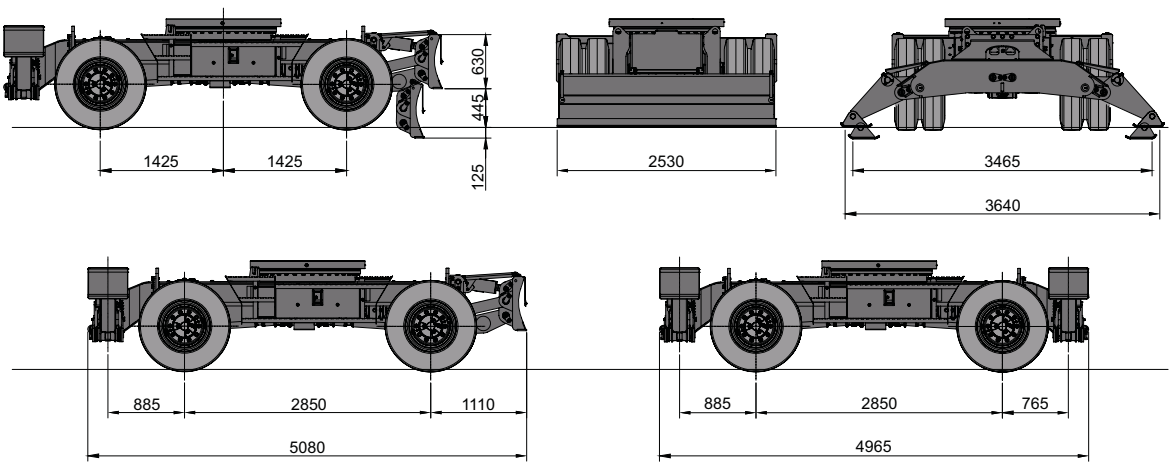

WORKING RANGE

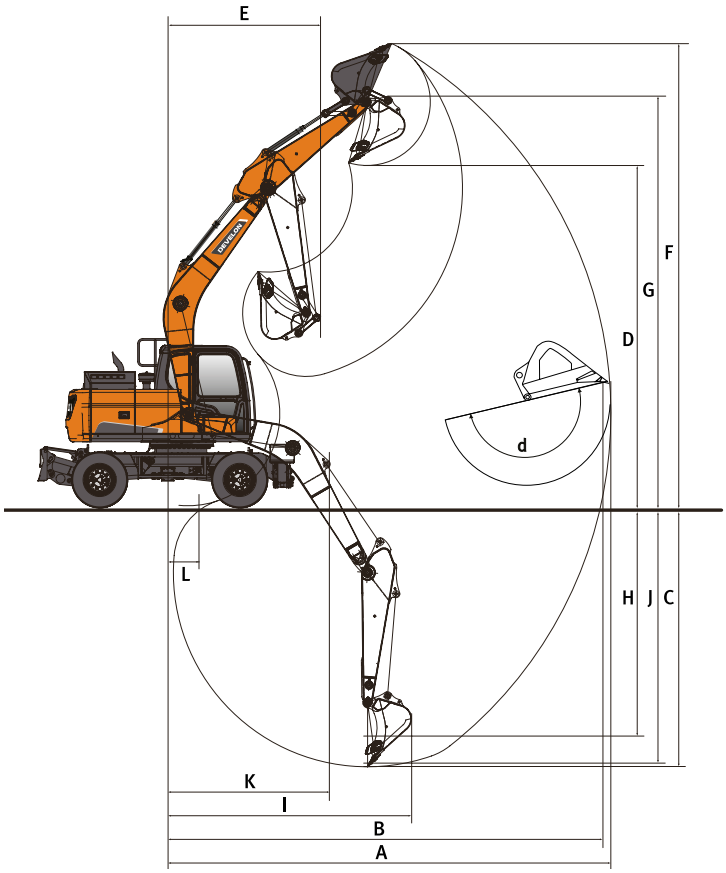

WORKING RANGE

	Unit	Mono boom			Articulated boom
Boom length	**mm**	**5600**			**5400**
Arm length	**mm**	**2400**	**2750**	**3000**	**2400**
A Max. digging reach	mm	9410	9705	9980	9415
B Max. digging reach (ground)	mm	9200	9505	9785	9205
C Max. digging depth	mm	5555	5905	6160	5605
D Max. loading height	mm	6985	7115	7350	7620
E Min. swing radius	mm	3340	3300	3445	3260
F Max. digging height	mm	9770	9870	10140	10530
G Max. bucket pin height	mm	8440	8570	8805	9075
H Max. vertical wall depth	mm	5120	5280	5715	3065
I Max. radius vertical	mm	6090	6365	6260	7805
J Max. digging depth (8'level)	mm	5345	5715	5980	5500
K Min. radius 8'level	mm	3180	3180	3180	835
L Min. digging reach	mm	1690	850	1040	-
d Bucket angle	°	177	178	177	177

LIFTING CAPACITIES

STANDARD AXLES • W/O BUCKET

(UNIT: 1000 KG)

A / B	Chassis Frame Attachment	1.5 m		3.0 m		4.5 m		6.0 m		7.5 m		Max. reach		
														A
Mono boom 5.6 m • Arm 2.75 m • Counterweight 4.5 t														
7.5 m	F-Dozer + R-Stabilizer Down											4.56*	4.56*	6.00
	F-Dozer + R-Stabilizer Up											4.56*	4.34	6.00
6.0 m	F-Dozer + R-Stabilizer Down							5.68*	5.68*			4.23*	4.23*	7.14
	F-Dozer + R-Stabilizer Up							5.68*	4.36			4.23*	3.26	7.14
4.5 m	F-Dozer + R-Stabilizer Down					7.28*	7.28*	6.16*	6.16*	5.62*	4.66	4.17*	4.17*	7.82
	F-Dozer + R-Stabilizer Up					7.28*	6.44	6.16*	4.21	4.45	2.97	4.15	2.76	7.82
3.0 m	F-Dozer + R-Stabilizer Down					9.00*	9.00*	6.92*	6.36	5.89*	4.56	4.28*	3.99	8.18
	F-Dozer + R-Stabilizer Up					9.00*	5.94	6.06	3.99	4.35	2.88	3.81	2.51	8.18
1.5 m	F-Dozer + R-Stabilizer Down					10.43*	9.32	7.63*	6.12	6.19*	4.45	4.58*	3.88	8.24
	F-Dozer + R-Stabilizer Up					8.82	5.51	5.82	3.78	4.24	2.78	3.70	2.42	8.24
0.0 m	F-Dozer + R-Stabilizer Down					10.93*	9.06	8.00*	5.96	6.29*	4.37	5.13*	3.99	8.02
	F-Dozer + R-Stabilizer Up					8.57	5.29	5.66	3.63	4.16	2.71	3.8	2.47	8.02
-1.5 m	F-Dozer + R-Stabilizer Down			11.41*	11.41*	10.53*	9.01	7.82*	5.90			5.86*	4.36	7.50
	F-Dozer + R-Stabilizer Up			11.41*	9.48	8.51	5.24	5.61	3.58			4.16	2.70	7.50
-3.0 m	F-Dozer + R-Stabilizer Down			12.54*	12.54*	9.22*	9.10	6.78*	5.96			5.79*	5.26	6.59
	F-Dozer + R-Stabilizer Up			12.54*	9.66	8.60	5.32	5.67	3.64			5.01	3.25	6.59
-4.0 m	F-Dozer + R-Stabilizer Down					6.30*	6.30*					5.68*	5.68*	4.86
	F-Dozer + R-Stabilizer Up					6.30*	5.56					5.68*	5.02	4.86
Mono boom 5.6 m • Arm 3.0 m • Counterweight 4.5 t														
7.5 m	F-Dozer + R-Stabilizer Down							5.47*	5.47*			4.40*	4.40*	6.37
	F-Dozer + R-Stabilizer Up							5.47*	4.39			4.40*	3.95	6.37
6.0 m	F-Dozer + R-Stabilizer Down							5.42*	5.42*			4.08*	4.08*	7.45
	F-Dozer + R-Stabilizer Up							5.42*	4.38			4.08*	3.04	7.45
4.5 m	F-Dozer + R-Stabilizer Down					6.91*	6.91*	5.93*	5.93*	5.42*	4.67	4.00*	4.00*	8.11
	F-Dozer + R-Stabilizer Up					6.91*	6.5	5.93*	4.23	4.46	2.97	3.91	2.59	8.11
3.0 m	F-Dozer + R-Stabilizer Down					8.65*	8.65*	6.71*	6.37	5.74*	4.56	4.08*	3.78	8.45
	F-Dozer + R-Stabilizer Up					8.65*	5.98	6.07	4	4.35	2.87	3.61	2.37	8.45
1.5 m	F-Dozer + R-Stabilizer Down					10.18*	9.34	7.47*	6.11	6.08*	4.43	4.32*	3.68	8.52
	F-Dozer + R-Stabilizer Up					8.84	5.52	5.82	3.77	4.23	2.76	3.51	2.29	8.52
0.0 m	F-Dozer + R-Stabilizer Down					10.85*	9.04	7.92*	5.93	6.25*	4.34	4.78*	3.77	8.31
	F-Dozer + R-Stabilizer Up					8.54	5.27	5.64	3.61	4.14	2.68	3.59	2.33	8.31
-1.5 m	F-Dozer + R-Stabilizer Down	6.67*	6.67*	10.64*	10.64*	10.61*	8.95	7.85*	5.86	5.99*	4.32	5.60*	4.1	7.80
	F-Dozer + R-Stabilizer Up	6.67*	6.67*	10.64*	9.36	8.46	5.19	5.57	3.54	4.11	2.65	3.91	2.53	7.80
-3.0 m	F-Dozer + R-Stabilizer Down			13.14*	13.14*	9.48*	9.02	7.00*	5.9			5.55*	4.86	6.94
	F-Dozer + R-Stabilizer Up			13.14*	9.53	8.52	5.25	5.6	3.57			4.63	2.99	6.94
-4.0 m	F-Dozer + R-Stabilizer Down					6.94*	6.94*					5.09*	5.09*	5.54
	F-Dozer + R-Stabilizer Up					6.94*	5.45					5.09*	4.17	5.54

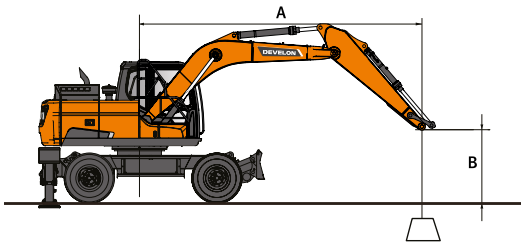

: Rating over front.
: Rating over side or 360°.

1. Lifting capacities are in compliance with ISO 10567:2007(E).
2. The load point is at the end of the arm.
3. * = The nominal loads are based on hydraulic capacity.
4. The nominal loads shown do not exceed 75% of tipping loads or 87% of hydraulic lifting capacity.
5. For lifting capacity with bucket. simply subtract the actual weight of the bucket from the values.
6. The configurations indicated do not necessarily reflect the standard equipment of the machine.

LIFTING CAPACITIES

STANDARD AXLES • W/O BUCKET

(UNIT: 1000 KG)

A / B	Chassis Frame Attachment	4.5 m		6.0 m		7.5 m		Max. reach		
										A
Articulated boom 5.4 m • Arm 2.4 m • Counterweight 3.2 t										
9.0 m	F-Dozer + R-Stabilizer Down							6.61*	6.61*	3.37
	F-Dozer + R-Stabilizer Up							6.61*	6.61*	3.37
7.5 m	F-Dozer + R-Stabilizer Down	5.03*	5.03*					4.44*	4.44*	5.59
	F-Dozer + R-Stabilizer Up	5.03*	5.03*					4.44*	4.01	5.59
6.0 m	F-Dozer + R-Stabilizer Down	5.15*	5.15*	5.13*	5.13*			3.80*	3.80*	6.79
	F-Dozer + R-Stabilizer Up	5.15*	5.15*	5.13*	3.65			3.80*	2.90	6.79
4.5 m	F-Dozer + R-Stabilizer Down	6.28*	6.28*	5.51*	5.51*	3.73*	3.73*	3.54*	3.54*	7.51
	F-Dozer + R-Stabilizer Up	6.28*	5.46	5.47	3.53	3.73*	2.42	3.54*	2.41	7.51
3.0 m	F-Dozer + R-Stabilizer Down	8.07*	8.07*	6.30*	5.53	5.62*	3.94	3.47*	3.47*	7.88
	F-Dozer + R-Stabilizer Up	8.07*	4.98	5.25	3.33	3.75	2.38	3.46	2.18	7.88
1.5 m	F-Dozer + R-Stabilizer Down	9.76*	8.10	7.16*	5.32	6.01*	3.86	3.56*	3.55	7.95
	F-Dozer + R-Stabilizer Up	7.64	4.59	5.04	3.14	3.66	2.30	3.37	2.11	7.95
0.0 m	F-Dozer + R-Stabilizer Down	10.72*	7.90	7.80*	5.19	6.30*	3.81	3.81*	3.68	7.72
	F-Dozer + R-Stabilizer Up	7.44	4.42	4.91	3.03	3.62	2.26	3.49	2.18	7.72
-1.5 m	F-Dozer + R-Stabilizer Down	10.90*	7.89	8.01*	5.17			4.32*	4.09	7.17
	F-Dozer + R-Stabilizer Up	7.43	4.41	4.89	3.01			3.89	2.43	7.17
Articulated boom 5.4 m • Arm 2.4 m • Counterweight 4.0 t										
9.0 m	F-Dozer + R-Stabilizer Down							6.61*	6.61*	3.37
	F-Dozer + R-Stabilizer Up							6.61*	6.61*	3.37
7.5 m	F-Dozer + R-Stabilizer Down	5.03*	5.03*					4.44*	4.44*	5.59
	F-Dozer + R-Stabilizer Up	5.03*	5.03*					4.44*	4.44*	5.59
6.0 m	F-Dozer + R-Stabilizer Down	5.15*	5.15*	5.13*	5.13*			3.80*	3.80*	6.79
	F-Dozer + R-Stabilizer Up	5.15*	5.15*	5.13*	4.06			3.80*	3.25	6.79
4.5 m	F-Dozer + R-Stabilizer Down	6.28*	6.28*	5.51*	5.51*	3.73*	3.73*	3.54*	3.54*	7.51
	F-Dozer + R-Stabilizer Up	6.28*	6.04	5.51*	3.94	3.73*	2.74	3.54*	2.73	7.51
3.0 m	F-Dozer + R-Stabilizer Down	8.07*	8.07*	6.30*	6.06	5.62*	4.34	3.47*	3.47*	7.88
	F-Dozer + R-Stabilizer Up	8.07*	5.57	5.76	3.74	4.14	2.69	3.47*	2.48	7.88
1.5 m	F-Dozer + R-Stabilizer Down	9.76*	8.89	7.16*	5.85	6.01*	4.25	3.56*	3.56*	7.95
	F-Dozer + R-Stabilizer Up	8.41	5.18	5.56	3.55	4.05	2.62	3.56*	2.41	7.95
0.0 m	F-Dozer + R-Stabilizer Down	10.72*	8.69	7.80*	5.71	6.30*	4.21	3.81*	3.81*	7.72
	F-Dozer + R-Stabilizer Up	8.21	5.00	5.43	3.44	4.01	2.57	3.81*	2.49	7.72
-1.5 m	F-Dozer + R-Stabilizer Down	10.90*	8.68	8.01*	5.69			4.32*	4.32*	7.17
	F-Dozer + R-Stabilizer Up	8.20	5.00	5.41	3.42			4.29	2.76	7.17

WIDE AXLES • W/O BUCKET

(UNIT: 1000 KG)

A / B	Chassis Frame Attachment	4.5 m		6.0 m		7.5 m		Max. reach		
										A
Articulated boom 5.4 m • Arm 2.4 m • Counterweight 4.5 t										
9.0 m	F-Dozer + R-Stabilizer Down							6.61*	6.61*	3.37
	F-Dozer + R-Stabilizer Up							6.61*	6.61*	3.37
7.5 m	F-Dozer + R-Stabilizer Down	5.03*	5.03*					4.44*	4.44*	5.59
	F-Dozer + R-Stabilizer Up	5.03*	5.03*					4.44*	4.44*	5.59
6.0 m	F-Dozer + R-Stabilizer Down	5.15*	5.15*	5.13*	5.13*			3.80*	3.80*	6.79
	F-Dozer + R-Stabilizer Up	5.15*	5.15*	5.13*	4.32			3.80*	3.48	6.79
4.5 m	F-Dozer + R-Stabilizer Down	6.28*	6.28*	5.51*	5.51*	3.73*	3.73*	3.54*	3.54*	7.51
	F-Dozer + R-Stabilizer Up	6.28*	6.28*	5.51*	4.20	3.73*	2.94	3.54*	2.93	7.51
3.0 m	F-Dozer + R-Stabilizer Down	8.07*	8.07*	6.30*	6.30*	5.62*	4.79	3.47*	3.47*	7.88
	F-Dozer + R-Stabilizer Up	8.07*	5.94	6.08	4.00	4.37	2.89	3.47*	2.67	7.88
1.5 m	F-Dozer + R-Stabilizer Down	9.76*	9.76*	7.16*	6.46	6.01*	4.70	3.56*	3.56*	7.95
	F-Dozer + R-Stabilizer Up	8.87	5.55	5.87	3.81	4.29	2.82	3.56*	2.60	7.95
0.0 m	F-Dozer + R-Stabilizer Down	10.72*	9.67	7.80*	6.33	6.30*	4.65	3.81*	3.81*	7.72
	F-Dozer + R-Stabilizer Up	8.67	5.38	5.74	3.70	4.24	2.77	3.81*	2.68	7.72
-1.5 m	F-Dozer + R-Stabilizer Down	10.90*	9.66	8.01*	6.31			4.32*	4.32*	7.17
	F-Dozer + R-Stabilizer Up	8.66	5.37	5.72	3.68			4.32*	2.98	7.17

STANDARD AND OPTIONAL EQUIPMENT

● Standard ○ Optional

Engine

- ● Develon DL06V, Stage V compliant, SCR, DOC and DPF post treatment, water-cooled diesel engine with Wastegate Turbocharger and air-to-air intercooler
- ● Auto-idle function
- ● Auto shut-off
- ● No EGR

Hydraulic system

- ● Boom and arm flow regeneration
- ● Fine Swing mode, on or off from cab
- ● Swing anti-rebound valves
- ● Spare ports (valve)
- ● One-touch power boost function
- ● Double way line high flow + Breaker piping (PE3C)
- ● Smart Power Control (SPC3)
- ● Cylinder cushioning & contamination seals
- ● 2 pumps travelling
- ○ Clamshell piping (diverter valve from bucket cylinder)
- ○ Hydraulic piping low flow for rotating or tilting tool (joystick control)
- ○ Hydraulic piping for quick-coupler
- ○ Double pump flow for attachments
- ○ Boom suspension for travelling LIS (not compatible with fenders)
- ○ Electric steering system from joystick

Cab & Interior

- ● Pressurized sound-insulated and CabSus mounted cab
- ● Fully adjustable air suspension seat with heater
- ● Air conditioning with climate control
- ● Pull-up type front window sun roller blind and removable lower front window
- ● Sliding left window
- ● Intermittent upper and lower windshield parallel wiper
- ● Rain visor
- ● Rear window defroster switch
- ● Adjustable PPC wrist control levers for arm boom bucket and swing
- ● Joysticks & pedals provide proportional control of auxiliary hydraulic lines
- ● Adjustable tiltable steering column
- ● Pedal for auxiliary control 1 & 2 ways
- ● Jog shuttle switch
- ● DEVELON Smart Touch – 8" touch screen, all-in-one
- ● Attachment management system
- ● Engine speed (RPM) control dial
- ● Automatic travel speed
- ● 4 operating modes & 4 working modes
- ● Electric horn
- ● Cigarette lighter
- ● Ceiling light
- ● Cup holder
- ● Multiple storage compartments (e.g. document holder under seat)
- ● Storage area (tools etc.)
- ● Heating and cooling lunch box
- ● Flat spacious easy-to-clean floor
- ● Keyless start (Develon Smart Key) & remote door lock/unlock
- ● Anti-theft protection
- ● 12 V spare power socket
- ● Serial communication port for laptop PC interface
- ● Remote radio ON/OFF switch
- ● Loudspeakers and connections for radio
- ● Radio + MP3 (stereo) with Bluetooth streaming and handsfree call system
- ○ 360° all-around view camera (AVM)
- ○ 360° all-around view camera (AVM) + ultrasonic detection
- ○ Fully adjustable air suspension seat (heating & cooling)

Safety

- ● Roll Over Protective Structure (ROPS)
- ● Boom and arm cylinder safety valves
- ● Overload warning device
- ● Large guard rails on upper structure and steps
- ● Rotating beacon
- ● Rear and side view camera
- ● Punched metal anti-slip plates
- ● Hydraulic safety lock lever
- ● Safety glass
- ● Hammer for emergency escape
- ● Right and left rear-view mirrors
- ● Lockable fuel cap and covers
- ● Battery cut-off switch
- ● Engine restart prevention system
- ● Emergency engine stop switch and hydraulic pump control switch
- ● Guard rails (ISO 2867:2011)
- ● Parking brake
- ● Automatic digging brake
- ● LED 7 Work lights (2 boom lamps, 3 body lamps, 2 additional lamps on cab)
- ○ LED Work lights 4 additional lamps (2 in the front, 2 in the rear of the cab)
- ○ FOGS cab – top and front cab guards (ISO 10262)
- ○ Front window upper and lower guards

Other

- ● 5600 mm boom – 3000 mm arm – 4000 kg counterweight
- ● DEVELON Fleet Management Web (telematic system)
- ● Auto shut-off fuel filler pump
- ● Double element air cleaner and pre-filtered Turbo dust separator
- ● Fuel pre-filter with water separator sensor
- ● Dust screen for radiator/oil cooler
- ● Self-diagnostic function
- ● Hydrostatic drive with 2-speed power shift transmission
- ● Remote greasing for swing circle and work group pivot points
- ○ 2400 mm arm
- ○ 2750 arm for mono boom
- ○ 5400 mm articulated boom with 3200 kg counterweight (road homologated configuration)
- ○ 5600 mm heavy duty mono boom sugar beet
- ○ 4500 kg counterweight
- ○ DEVELON buckets: Full range of GP, HD & rock buckets
- ○ DEVELON breakers and Develon quick-couplers
- ○ Additional filter for breaker piping
- ○ Automatic lubrication system
- ○ Air compressor
- ○ Road homologation (depending on countries)

Undercarriage

- ● Front dozer
- ● Rear independent stabilizers
- ● Double tires 10-20 16 PR
- ● Front axle oscillation lock modes (on/off/auto)
- ● Piston rod protection of stabilizer cylinders
- ● Lockable tool box (left side)
- ● Rear & front chain tightening eyes
- ○ Rear dozer
- ○ 2 or 4 independent stabilizers with cylinder protection
- ○ Lockable tool box (right side)
- ○ Heavy duty chassis frame (only available with HD boom)
- ○ Wide axle 2750 mm
- ○ Fenders (not compatible with LIS)

Powered by **Innovation**

DISCOVER MORE:
DX210W-7

DEVELON

DOOSAN Infracore Europe s.r.o.
IBC - Pobřežní 620/3, 186 00 Praha 8-Karlín
Czech Republic

©2023 DEVELON D4601041-EN (04-23)

Certain specification(s) are based on engineering calculations and are not actual measurements. Specification(s) are provided for comparison purposes only and are subject to change without notice.
Specification(s) for your individual Develon equipment will vary based on normal variations in design, manufacturing, operating conditions, and other factors. Pictures of Develon units may show other than standard equipment.