Mini excavators

DX20ZE

Battery Voltage	51 V
Battery Power	20.4 kWh
Operating Weight	1941 kg
Bucket capacity	0.05 m^3



DEVELON

DEVELON

Continuous evolution, for better.

We trace our roots to 1937 as one of Korea's first large-scale machine plants. During that time, we have consistently delivered earth-moving equipment to build critical infrastructure for the betterment of communities, societies and the wider world.

We are Develon.

Develon is a bold name that reflects our core ambition to continue developing onwards and leaving behind a positive footprint in our world. Moving forward, we will continue providing innovative products and solutions that advance the world we live in today.



DEVELON
Electric Mini Excavator

DX20ZE introduces the DEVELON -7 Series electric mini excavator category to the Develon mini excavator portfolio. Its meticulous design, enhanced standard features, attachment versatility, smooth manuverability and prioritized operator comfort translates into new opportunities of your businesss. Allowing unit to tackle a wide range of tasks.



Environmental Responsibility

- Enviromentally friendly - zero carbon and particles emission
- Power of 20, 4 kW to ensure high level of performance to extend working days
- Enhanced operator and nearby enviroment comfort by low operation noise

Charging Flexibility

- Optimize your time by choosing the charging option that suits your schedule
- On board charger with standard house voltage 220V
- Fast charger connected to a 380V network

Low Maintenance

- Productivity for operators by reduced daily maintenance routine
- Keeping machine up time
- Reduced overall operational costs

Enhanced Performance

- Zero-tail swing with the round-shaped counterweight ensure safe opeation in confined areas
- Narrow frame for access within tight areas and linked with an extendable undercarriage for unbeatable stability
- With large boom swing angle machine can handle a wide scope of operations at the job site

Develon Fleet Management

- Location of the machine
- Total and daily operation hours
- Battery level
- Utilization rate
- Anti-theft and theft recovery


ELECTRIC
DX 20ZE
85



Recharge fast, work faster





Flexibility 2x ways of charging the battery

Downtime isn't an option. You can depend on the -7 Series mini excavators to be ready when you are. These machines feature a durable design and solid construction that's engineered for the most punishing conditions and challenging tasks.

Sustainability without compromise

Upgrade your working conditions with our silent machone, a great asset that avoids noise pollution, allowing work anywhere at any time without disturbing the close neighborhood.

While stepping into the co-friendly realm with the DX20ZE limits of the job-sites are surpassed. Perform all the tasks on both conventional and constraint job-sites.

Flexibility of charging sessions make possible to have multiple shifts and extended working day by taking advantage of short breaks, lunchtime, or any available downtime to recharge the excavator.

On Board Charging

Simply plug into standard 220V house voltage and witness seamless charging within 8 hours, taking your machine from 0% to 100%.

Fast Charger

Connected to a 380V network, it gives you the opportunity to save time by recharging the battery in only 1,5 hrs. to 100%.
Rapid charging capability revolutionizes your workflow, minimizing downtime and maximizing productivity.

This charging solutions ensure that your machine is back at full capacity swiftly, allowing you to stay ahead of schedules and deadlines effortlessly.

Environmentally responsible

Downtime isn't an option. You can depend on the -7 Series mini excavators to be ready when you are. These machines feature a durable design and solid construction that's engineered for the most punishing conditions and challenging tasks.

Sustainability without compromise

Upgrade your working conditions with our silent machine, a great asset that avoids noise pollution, allowing work anywhere at any time without disturbing the close neighborhood. While stepping into the eco-friendly realm with the DX20ZE limits of the job-sites are surpassed. Perform all the tasks on both conventional and constraint job-sites.

Imagine a work environment where the air remains clean, the sounds are gentle, and the vibrations are barely noticeable. In such an atmosphere, operator comfort reaches unprecedented levels, allowing them to focus more on the task at hand without distractions. With zero emissions, there's no need to worry about harmful pollutants, making the workspace healthier for everyone involved.





Continue on the green side



Break the walls, not the silence



Quiet power on the jobsite

Ultimately, the combination of reduced noise, and lower vibrations is a testament to innovation that prioritizes both environmental sustainability and the well-being of those who operate within these spaces. Where comfort and productivity go hand in hand, the operator is in win-win situation.

Comfort and safety features

The fusion of diminished noise levels and minimized vibrations isn't just about environmental benefits—it's a game-changer for operators too.

Reduced noise levels create a serene ambiance, decreasing stress and fatigue, and enhancing concentration. Meanwhile, lower vibrations ensure a smoother operation, reducing operator fatigue and minimizing the risk of repetitive strain injuries.

The main advantage is not only about enhancing the well-being of operators, but also boosts productivity.
When operators are comfortable and focused, they can work more efficiently and with greater precision. Tasks that once seemed daunting become more manageable, leading to improved output and overall job satisfaction

All You Need for Big Work in Tight Spaces

DEVELON electric mini excavators deliver the compact size and rugged capability you need to take on demanding digging and lifting tasks in tight, crowded worksites. You can rely on them to dig, lift, swing, load and travel where other machines can't. Maneuverable and powerful, they'll run circles around your biggest jobsite obstacles.

Zero Tail Swing

Zero-tail swing feature with the round-shaped counterweight ensure safe operation in confined areas without the worry of collisions with enhanced balance.

Rounded Right Corner design significantly reduces the turning radius, simplifying navigation in tight spaces or closer to wall.

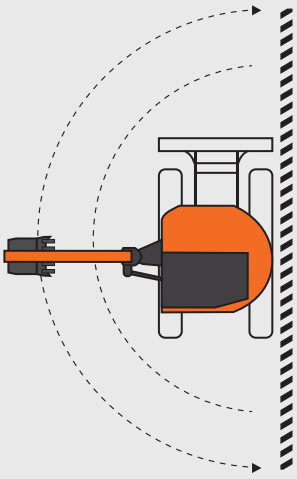

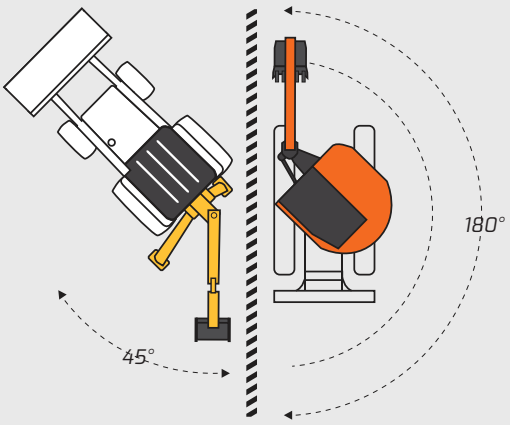

Versatility to do it all

In the compact job sites it ensure effortless and efficient movement at every turn. The adaptable track width of 950 (1360) mm enables seamless adjustment to various job requirements, even within tight spaces.

Attachments enable you to accomplish multiple tasks with a single machine making it easy to expand the service you offer.

You will find it easy to move from one job site to another and complete more work in less time. It is easily transportable and can be towed on a trailer, eliminating the need for specialized transport equipment.

Auto Idle

This feature automatically idles the machine after a few seconds of inactivity to improve power efficiency, reduce noise, and manage heat effectively. Pressing the 'wake-up' button on the joystick seamlessly returns the excavator to your previous throttle setting for smooth operation.

na.develon-ce.com/miniexcavator *Features vary by model. See model specifications for details at no.develon-ce.com/miniexcavator.*


DEVELON
DEVELON
DEVELON
ELECTRIC
ELECTRIC
DX 20ZE





It’s All About the Operator

Cab Comforts

The controls, buttons and general operations are similar to those on our large crawler and wheel excavators - making it easy to move from machine to machine.



The easy-to-read, full-color, 5,7’ LCD screen displays key machine data and control options.
The screen provides a high-resolution graphic display, enhanced machine vitals and diagnostic screens.



High-illumination LED lamps provide enhanced visibility to the work area to ensure that you can see the work group, particularly the attachment.



Arm, boon bucket cylinder protections engineered to withstand the challenging job site environments, ensuring longevity and durability for your equipment.



The strategically positioned emergency cut-off button provides instantaneous disruption of all machine functions, swiftly halting operations in critical situations.

All Service Points Within Easy Reach

Easy maintenance

Keeping your mini excavataors running at peak performance is simple and efficient. With onboard diagnostic systems, convenient component access and common DEVELON parts, it's easy to make regular maintenance a regular habit.



EasyComponent Access

To ensure that daily maintenance happens daily, DEVELON mini excavators offer easy access to filters and oil service points.

- Common DEVELON equipment design features easy serviceability access.
- The swing-open tailgate and side-access hood offer easy access to the engine and pump package, valve bank, cooling system and plumbing.
- Filters, fluids, air cleaner, battery and other maintenance points are easy to get to.
- Cooling cores can be separated for quick cleaning of the radiator.

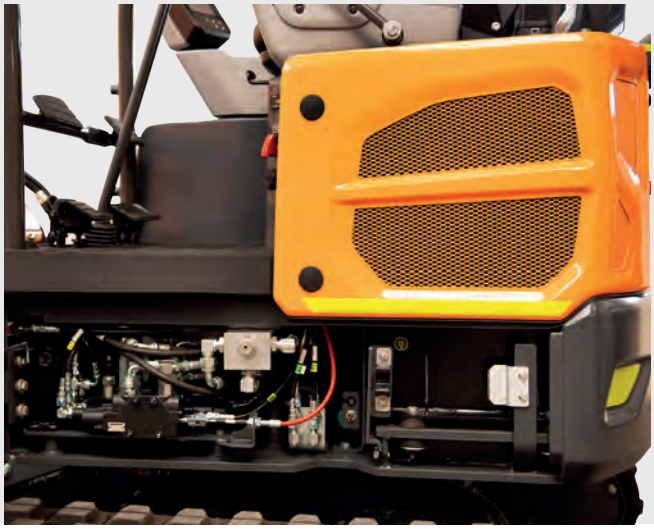


DEVELON
DEVELON
DEVELON
ELECTRIC
SAES

Develon Fleet Management > Management on the job site > Work efficiency management > Preventive management > Proactive service



Monitor your equipment from anywhere

To compete and succeed, your equipment needs to maximize job site productivity and the bottom line. Develon machines do both. To ensure a high return on investment, we add more premium features as standard equipment on every model. Our standard features are often options that other manufacturers only provide at extra cost. By including them as standard, Develon gives you a competitive edge — helping operators work more efficiently and improving safety during long days on the field.

Telematics terminal
Terminal device is installed and connected to a machine to capture machine data.

Telecommunication
Develon provides dual-mode (Mobile, Satelite) communication to maximize communication coverage.

Develon Fleet Management WEB
Users can monitor machine status from Develon Fleet Management Web.

Operation trend	Total operation hours and operation hours by mode.
Fuel efficiency*	Fuel level and fuel consumption
Reports & Location	Operation report & utilization. GSP and geo-fence.
Warning & Alert	Detect machine warnings, antenna disconnection, and geo/time fence
Filter & Oil management	Preventive maintenance by item replacement cycle.

**Functions may not be applied to all models. Please, contact your sales representative for more information on this feature.*


DEVELON
SAES

Attachments

Versatile Develon -7 Series mini excavators can use a variety of attachements so you can do more than dig- expanding your capabilities on every job. DEVELON attachments are built to DEVELON machine specifications for superior reliability and performance.



Heavy-Duty Bucket

Built with an abrasion-resistant AR 400 bottom for longer bucket life and reduced weight. Robust, one-piece curved side cutters with wear pads provide extra durability. Features a T-1 cutting edge and single point style replaceable tooth. Available with pin or quick-hitch style top caps.



Ditch-Cleaning Bucket

Built with an abrasion-resistant double bottom for longer bucket life. Straight side cutters increase material holding capacity for ditch-cleaning applications. A center gusset on wider models improves bucket integrity. Drain holes allow fluids to drain while cleaning ditches. Available with pin or quick-hitch style top caps.



Hydraulic Quick Coupler

Improves versatility for connecting a wide range of attachments without leaving the cab. Built with high-strength steel for maximum durability, and easily installed with jumper hoses to the standard quick coupler piping to the end of the arm. Install soft-pins to any pin-style attachment for easy hookup in normal or reverse configuration.



Thumb

The lightweight but rugged design includes press-in bushings, and the T-1 steel tines maintain a tight hold on any material with limited reduction in lifting capacity. Controlled movement with precise hydraulics allows the operator to easily grab delicate material or clamp tightly on construction debris. Installs quickly and easily due to thumb-ready arm and standard auxiliary hydraulics on the machine.

DEVELON

TECHNICAL SPECIFICATIONS

DX20ZE



Electric Power System

· Equipped with self-developed battery pack
· 50V low voltage system

Safe operation, economical electricity consumption
· Prevention of excessive temperature rise during charging

Model

Nominal voltage	51 V
Operating voltage	35 V / 58,8 V
Rated Power	20,4 kWh

Electric Motor

Rated Power	9 kWh
Operating mode	3000 rpm
Phase current	200 A
Torque	25N.m @ 2.400rpm
Peak torque	95N.m @ 2.400rpm

Hydraulic system

· 2 travel speeds offer either increased torque or high speed

· Auto-deceleration system

Main pump

Variable axial piston pump Maximum flow	17.6 l/min
	Relief valve settings
	DX20ZE
Implement	206 kgf/cm²
Travel	206 kgf/cm²
Swing	145 kgf/cm²

Undercarriage

Extremely robust construction throughout – made of high quality, durable materials, with all welded structures designed to limit stresses.

· Track rollers lubricated for life
· Idlers and sprockets fitted with floating seals
· Track shoes made of induction-hardened alloy with triple grouser
· Heat-treated connecting pins
· Hydraulic track adjuster with shock-absorbing tension mechanism

Lower rollers per side	3
Number of links & shoe per side	72
Link pitch	48 mm

Hydraulic cylinders

High-strength steel piston rods and cylinder bodies. Shock absorbing mechanism fitted in all cylinders for shock-free operation and extended piston life.

Cylinders	Quantity	Bore x rod diameter x stroke (mm)
Boom	1	60 × 35 × 439
Arm	1	55 × 35 × 425
Bucket	1	55 × 30 × 315
Dozer	1	70 ×35 × 118
Boom swing	1	60 × 30 × 323

CAB

The sophisticated ISO-certified TOPS pillar canopy – together with excellent visibility and stability – provides optimal operator comfort and safety. Comfortably seated, you have easy access to storage compartments and a clear all-round view of the work site. Noise and vibration levels are minimized.

A-weighted emission sound pressure level at the operator's position, LpAd (ISO 6396)	Declared: 70 dB(A)
	Measured: 69 dB(A)
A-weighted sound power level, LwAd (2000/14/EC)	Declared: 85 dB(A)
	Measured: 84 dB(A)

Swing Mechanism

The swing mechanism uses an axial piston motor, driving a 2-stage planetary reduction gear bathed in oil for maximum torque.

· Swing bearing: single-row, shear type ball bearing with induction hardened internal gear
· Internal gear and pinion immersed in lubricant

Maximum swing speed	9.6 rpm
Maximum swing torque	335 kgf·m

Fluid Capacities

Hydraulic system	28.5 l
Hydraulic oil tank	16 l
Travel device	2 × 0.35 l

Drive

Each track is driven by an independent, high-torque axial piston motor through a planetary reduction gearbox. 2 levers / foot pedals guarantee smooth travel with counter-rotation on demand. The track frame protects the travel motor, brake and planetary.

Travel speed (low - high)	2 - 3.7 km/h
Maximum traction	1.57 t

Weight & Ground Pressure

	Machine weight (kg)	Ground pressure (kgf/cm²)
	DX20ZE	DX20ZE
230 mm rubber shoes	1941	309

Arms

	Lenght (mm)	**Weight (kg)**	**Digging forces (ISO) (ton)**
DX20ZE	1100	36	0.785

Buckets

	Capacity (m³) SAE	**Width (mm)**		**Weight (kg)**	**Digging forces (ISO) (ton)**
		With side cutters	W/O side cutters		
DX20ZE	0.05	511	485	50	1.532

DIMENSIONS

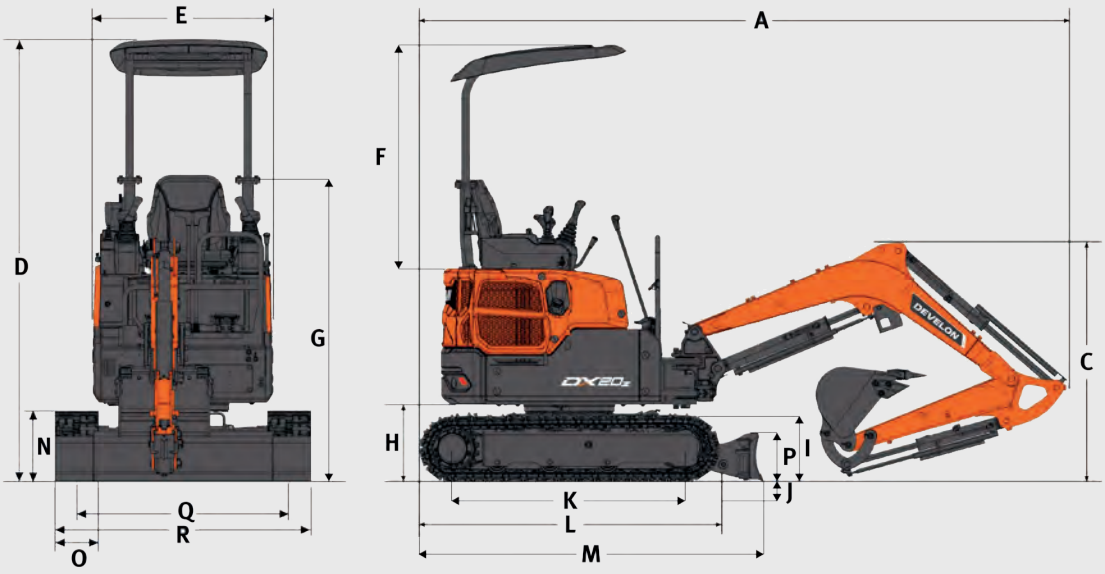

Dimensions

		Unit	DX20ZE
Boom length		mm	1725
Arm length		mm	1100
Bucket capacity		m^3	0.05
Undercarriage (track + grouser)		-	Rubber
L1 Overall length		mm	3460
H1 Overall height	Boom	mm	1283
	Cab	mm	2345
W1 Overall width		mm	950 (1360)
R1 Rear swing radius		mm	720
H2 Ground clearance		mm	155
L2 Rear end distance		mm	720
W2 House width		mm	950
W3 Cab width		mm	950
H3 Height over cover		mm	1151
H4 Counterweight clearance		mm	419
A1/A2 Boom swing angle (left/right)		°	45/70
H5 Track height		mm	356
L3 Track length		mm	1612
L4 Tumbler distance		mm	1258
W4 Track gauge		mm	720 (1130)
W5 Undercarriage width		mm	950 (1360)
W6 Shoe width		mm	230
H6 Blade digging depth		mm	234
H8 Blade lift clearance		mm	251
H9 Blade blade height		mm	265
L8 Distance to blade end		mm	1045

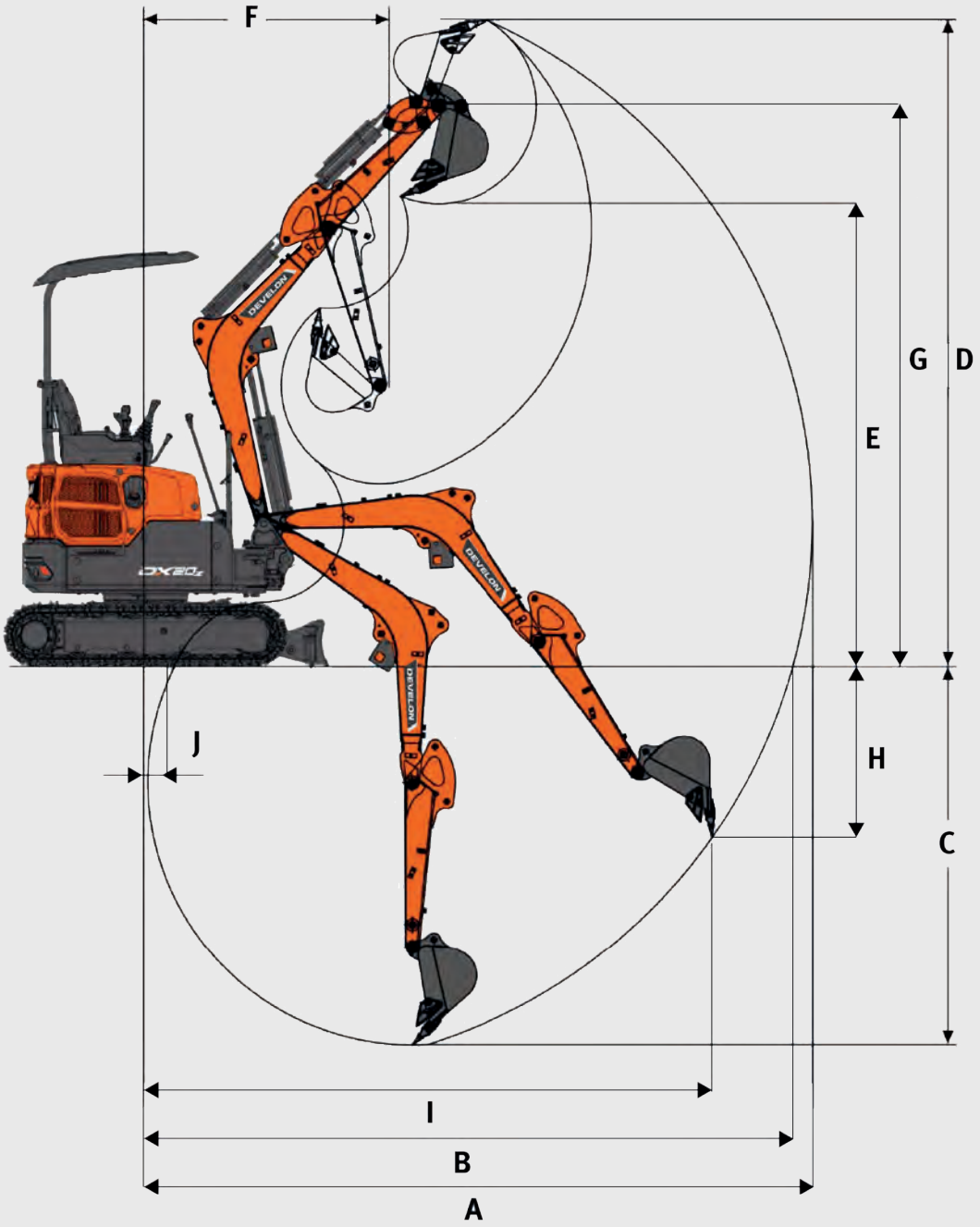

Working Range

	Unit	DX20ZE
Boom length	mm	1725
Arm length	mm	1100
Bucket capacity	m^3	0.05
A Max. digging reach	mm	3975
B Max. digging reach (ground)	mm	3875
C Max. digging depth	mm	2350
D Max. dumping height	mm	3650
E Min. swing radius	mm	1535
F Max. digging height	mm	3650
G Max. bucket pin height	mm	3190
H Max. vertical wall depth	mm	1130
I Max. radius vertical	mm	3340

STANDARD AND OPTIONAL EQUIPMENT

● Standard ○ Optional

Develon battery pack

Nominal Voltage	51 V
Capacity	20.4 kWh (26.8 hp)
On-Board Charger	Power Output 3.3kw (220V AC, 16A)

Safety

- ● Battery switch-off
- ● Boom light protection, metal
- ● Boom LED lights
- ● Bucket and arm cylinder guards
- ● Battery cover

Cab & interior

- ● 4 pillar canopy
- ● ZHS upper-structure concept
- ● Track expansion switch
- ● Stationary seat
- ● Small storage compartment
- ● 2-speed travel

Other

- ● 1.1 m arm
- ● 1.725 m boom
- ○ Quick charger

Hydraulic System

- ● Hydraulic joystick control
- ● One to way way flow auxiliary lines on arm
- ○ Quick coupler piping

Undercarriage

- ● Extendable undercarriage
- ● 950 mm dozer blade with two blade extensions (1360 mm extended)

Develon Warranty

Your key to equipment protection and peace on mind

Unlock unparalleled protection for your heavy construction equipment with Develon. Our robust warranties and premium protection plans ensure your investment is safeguarded and adds lasting value.

Tailored warranty plans
Choose from a range of affordable protection plans, designed exclusively for Develon customers through our authorized dealers. These plans turn your machine's price into a strategic investment, not just an expense.

Develon Premium: Premium protection
Opt for Develon Premium to experience unmatched security, reliability, and overall value. This top-tier plan shields your equipment from unexpected costs and minimizes downtime, letting you focus on what matters – getting the job done*.

Act now!
Contact our authorized Develon Dealers today and fortify your equipment investment. With a seamless process and lasting benefits, Develon ensures your heavy construction equipment remains in peak condition.

Choose Develon Extended Warranty: Play safe and secure your investments.

** Only for ADT, HEX and WLO.*
Offer may vary based on model.

Powered by **Innovation**

DEVELON

Space for dealer's stamp

HD Hyundai Infracore Europe s.r.o.
IBC – Pobrezni 620/3,
18600 Praha 8 – Karlin, Czechia

©2024 HD Hyundai Infracore. All rights reserved.

Certain specification(s) are based on engineering calculations and are not actual measurements. Specification(s) are provided for comparison purposes only and are subject to change without notice. Specification(s) for your individual Develon equipment will vary based on normal variations in design, manufacturing, operating conditions, and other factors. Pictures of Develon units may show other than standard equipment.