Mini Excavators

DX17Z-7
DX19-7

Maximum power	16.5 hp	
Operating weight	1850 kg	1885 kg
Max. bucket capacity	0,04 m^2	





DEVELON

DEVELON

Continuous evolution, for better.

We trace our roots to 1937 as one of Korea's first large-scale machine plants. During that time, we have consistently delivered earth-moving equipment to build critical infrastructure for the betterment of communities, societies and the wider world.

We are Develon.

Develon is a bold name that reflects our core ambition to continue developing onwards and leaving behind a positive footprint in our world. Moving forward, we will continue providing innovative products and solutions that advance the world we live in today.



Lift higher, reach farther

Reliability
Reinforced castings and forged steel pivot points, reinforced heavy-duty arm and boom to withstand high-impact materials. Standard and long arm for added versatility. Improved hydraulic line routing to protect your investment.

Productivity
State-of-the-art bucket, arm digging and pulling forces deliver higher productivity and reduced fuel consumption in an efficient and comfortable work environment.

Adaptable & Smooth
Ready for many tasks, versatile and adaptable to access wide range of spaces, performing at many tasks efficiently and effectively.
Environment where space, resources, and budgets are limited.

Stable & secured
The DX17Z-7 and DX19-7 are built around the operator – providing optimal ergonomics for operators of all sizes. With a large and spacious canopy or cab and an uncompromising operator environment designer with safety as the top priority. Adaptable tracks ass value on top of enhance performance and safety by providing additional support for stability.

Controllability
Smooth and precise hydraulics drive all attachments needed on the job site.

- Operator can control flow rate proportionally.
- 2 Travel speeds with automatic auto shift.
- Thumb-wheel controllers ensure smooth and precise performance.
- Easy to read and use, the new 5" Digital screen integrates all functions and settings of your machine in one place.


DEVELON
92
DX19

The Perfomance-Driven Power

DX17Z-7 and DX19-7 make the best possible use of the engine's power, empowering operators with 16.5 hp. Fast cycle times, combined with smooth control of classleading breakout forces, provide maximum productivity. Boom and arm cylinder cushioning enhance the overall smoothness of the workgroup.

The DX17Z-7 and DX19-7 are able to manage heavier loads with ease, in all applications. Along with their extended reach. Their stability is unmatched, even when handling the most substantial loads.

Their superior dumping height makes loading trucks easy, while the reach at ground level means you don't need to reposition the machine as often when digging.



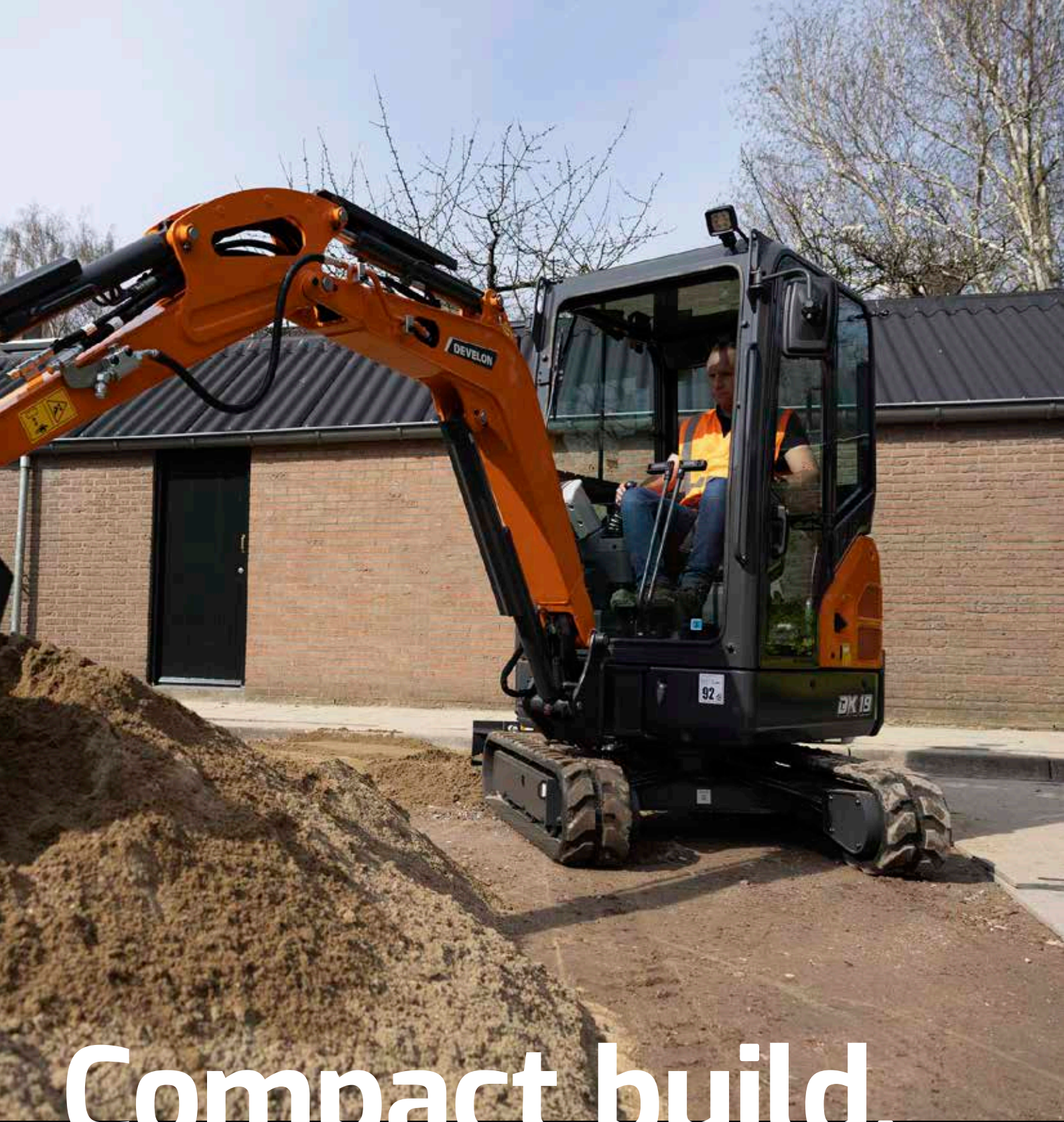

Compact build, Colossal power



From every task to every challenge



Efficiency Redefined: Seamlessly Adaptable Performance in Compact Work Environments

DEVELON DX17Z-7 / DX19-7 mini excavators deliver the compact size and rugged capability you need to take on demanding digging and lifting tasks in tight, crowded worksites. Embrace versatility with maximum functionality in tight job sites, making every movement effortless and efficient. Different length of arms available for both of units. You can rely on them to dig, lift, swing, load and travel in every terrain. Maneuverable and powerful, they'll run circles around your biggest job site obstacles. DX17Z-7 provides opportunity of additional counterweight selection for both types of arms.

Eased Transport

Quickly move from job site to job site and get to work sooner. Easy-access machine tiedowns make loading, securing and transporting fast and convenient. Possibility to be towed on a trailer, eliminating the need for specialized transport equipment. This not only saves you time but also reduces the logistical.



Lift High, Reach Far, Stay Grounded



Safe with every move

In each movement DX17Z-7 and DX19-7 prioritize safety that on the other hand, leads to the highest productivity output.

Zero House Swing
Zero-tail swing feature of DX17Z-7 with the round-shaped counterweight ensure safe operation in confined areas without the worry of collisions with enhanced balance.

Stay securely stable
Stability is essential for making maximum use of the digging forces and lifting capacities. DX17Z-7 / DX19-7 with adaptable track width enable seamless adaptation to diverse job requirements, even in the most confined spaces. With the proper weight distribution enhances stability preventing excessive tilting or tipping during material discharge.

Easy operation for enhanced performance

It's All About the Operator.
The controls, buttons and general operations are similar to those on our large crawler and wheel excavators — making it easy to move from machine to machine.



Highly sensitive, low-effort joysticks and clear convenient controls enable you to work safely, smoothly & confidently with minimum effort. Proportional auxiliary flow means precision control, smoothness & efficiency when using attachments.

The 5' Digital Display, with its user-friendly interface, offers enhanced safety features, including warning indicators accompanied by a reassuring buzzer sound. This proactive approach ultimately ensuring smooth operations and optimal efficiency.

Standard heating and radio with cab version of DX19-7 will take care your pleasant working environment.





Simple maintenance for longer uptime

DEVELON mini excavators offer easy access to all key maintenance components designed for low maintenance with longer intervals – resulting in more machine availability – while skilled Develop-trained technicians are available to provide extra support when needed.

Dependable performance for low lifetime cost

Strategically designed front assembly in both the DX17Z-7 and DX19-7 with an optimal hydraulic hose layout running through the boom structure ensure class-leading durability and peace of mind while working. Security of the equipment goes a step further by providing Bucket and arm cylinder guards. All these durable features enhance continuous efficiency and long uptime.

- The engine compartment is designed to facilitate easier servicing, with all key components housed under one cover and ample space provided.
- Fine mesh on the side doors and on the cooler itself filters the intake air going to the cooler for better cooling performance and reduced maintenance.
- Maintenance data directly available from the control panel.






DEVELO




DX 17z


DEVELON
DX 17z







Work in tight spaces, in total safety

The most compact, and the most comfortable!

Discover enhanced safety with DX17Z-7 and DX19-7 excavators, equipped with cutting-edge features designed to elevate your work environment. Engineered for precision and reliability, our machines prioritize operator safety without compromising performance.

The DX17Z-7 / DX19-7's sophisticated ISO-certified TOPS/ ROPS/FOPS canopy – with excellent visibility and stability – provides optimal operator comfort and safety.

The DX19-7's steps further by offering pressurized ISO-certified ROPS cab, combined with excellent visibility and stability, provide optimal operator comfort and safety. Thanks to the wide door, the operator can enter and sit down with ease.

Standard safety components not only ensure the safety of the equipment but also safeguard the workforce around the machine:

Travel Alarm
Providing sound alerts, the travel alarm keeps operators vigilant, minimizing the risk of accidents and promoting heightened awareness of the machine's movements.

Rotating Beacon
Illuminating the surroundings and signaling the presence of the machine, particularly crucial in low-light conditions and busy job sites.

Boom LED Light
Illuminating the work area to optimize visibility, ensuring clarity and promoting safer operation throughout the day.

With simultaneous controllers, the speed switch is integrated into the travel levers, allowing you adjust the speed without losing concentration on your operations.

The DX19-7 cab with air circulation via 3 air vents provides a fast defrost system ensures permanent clear visibility and a safer working environment.

DEVELON Fleet Management
Terminal device installed and connected to a machine to capture machine data, operation report & utilization. Location of the machine and preventive maintenance by item replacement cycle.

Develon Fleet Management > Management on the job site > Work efficiency management > Preventive management > Proactive service



Attachments

Versatile DEVELON-7 Series mini excavators can use a variety of attachments so you can do more than dig — expanding your capabilities on every job. DEVELON attachments are built to DEVELON machine specifications for superior reliability and performance.

Pin-on quick coupler		The quick coupler perfectly fits your Develon Mini Excavator as it is constructed based on your machine's kinematics. You're guaranteed a precise and secure connection, as the new quick coupler features perfectly fitted stoppers. This quick coupler has been modeled to endure extreme conditions and work optimally in any loading scenario.
Digging buckets with teeth		The digging buckets are equipped with thick and chamfered side cutters, and bottom wear straps covering 90% of the bottom of the bucket.
Grading bucket		The grading bucket is equipped with one or more web plates to increase the stiffness of the bucket.

DEVELON

TECHNICAL SPECIFICATIONS

DX17Z-7
DX19-7



Engine

Make	KUBOTA
Model	D902
Number of cylinders	3
Rated power, gross	16.2 hp (12.1 kW) @ 2400 rpm
Rated power, net	16 hp (11.9 kW) @ 2400 rpm
Max. torque, net	5.57 kgf.m @ 1900 rpm
Displacement	0.898 l
Bore and stroke	72 × 73.6 mm
Starter	12 V, 1.2 kW
Alternator	12 V, 40 A
Air cleaner	Double elements

Hydraulics

Main pumps	2 × 17.3 l/min @ 2300 rpm
Pilot pump (gear design)	10.4 / 6.2 l/min @ 2300 rpm
Relief presure aux. line	206 bar

Maximum System Pressure

Boom/arm/bucket (normal mode)	210 kg/cm²
Swing (crossover relief)	165 kg/cm²

Swing Mechanism

Swing speed	9.2 rpm
Swing torque	4025 lbf·ft. (557 kgf·m)

Drive System

Travel speed (low – high)	2.06 – 3.73 km/h
Traction force, max. (drawbar pull)	14.13 Kn
Max. Gradeability	35°

Environment

Sound level (ISO 6395)	92 dB(A)
Cabin sound level (ISO 6396)	75.3 dB(A)

Refill Capacities	DX17Z-7	DX19-7
Fuel tank	19.5 l	21.3 l
Cooling system (radiator capacity)	5.4 l	
Engine oil	3.7 l	
Travel device	2 × 0.33 l	
Hydraulic tank	12.1 l	20 l

Dimensions

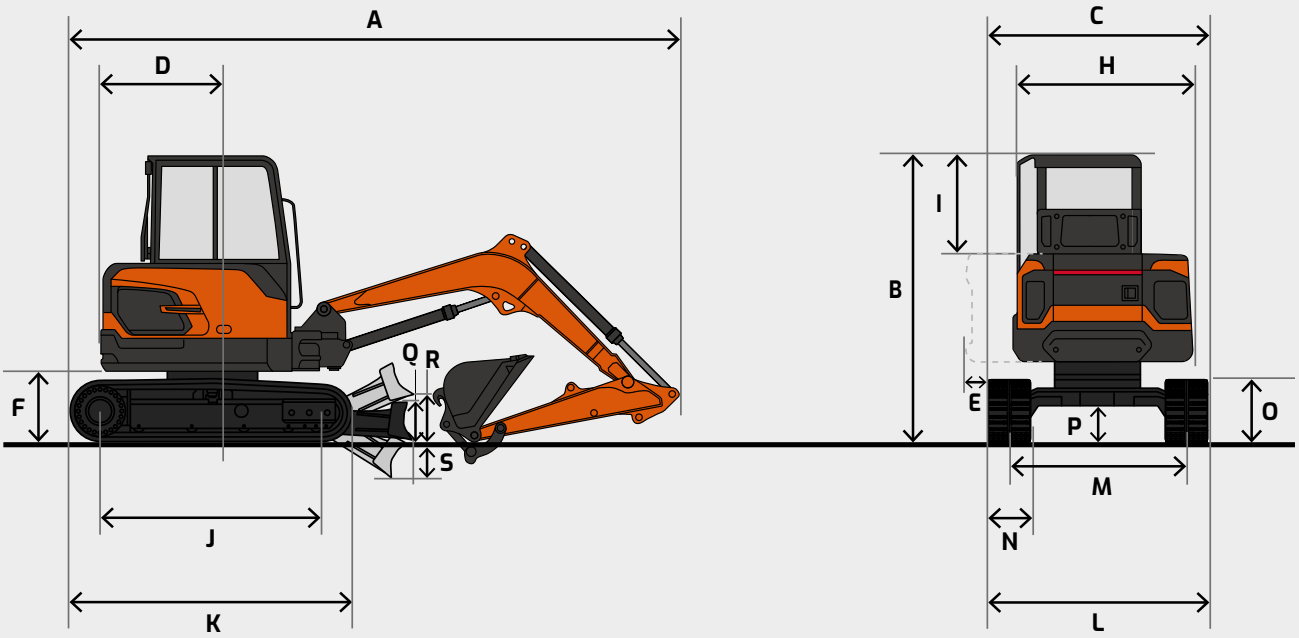

Machine Dimensions		Unit	DX17Z-7 (Canopy)		DX19-7 (Canopy)	DX19-7 (Cab)
	Boom length	mm	1750		1750	
	Arm length	mm	1030	1230	1030	1230
	Bucket capacity	m^3	0.04		0.04	
	Undercarriage (track + grouser)	-	Rubber		Rubber	
	Operating weight	kg	1850	1980	1885	2020
	Counterweight	kg	180	260		
A	Overall length	mm	3531	3528	3837	3835
C	Overall width (track extension)	mm	994 (1290)		994 (1290)	
Y	Overall width (dozer blade)	mm	1294		1294	
B	Overall height	mm	2320		2275	2270
H	Overall width of upper structure	mm	980		980	
I	Overall height of canopy	mm	2320		2275	2270
	Ground clearance of counterweight	mm	415		415	
	Overall height of engine hood	mm	1095		1240	
P	Minimum ground clearance	mm	150		150	
	Rear-end distance	mm	645	720	1065	
	Rear-end swing radius	mm	645	720	1065	
J	Distance between tumblers	mm	1230		1230	
K	Undercarriage length	mm	1580		1580	
L	Undercarriage width (track extension)	mm	994 (1290)		994 (1290)	
M	Track gauge (track extension)	mm	764 (1060)		764 (1060	
N	Track shoe width	mm	230		230	
Q	Height of blade	mm	225		225	
R	Ground clearance of blade up	mm	183		183	
S	Depth of blade down	mm	222		222	

Dimensions - DX17Z-7

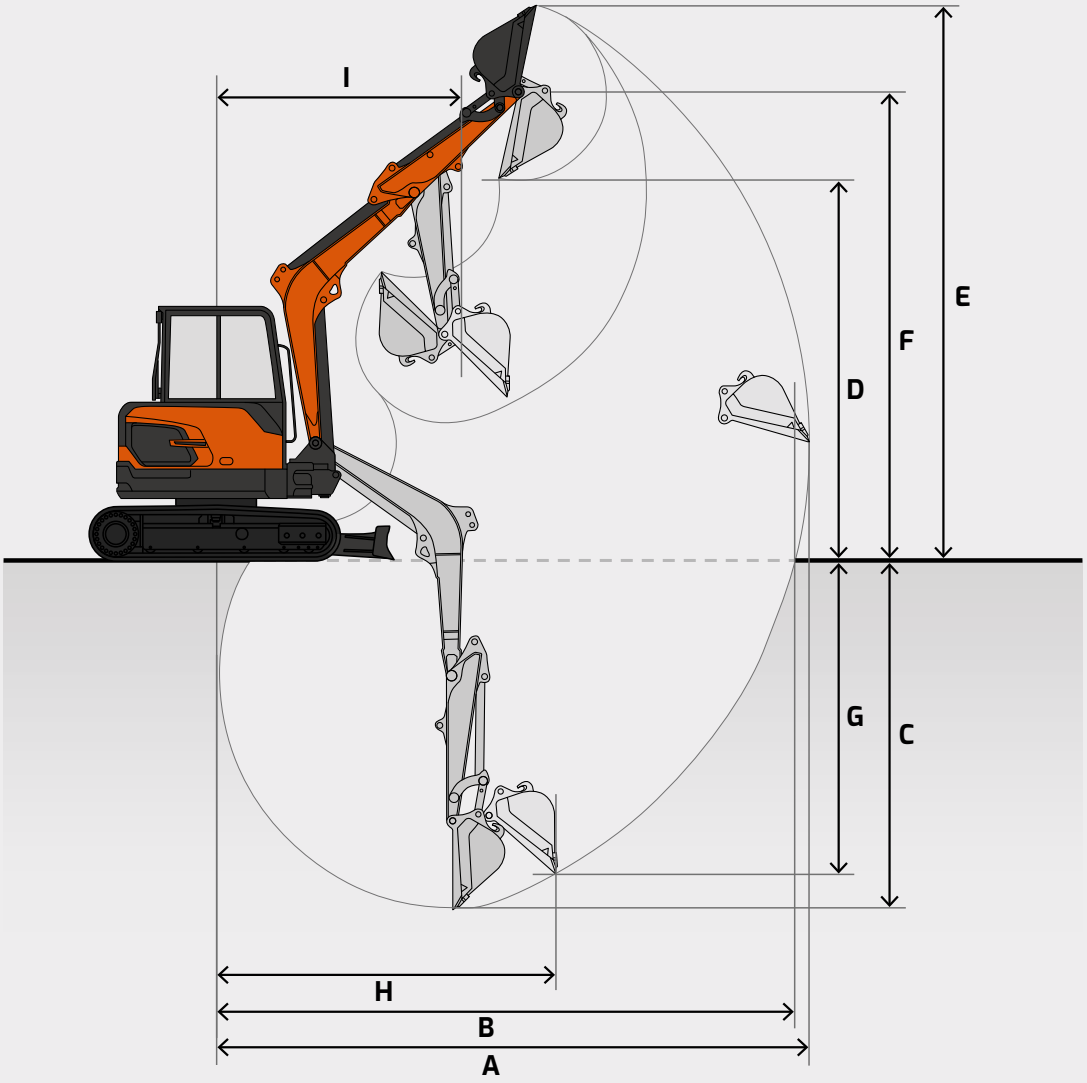

Working Range		Unit	DX17Z-7	DX17Z-7
	Arm length	mm	1030	1230
C	Max. digging reach	mm	3910	4100
	Max. digging reach (ground level)	mm	3820	4010
G	Max. digging depth	mm	2240	2440
A	Max. vertical wall depth	mm	1750	1940
E	Max. digging height	mm	3730	3870
F	Max. dumping height	mm	2670	2810
I	Min. swing radius	mm	1580	1645
	Boom swing angle (left/right)	°	55 / 59	

Dimensions - DX19-7

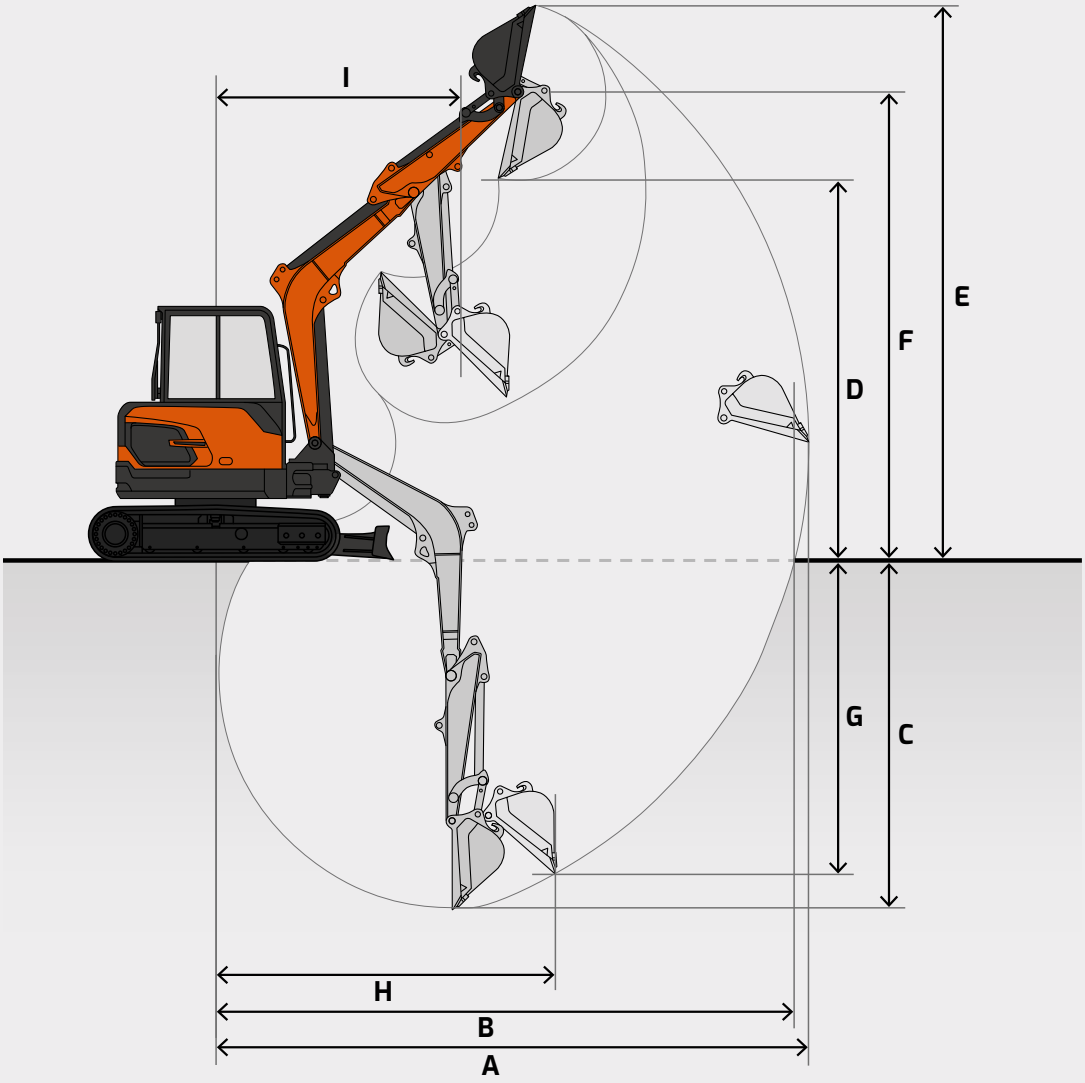

Working Range		Unit	DX19-7 (Canopy)	DX19-7 (Canopy)	DX19-7 (Cab)
	Arm length	mm	1030	1230	1230
C	Max. digging reach	mm	3940	4130	4130
	Max. digging reach (ground level)	mm	3850	4040	4040
G	Max. digging depth	mm	2340	2540	2540
A	Max. vertical wall depth	mm	1840	2020	2020
E	Max. digging height	mm	3470	3585	3585
F	Max. dumping height	mm	2440	2550	2550
I	Min. swing radius	mm	1725	1760	1760
	Boom swing angle (left/right)	°	55 / 59		55 / 59

Lifting Capacities - DX17Z-7

	A	1.0 m		1.5 m		2.0 m		2.5 m		3.0 m		Max. reach		
B														A

CWT 1.8 t · Boom 1750 · Arm 1030 m · Shoe (Rubber) 230 mm · Blade up

3.0 m					390 *	390 *					410 *	410 *	2.18
2.5 m							370*	360			320	300	2.74
2.0 m					380 *	380 *	370	350	270	260	260	250	3.07
1.5 m			660 *	660 *	510 *	490	360	340	270	260	230	220	3.27
1.0 m					490	460	350	330	260	250	220	210	3.36
0.5 m					470	440	340	320	260	250	220	210	3.36
0 m			730	670	460	430	330	310	250	240	230	220	3.26
-0.5 m	800 *	800 *	730	670	450	520	330	310	250	240	250	240	3.05
-1.0 m	1220 *	1220 *	740	680	460	430	330	310			300	280	2.7
-1.5 m			720*	700	470	440					430 *	410	2.11

CWT 1.8 t · Boom 1750 · Arm 1030 m · Shoe (Rubber) 230 mm · Blade down

3.0 m					390 *	390 *					410 *	410 *	2.18
2.5 m							370*	360			320	300	2.74
2.0 m					380 *	380 *	370	350	270	260	260	250	3.07
1.5 m			660 *	660 *	510 *	490	360	340	270	260	230	220	3.27
1.0 m					490	460	350	330	260	250	220	210	3.36
0.5 m					470	440	340	320	260	250	220	210	3.36
0 m			730	670	460	430	330	310	250	240	230	220	3.26
-0.5 m	800 *	800 *	730	670	450	520	330	310	250	240	250	240	3.05
-1.0 m	1220 *	1220 *	740	680	460	430	330	310			300	280	2.7
-1.5 m			720*	700	470	440					430 *	410	2.11

CWT 2.6 t · Boom 1750 · Arm 1030 m · Shoe (Rubber) 230 mm · Blade up

3.0 m					390 *	390 *					410 *	410 *	2.18
2.5 m							370 *	370 *			350 *	340	2.74
2.0 m					380 *	380 *	380 *	380 *	310	290	290	280	3.07
1.5 m			660 *	660 *	510 *	510 *	400	380	300	290	260	250	3.27
1.0 m					550	510	390	370	300	280	250	240	3.36
0.5 m					520	490	380	360	290	280	250	230	3.36
0 m			730 *	730 *	510	480	370	350	290	270	250	240	3.26
-0.5 m	800 *	800 *	810	750	510	480	370	350	280	270	280	260	3.05
-1.0 m	1220 *	1220 *	820	760	510	480	370	350			330	320	2.7
-1.5 m			720 *	720 *	480 *	480 *					430 *	430 *	2.11

CWT 2.6 t · Boom 1750 · Arm 1030 m · Shoe (Rubber) 230 mm · Blade down

3.0 m					390 *	390 *					410 *	410 *	2.18
2.5 m							370 *	370 *			350 *	340	2.74
2.0 m					380 *	380 *	380 *	380 *	390 *	310	330 *	300	3.07
1.5 m			660 *	660 *	510 *	510 *	440 *	410	400 *	310	330 *	270	3.27
1.0 m					690 *	550	520 *	400	440 *	300	340 *	250	3.36
0.5 m					830 *	530	590 *	380	470 *	300	370 *	250	3.36
0 m			730 *	730 *	880 *	520	630 *	380	490 *	290	410 *	260	3.26
-0.5 m	800 *	800 *	1.160 *	820	850 *	510	620 *	370	460 *	290	440 *	280	3.05
-1.0 m	1220 *	1220 *	1.090 *	830	740 *	520	530 *	380			450 *	340	2.7
-1.5 m			720 *	720 *	480 *	480 *					430 *	430 *	2.11

Lifting Capacities - DX17Z-7

	A	1.0 m		1.5 m		2.0 m		2.5 m		3.0 m		3.5 m		Max. reach		
B																A

CWT 1.8 t · Boom 1750 · Arm 1230 m · Shoe (Rubber) 230 mm · Blade up

3.0 m													320 *	320 *	2.5
2.5 m							310 *	310 *					280	260	2.98
2.0 m							330 *	330 *	280	260			230	220	3.28
1.5 m					420 *	420 *	360	350	270	260			210	200	3.47
1.0 m					500	470	350	330	260	250			200	190	3.55
0.5 m					470	440	340	320	260	240	210	200	200	190	3.55
0 m			710	650	450	420	320	310	250	240	200	190	200	190	3.45
-0.5 m	680 *	680 *	710	650	440	420	320	300	250	230			220	210	3.26
-1.0 m	1020 *	1020 *	720	660	450	420	320	300					250	240	2.95
-1.5 m	1450 *	1450 *	740	680	460	430							340	320	2.44

CWT 1.8 t · Boom 1750 · Arm 1230 m · Shoe (Rubber) 230 mm · Blade down

3.0 m													320 *	320 *	2.5
2.5 m							310 *	310 *					280 *	280 *	2.98
2.0 m							330 *	330 *	340 *	280			270 *	240	3.28
1.5 m					420 *	420 *	390 *	370	370 *	280			270 *	220	3.47
1.0 m					600 *	500	470 *	360	410 *	270	350 *	210	270 *	210	3.55
0.5 m					770 *	480	550 *	340	450 *	260	370 *	210	290 *	200	3.55
0 m			740 *	720	860 *	460	610 *	330	480 *	260			330 *	210	3.45
-0.5 m	680 *	680 *	1040 *	720	860 *	450	620 *	330	470 *	250			390 *	230	3.26
-1.0 m	1020 *	1020 *	1200 *	720	790 *	450	570 *	330					420 *	260	2.95
-1.5 m	1450 *	1450 *	900 *	740	610 *	460							420 *	350	2.44

CWT 2.6 t · Boom 1750 · Arm 1230 m · Shoe (Rubber) 230 mm · Blade up

3.0 m													320 *	320 *	2.5
2.5 m							310 *	310 *					280 *	280 *	2.98
2.0 m							330 *	330 *	310	290			260	250	3.28
1.5 m					420 *	420 *	390 *	380	300	290			240	230	3.47
1.0 m					550	520	390	370	300	280	230	220	230	220	3.55
0.5 m					520	490	380	350	290	270	230	220	220	210	3.55
0 m			740 *	730	510	470	360	340	280	270			230	220	3.45
-0.5 m	680 *	680 *	800	730	500	470	360	340	280	260			250	240	3.26
-1.0 m	1020 *	1020 *	810	740	500	470	360	340					290	270	2.95
-1.5 m	1450 *	1450 *	820	750	510	480							380	360	2.44

CWT 2.6 t · Boom 1750 · Arm 1230 m · Shoe (Rubber) 230 mm · Blade down

3.0 m													320 *	320 *	2.5
2.5 m							310 *	310 *					280 *	280 *	2.98
2.0 m							330 *	330 *	340 *	310			270 *	270 *	3.28
1.5 m					420 *	420 *	390 *	390 *	370 *	310			270 *	240	3.47
1.0 m					600 *	560	470 *	400	410 *	300	350 *	240	270 *	230	3.55
0.5 m					770 *	530	550 *	380	450 *	290	370 *	230	290 *	230	3.55
0 m			740 *	740 *	860 *	510	610 *	370	480 *	290			330 *	230	3.45
-0.5 m	680 *	680 *	1040 *	800	860 *	510	620 *	370	470 *	280			390 *	250	3.26
-1.0 m	1020 *	1020 *	1200 *	810	790 *	510	570 *	370					420 *	290	2.95
-1.5 m	1450 *	1450 *	900 *	820	610 *	520							420 *	390	2.44

Lifting Capacities - DX19-7 Canopy

	A	1.0 m		1.5 m		2.0 m		2.5 m		3.0 m		Max. reach		
B														A

CWT 0.65 t · Boom 1750 · Arm 1030 m · Shoe (Rubber) 230 mm · Blade up

2.5 m							370 *	370 *			350 *	350	2.77
2.0 m							380 *	380 *	320	310	300	290	3.1
1.5 m					510 *	510 *	420	400	320	300	270	260	3.3
1.0 m					570	540	410	390	310	300	260	250	3.39
0.5 m					550	510	400	380	300	290	250	240	3.39
0 m			690 *	690 *	530	500	390	370	300	290	260	250	3.29
-0.5 m	790 *	790 *	850	790	530	500	380	360	300	290	290	280	3.08
-1.0 m	1200 *	1200 *	860	800	540	510	390	370			340	330	2.73
-1.5 m	1290 *	1290 *	740 *	740 *	500 *	500 *					430 *	430 *	2.14

CWT 0.65 t · Boom 1750 · Arm 1030 m · Shoe (Rubber) 230 mm · Blade down

2.5 m							370 *	370 *			350 *	350 *	2.77
2.0 m							380 *	380 *	390 *	330	330 *	310	3.1
1.5 m					510 *	510 *	440 *	430	410 *	320	330 *	280	3.3
1.0 m					700 *	580	520 *	420	440 *	320	340 *	260	3.39
0.5 m					850 *	550	600 *	400	480 *	310	370 *	260	3.39
0 m			690 *	690 *	910 *	540	640 *	390	490 *	310	410 *	270	3.29
-0.5 m	790 *	790 *	1120 *	860	870 *	540	630 *	390	470 *	310	440 *	300	3.08
-1.0 m	1200 *	1200 *	1120 *	870	760 *	540	540 *	390			450 *	350	2.73
-1.5 m	1290 *	1290 *	740 *	740 *	500 *	500 *					430 *	430 *	2.14

	A	0.5 m		1.0 m		1.5 m		2.0 m		2.5 m		3.0 m		3.5 m		Max. reach		
B																		A

CWT 0.65 t · Boom 1750 · Arm 1230 m · Shoe (Rubber) 230 mm · Blade up

3.0 m									350 *	350 *					320 *	320 *	2.53
2.5 m											290 *	290 *			280 *	280 *	3.01
2.0 m											320	310			270 *	260	3.31
1.5 m									390 *	390 *	320	300			250	240	3.50
1.0 m							580	540	410	390	310	300	240	230	230	220	3.58
0.5 m							550	510	390	370	300	290	240	230	230	220	3.58
0 m					700 *	700 *	530	500	380	360	290	280			240	230	3.48
-0.5 m	650 *	650 *	680 *	680 *	840	770	520	490	380	360	290	280			260	250	3.29
-1.0 m	880 *	880 *	1000 *	1000 *	840	780	520	490	380	360					300	280	2.98
-1.5 m			1420 *	1420 *	860	790	530	500							390	370	2.47
-2.0 m															290*	290 *	1.45

CWT 0.65 t · Boom 1750 · Arm 1230 m · Shoe (Rubber) 230 mm · Blade down

3.0 m									350 *	350 *					320 *	320 *	2.53
2.5 m											290 *	290 *			280 *	280 *	3.01
2.0 m											340 *	330			270 *	260	3.31
1.5 m									390 *	390 *	370 *	320			250	240	3.50
1.0 m							620 *	580	480 *	420	410 *	320	370 *	250	230	220	3.58
0.5 m							790 *	550	560 *	400	450 *	310	390 *	250	230	220	3.58
0 m					700 *	700 *	880 *	540	620 *	390	480 *	300			240	230	3.48
-0.5 m	650 *	650 *	680 *	680 *	1000 *	840	890 *	530	630 *	380	480 *	300			260	250	3.29
-1.0 m	880 *	880 *	1000 *	1000 *	1240 *	850	810 *	530	580 *	380					300	280	2.98
-1.5 m			1420 *	1420 *	930	860	620 *	540							390	370	2.47
-2.0 m															290*	290 *	1.45

Lifting Capacities - DX19-7 Cab

	A	1.0 m		1.5 m		2.0 m		2.5 m		3.0 m		Max. reach		
B														A

CWT 0.65 t · Boom 1750 · Arm 1030 m · Shoe (Rubber) 230 mm · Blade up

2.5 m							370 *	370 *			350 *	350	2,77
2.0 m							380 *	380 *	320	310	300	290	3,1
1.5 m					510 *	510 *	420	400	320	300	270	260	3,3
1.0 m					570	540	410	390	310	300	260	250	3,39
0.5 m					550	510	400	380	300	290	250	240	3,39
0 m			690 *	690 *	530	500	390	370	300	290	260	250	3,29
-0.5 m	790 *	790 *	850	790	530	500	380	360	300	290	290	280	3,08
-1.0 m	1200 *	1200 *	860	800	540	510	390	370			340	330	2,73
-1.5 m	1290 *	1290 *	740 *	740 *	500 *	500 *					430 *	430 *	2,14

CWT 0.65 t · Boom 1750 · Arm 1030 m · Shoe (Rubber) 230 mm · Blade down

2.5 m							370 *	370 *			350 *	350 *	2,77
2.0 m							380 *	380 *	390 *	350	330 *	330	3,1
1.5 m					510 *	510 *	440 *	440 *	410 *	350	330 *	300	3,3
1.0 m					700 *	620	520 *	450	440 *	340	340 *	290	3,39
0.5 m					850 *	600	600 *	440	480 *	340	370 *	280	3,39
0 m			690 *	690 *	910 *	590	640 *	430	490 *	330	410 *	270	3,29
-0.5 m	790 *	790 *	1.120 *	930	870 *	590	630 *	430	470 *	330	440 *	320	3,08
-1.0 m	1200 *	1200 *	1.120 *	940	760 *	590	540 *	430			450 *	380	2,73
-1.5 m	1290 *	1290 *	740 *	740 *	500 *	500 *					430 *	430 *	2,14

	A	0.5 m		1.0 m		1.5 m		2.0 m		2.5 m		3.0 m		3.5 m		Max. reach		
B																		A

CWT 0.65 t · Boom 1750 · Arm 1230 m · Shoe (Rubber) 230 mm · Blade up

3.0 m									350 *	350 *					320 *	320 *	2,53
2.5 m											290 *	290 *			280 *	280 *	3,01
2.0 m											340 *	330			270 *	270 *	3,31
1.5 m									390 *	390 *	350	330			270 *	270 *	3,50
1.0 m							620 *	590	440	420	340	320	270	250	260	240	3,58
0.5 m							590	560	430	410	330	310	260	250	250	240	3,58
0 m					700 *	700 *	580	540	420	390	320	310			260	250	3,48
-0.5 m	650 *	650 *	680 *	680 *	910	840	570	530	410	390	320	300			280	270	3,29
-1.0 m	880 *	880 *	1000 *	1000 *	920	840	570	540	410	390					330	310	2,98
-1.5 m			1420 *	1420 *	903 *	860	580	550							420 *	410	2,47
-2.0 m															290 *	290 *	1,45

CWT 0.65 t · Boom 1750 · Arm 1230 m · Shoe (Rubber) 230 mm · Blade down

3.0 m									350 *	350 *					320 *	320 *	2,53
2.5 m											290 *	290 *			280 *	280 *	3,01
2.0 m											340 *	340 *			270 *	270 *	3,31
1.5 m									390 *	390 *	370 *	350			270 *	270 *	3,50
1.0 m							620 *	620 *	480 *	450	410 *	340	370 *	270	270 *	260	3,58
0.5 m							790 *	600	560 *	430	450 *	330	390 *	270	290 *	260	3,58
0 m					700 *	700 *	880 *	580	620 *	420	480 *	330			330 *	270	3,48
-0.5 m	650 *	650 *	680 *	680 *	1000 *	910	890 *	580	630 *	420	480 *	330			390 *	290	3,29
-1.0 m	880 *	880 *	1000 *	1000 *	1240 *	920	810 *	580	580 *	420					420 *	330	2,98
-1.5 m			1420 *	1420 *	930 *	930 *	620 *	590							420 *	420 *	2,47
-2.0 m															290 *	290 *	1,45

Bucket

	Standard Arm & HVAC Cabin (US20)	Long Arm & HVAC Cabin (US21)	Standard Arm & Canopy (US30)	Long Arm & Canopy (US31)
Boom	6' 10" (2090 mm)			
Arm	3' 7" (1100 mm)	4' 3" (1300 mm)	3' 7" (1100 mm)	4' 3" (1300 mm)
Shoe size	11.8" (300 mm)			
Track type	Fixed (rubber)			

Bucket Type	Model	Capacity* yd³ (m³)	Width in. (mm)	Weight lb. (kg)	Height in. (mm)	Length in. (mm)	Number of teeth	Connection/ Type
Quick hitch Ditching (QH03GB)	DC03GB-30QH	0.18 (0.14)	30 (762)	214 (97)	17.625 (447.6)	23.625 (600)	–	Quick hitch 1.25
	DC03GB-36QH	0.22 (0.17)	36 (914.4)	208 (94.3)				
	DC03GB-42QH	0.26 (0.19)	42 (1066.8)	287 (130.2)				
Quick hitch Heavy-Duty (QH03GB)	HD03GB-12QH	0.06 (0.04)	12 (304.8)	123 (55.8)	18.375 (466.7)	30.875 (784.2)	3	Quick hitch 1.25
	HD03GB-16QH	0.09 (0.07)	16 (406.4)	154 (69.8)			4	
	HD03GB-18QH	0.1 (0.07)	18 (457.2)	161 (73)			4	
	HD03GB-24QH	0.14 (0.10)	24 (609.6)	198 (89.8)			5	
Pin-on Ditching	DC02GB-30	0.18 (0.14)	31 (787.4)	235 (106)	23.375 (593.7)	26.75 (679.4)	–	Pin-on
	DC02GB-36	0.23 (0.17)	37 (939.8)	270 (122)				
	DC02GB-42	0.26 (0.2)	43 (1092.2)	300 (136)				
Pin-on Heavy-Duty	HD02GB-12	0.06 (0.04)	13 (330.2)	150 (68)	22.375 (568.3)	32 (812.8)	3	Pin-on
	HD02GB-16	0.09 (0.07)	17 (431.8)	175 (79)			4	
	HD02GB-18	0.1 (0.07)	19 (482.6)	200 (91)			4	
	HD02GB-20	0.11 (0.08)	21 (533.4)	205 (93)			4	
	HD02GB-24	0.14 (0.10)	25 (635)	220 (100)			5	

*Capacity based on ISO 7451 and heaped with a 1:1 angle of repose

Equipped with bolt-on wear shrouds

Equipped with bolt-on teeth

Equipped with bolt-on cutting edge

These recommendations are given as a guide only and based on typical operating conditions.

Please consult with your DEVELON dealer to properly match buckets and attachments for the application.

Standard & Optional equipment

Standard	DX17Z-7
4 pillar canopy	▪
1750 mm boom	▪
1030 mm arm	▪
Non additional Counterweight	▪
Non quick coupler piping	▪
5" digital screen	▪
Boom LED light	▪
Rotating Beacon	▪
Travel Alarm	▪
Develon Fleet Management	▪

Optional	DX17Z-7
1230 mm arm	▪
80 kg additional Counterweight	▪
Quick coupler piping	▪

Standard	DX19-7
4 pillar canopy	▪
1750 mm boom	▪
1030 mm arm	▪
Non additional Counterweight	▪
Non quick coupler piping	▪
5" digital screen	▪
Boom LED light	▪
Front LED light (Cab)	▪
Rotating Beacon	▪
Travel Alarm	▪
Develon Fleet Management	▪

Optional	DX19-7
Cab with heater	▪
1230 mm arm	▪
Quick coupler piping	▪

Powered by **Innovation**

DEVELON

Space for dealer's stamp

HD Hyundai Infracore Europe s.r.o.
IBC – Pobrezni 620/3,
18600 Praha 8 – Karlin, Czechia

©2024 HD Hyundai Infracore. All rights reserved.

D4601310-EN (04-24)

Certain specification(s) are based on engineering calculations and are not actual measurements. Specification(s) are provided for comparison purposes only and are subject to change without notice. Specification(s) for your individual Develon equipment will vary based on normal variations in design, manufacturing, operating conditions, and other factors. Pictures of Develon units may show other than standard equipment.