Weight	17,4 tons
Bucket capacity	760 litre
Nominal power	104 kW
Interchangeable battery capacity	400 kWh

ELECTRIC DX165w

Wheeled excavator



Meet the new generation wheeled excavator

ELECTRIC
DX165W

Lift your company to the next level with the DX165W Electric!
The DX165W Electric wheeled excavator is not only exceptionally powerful but also completely emission-free.
What more could you ask for?

Top performances and capacity

The ability to be more productive

The DX1665W Electric has a high constant power motor. The Danfoss PM (permanent magnet) electric motor has been specially developed for this wheeled excavator and delivers high torque at a high efficiency of 96%. The motor is maintenance-free and has a long lifespan. The nominal power is 104 kW and the maximum torque is 600 Nm.

Features and benefits

- Extremely compact and robust structure
- Highest efficiency (over the entire operating range) on the market
- Up to IP67 enclosure class
- Liquid cooled



Emission-free and high productivity

The electric wheeled excavator is a machine with many qualities. Here are some of its notable features and points of intelligence listed below.

High productivity and low costs

Higher productivity and low energy consumption in an efficient and comfortable working environment.

Plug and Play

Available 2D and 3D GPS* for machine control Comfort with ready-to-use kits for major brands (e.g. Trimble, Topcon, Leica and Makin).

**Not available as standard, only as an option.*

Safety

360° camera system*, large side mirrors, strong halogen or LED work lights and nonslip steps and platforms. Railing on the upperstructure, ultrasonic obstacle indicator (option), travel alarm: your safety is our priority.

**Not available as standard, only as an option.*

Uptime

Uptime 10 - 14 hours* with a Powerbox 400 with a capacity of 400 kWh. Based on field test results from “de bouwplaats van morgen”.

**Subject to conditions and environment.*

Comfort

One of the most spacious cabins in the market, with low noise- and vibration levels and excellent all-around visibility. Fully adjustable heated seat with air suspension, standard air conditioning with climate control.



Energy

Powerbox 400

Thanks to the two easy to swap Powerbox 400 battery packs and the fact that the machine can also run on one individual Powerbox 400, it is possible to use the machine 24/7. Swapping the two Powerbox 400 is just as quick as refueling your diesel machine. Each battery pack consists of LFP battery technology. The nominal system voltage is 600 V DC and the available capacity per battery pack is 400 kWh. By using the high voltage system, there is less loss and the batteries achieve greater efficiency.

The Powerbox 400 in the electric excavator is one of the most important components of the machine. We deliver a battery swapping system as a standard in the DX165W Electric. This ensures continuous uptime of the machine and allows you to recharge whenever and wherever you want, without moving the entire machine.

Charging facility

In addition to using the electric crawler excavator, it is equally important to have your power supply well arranged. It is important to check in advance how the charging facility for your Powerbox 400 at the jobsite is arranged. For larger machines, you need to have a charging outlet of 380 VAC power current. Charging on a mains (grid) connection of 220 VAC is also possible, but it will take longer for your Powerbox 400 to be fully charged again.

If you have a power supply at your company, you can quite easily have the currents (amperages) adjusted as required by the network administrator. The Powerbox 400 is equipped as standard with a DC fast charge function that allows you to recharge quickly.

The overview below shows the charging time*.

**Charge times shown are from completely empty: 0% to completely full: 100%.*

120 kW - DC

3h 20min charging time

380 V / 63 A - AC

8h 45min charging time

Ask about the charging options



Lifespan

Our batteries consist of Lithium Ion batteries of the LFP (Lithium Iron Phosphate) type, which means they are 100% recyclable. An End of Life (EoL) declaration is issued for the batteries. In the application as the Powerbox 400 batteries are used, they have a lifespan of 3,000 charging cycles.


engcon

Available for a full working day

The Electric DX165W wheeled excavator has an uptime of 10 - 14 hours*, which means that the user can work with it for a whole day without having to recharge or change a battery in the meantime. You can charge at a normal charging speed at night, with the batteries being strained as little as possible, which benefits the lifespan.

** Subject to circumstances and environment. During practical tests of the project "de bouwplaats van morgen", led by TNO, the following results were determined.*

Active Climate Control System

Every Powerbox 400 is standard equipped with an Active Climate Control System. This keeps the battery at an optimal operating temperature at all times so that the output power is constant, whether it is plus 40 degrees Celsius outside in the blazing sun or minus 25 degrees Celsius in the freezing cold. Furthermore, this also optimizes the battery's lifespan.

Multi functional Powerbox 400

The interchangeable Powerbox 400 in the DX165W Electric have a patented system on board which makes it possible to use the interchangeable battery not only for this excavator, but also as a "standalone" electric generator (in combination with our add-ons) for the energy supply on the construction site or elsewhere.

Reliability

The drivetrain of the DX165W Electric consists of main components that are developed and manufactured by Top Tier suppliers. As a result, you can rely on excellent uptime of replacement parts and good after sales worldwide.

Interchangeability

Because the Powerbox 400 battery is built universally, this can be used in all of our different models of excavators. This allows you to save costs when working with multiple electric machines and have varying energy needs.

Maximum flexibility

You decide where and when to charge the Powerbox 400 yourself. While the machine remains at work, you can take the Powerbox 400 interchangeable battery to the most convenient charging location.



Certification

Ingress Protection

An Ingress Protection (IP) rating is a method used to indicate the degree of protection provided by the enclosure material (or other objects). For example, an IP value indicates whether the material is resistant to the ingress of water, objects or dust. This is important to protect the mechanical equipment.

ISO 5006-standards

This international standard specifies a test method for determining and evaluating the visibility of the operator. By using cameras and mirrors, the user does not lose any overview.

Safety guaranteed

Working with electrical machines requires compliance with a lot of laws and regulations. It is hugely important to be able to guarantee health and safety guarantee for the operator, bystanders and people responsible for the maintenance of these machines. As this is a new technology in our industry we work closely with end-users, industry associations, NEN committees, and implement additional safety requirements for working with high-voltage vehicles. In order to comply with the type approval of an electric vehicle, certain safety requirements must be respected, such as UNECE R10, 2006/42/EG, UNECE R100.03 vehicle, IP65, and NEN ISO 5006-standards are examples of specific safety requirements.

UNECE R10 (EMC)

Automotive “EMC” stands for Electro Magnetic Compatibility, “R10” is a component, and “automotive” refers to the motor vehicle industry. The EMC R10 Automotive certification includes a variety of type approval tests. This includes reducing harmful electromagnetic radiation sources within the legally defined limits. This means that the system is tested for compliance with all European automotive electronics regulations.

UNECE R100.03

This standard focuses on preventing contact with high-voltage components. Our batteries also meet the even stricter requirements of the R100.03 regarding REESS (Rechargeable Energy Storage Systems) systems. While not mandatory, it adds an extra level of safety.





Batteries

Mega capacity

The wheeled crawler is equipped with one interchangeable battery, also known as Powerbox 400. These Powerbox 400 provide a capacity up to 400 kWh with a nominal system voltage of 600 V. By utilizing the highvoltage system, there is less loss and greater efficiency achieved through the Powerbox 400. The interchangeable Powerbox 400 in the electric machines are one of the most important components of the machine.

Powerbox 400

Our Powerbox 400 consist of LFP-modules, which are fully recyclable. An EoL (End of Life) declaration is issued for the Powerbox 400. In the current application, where the Powerbox 400 have a temperature management system (active climate control system), a lifespan of 3,000 charging cycles is provided. At that point, the Powerbox 400 still retains 80% of its original capacity, making it suitable for a second life.

Sustainability

The second life of the battery involves residential or commercial energy storage systems in combination with solar panels or wind turbines. These battery can serve as energy storage system for an additional period of ten years. After this, the battery reach the end of his life (End of Life) and can be recycled up to 100%.

Patent

The patent granted to our Powerboxes concerns a unique technical design that allows the battery to be used both on and off the machine. The flexible nature of the battery ensures that the battery can be charged and discharged separately from the machine.

TECHNICAL SPECIFICATIONS

ELECTRIC DX165W

Electric motor

The Danfoss electric motor is based on Synchronous Reluctance Assisted Permanent Magnet (SRPM) technology. It is liquid cooled and designed to operate in harsh operating conditions. Due to its compact dimensions, it has a lower weight and a higher efficiency compared to conventional electric motors.

Nominal power
104 kW

Maximum torque
600 Nm

Undercarriage

The excavators are built exceptionally strong using high-quality materials with a long lifespan. All welds are designed to minimize material stress.

- Heavy-duty front axle with automatic or axle lock with pendulum (on/off/auto).

Weight

Weight
17,4 tons

Based on the design of this machine

Hydraulic system

The electronic power optimization system (e-EPOS) is the brain of the excavator. It minimizes energy consumption and optimizes the efficiency of the hydraulic system under all operating conditions. In order to harmonize the electric motor and the hydraulics, the e-EPOS is connected to the electronic control unit of the electric motor via a data connection.

- The hydraulic system allows independent or combined operation;
- Two travel speeds provide either more torque or higher speed;
- Cross-sensing and energy-saving pump system;
- Automatic system for lower rpm;
- Four operating modes and four power modes;
- Flow rate and pressure control of auxiliary hydraulics from the control panel;
- Computer-assisted control of the pump flow.

Hydraulic cylinders

Piston rods and cylinders made of high-strength steel. All cylinders are equipped with a shock absorbing mechanism to ensure shock-free operation and longer piston life.

Maximum system pressure

Work
350 gf/cm²

Slewing
275 gf/cm²

Driving
370 gf/cm²

Additional power
370 kgf/cm²

Driving

The wheels are driven via a powershift transmission with two speeds driven by an axial piston motor. In addition to the powershift transmission with two-speed transmission, there is an economy mode and a creep speed switch. Via a button in the work mode to switch from high to low. Two travel speeds offer the choice of more torque or a higher speed.

Driving speed (crawl - low – high)
3,5 - 10 - 30 km/u

Maximum traction
10 tons

Minimum turning circle
6,4 meters

Maximum climbing capability
32°/ 62%

Slewing mechanism

For the slewing mechanism, an axial piston motor is used to drive a two-stage planetary gear in an oil bath for maximum torque.

- Slewing bearing: single row sliding ball bearing, with induction-hardened internal gear;
- Internal gear and pinion immersed in lubricant;
- Due to the higher swing torque, the swing time is shorter;
- The swing brake for parking is activated by a spring and hydraulically released.

Maximum slewing speed
13,5 rpm

Maximum slewing torque
3565 kgf - m

Cylinders

Sort	Number of	Bore x rod diameter x stroke (mm)
Boom under	1	140 x 85 x 720
Boom above	1	110 x 75 x 1035
Arm	1	115 x 80 x 1068
Bin	1	100 x 70 x 900
Dozer blade	2	100 x 60 x 204
Stabilizer	2	110 x 70 x 438



TECHNICAL SPECIFICATIONS

ELECTRIC DX165w

Battery

PATENTED

Designed to deliver superior performance with the highest electrical efficiency, the Powerbox 400 fully complies with all necessary safety certifications.

Model
Powerbox 400

Gross capacity
400 kWh

Maximum load capacity
120 kW

Charge protocol
SPEC 70121 and ISO15118

Nominal voltage system
600 V DC

Certifications
- R100.03
- IP68

Charging options
2 x type 2 AC charging connector on the machine in combination with 2 x 22kW On Board Chargers.
1 x CCS type 2 DC fastcharge connector directly on the Powerbox 400 in combination with 120kW Chargers.

Battery type
LFP

Temperature
Active Climate Control System

Charging

Our battery technologies use “plug & charge”, the DIN SPEC 70121 and ISO15118 communication protocol for smart charging. This enables communication between vehicles and charging infrastructure and it allows smart charging and dynamic load management. This advanced process not only optimizes the battery during charging and discharging, but also minimizes network load, which is essential for efficiency and sustainability.

AC charging (on the machine)

Charging connector
2 x Type 2

Charging capacity
2 x 22 kW AC

Charging time (380 V/ 63 A)
8h 45min



Type 2

DC charging

Charging connector
Combo CCS Type 2

Charging capacity
120 kW DC

Charging time (0 - 90%)
3h 20min



Combo CCS Type 2

Patent

The granted patent that applies to our Powerboxes is a unique technical design that makes it possible to use the battery in the machine, but can also be used as a “stand-alone” battery. This means that the battery can be charged and discharged without a machine. The flexible nature of the battery ensures that the battery can be charged and discharged separately from the machine.



TECHNICAL SPECIFICATIONS

ELECTRIC DX165W

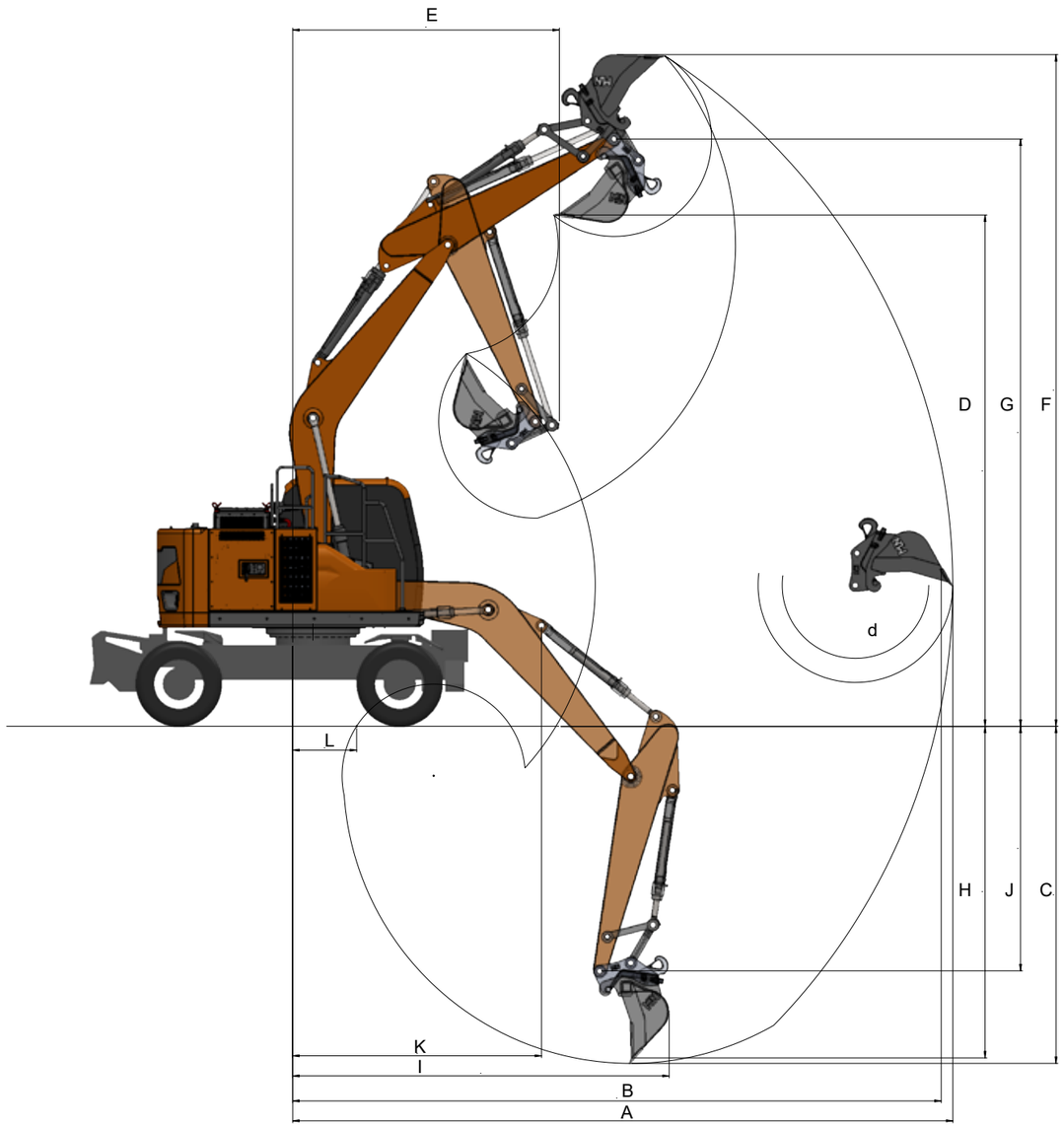

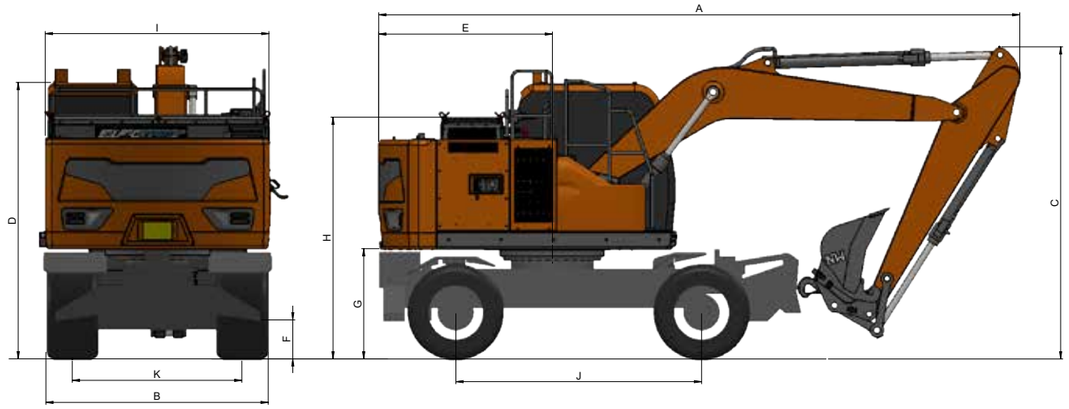

Dimensions (mm)		Mono boom		Buckling boom	
Boom length		**4600**		**4988**	
Arm length		**2100**	**2500**	**2100**	**2500**
A	Transport length	8251	8205	8646	8661
B	Transport width	2490	2490	2490	2490
C	Transport height (boom)	2685	3045	2648	2795
C	Transport height (hose)	2865	3211	2688	2834
D	Height to top of cabin	3102	3102	3102	3102
	Height above cabin (railing)	3284	3284	3284	3284
E	Swing radius rear	1999	1999	1999	1999
F	Ground clearance	348	348	348	348
G	Ground clearance counterweight	1215	1215	1215	1215
H	Hood height	2760	2760	2760	2760
I	Width upper carriace	2490	2490	2490	2490
J	Wheelbase	2800	2800	2800	2800
K	Track width	1944	1944	1944	1944
	Transport length	7397,7	7225,7	6098,7	6164,7
	Transport height (boom)	3539	3867	3988	3988
	Transport height (hose)	3608	3766	3937	3937



ELECTRIC

Specifications and design are subject to change without notice. Images of the products in the brochure may differ from the standard version.