## Demolition Excavators

# DX140RDM-7

| | |
|---|---|
| Maximum power | 115 hp |
| Operating weight | 14.4 t |
| Max. tool weight | 1450 kg |
| Max. height at pin | 16 m |




DEVELON

DEVELON

## Continuous evolution, for better.

We trace our roots to 1937 as one of Korea's first large-scale machine plants. During that time, we have consistently delivered earth-moving equipment to build critical infrastructure for the betterment of communities, societies and the wider world.

## We are Develon.

Develon is a bold name that reflects our core ambition to continue developing onwards and leaving behind a positive footprint in our world. Moving forward, we will continue providing innovative products and solutions that advance the world we live in today.



# From demolition to reinvention

**Safety**
Rear and side cameras and large side mirrors, powerful lighting, & anti-slip steps and platforms. Guard rails on upper structure. FOGS (Falling Object Guard Structure) cab with top and front cab guards (ISO 10262). Main protection for HRD boom piping are provided as standard.

**Tilting Cab**
The 30° titling cab provides better visibility and comfort and reduces fatigue during high elevation demolition work.

**Stability safety System**
The tipping limit is calculated according to the attached tool. The system warns with alarm when approaching the safety limit, and stops the movement of cylinders when the limit is reached. Hydraulic movement limitation can be disabled (where allowed by local regulations).

**Boom Joint System**
DX140RDM-7 can be equipped with either monolithic boom or modular boom design. Hydraulic lock mechanism provide customers with a complete, flexible solution that allows them to use the same excavator for applications on-site in addition to demolition.

**360° All-around view camera (AVM) system**
The 360° All-around view camera (AVM) system gives you full view of the machine's surroundings.

**Comfort**
One of the most spacious cabs in the market, with low noise & vibration levels and excellent all-round visibility. Fully adjustable heated air suspension seat, air conditioning with climate control.

**Advanced filtration**
Highest efficiency filters & cleaners remove water, dust & particles to protect your investment optimally.

**Hydraulically Adjustable Track**
Retractable undercarriage allows keeping compact outline of the machine for transportation while offering unparalleled stability on jobsite.

**Controllability**
Exclusive jog shuttle button, 4 work & 4 power modes, proportional control, user-friendly Develon Smart Touch screen 8'' which integrates all functions and settings of your machine in one place.

**Additional counterweight**
Extra counterweight of 1t adds to the machine stability. 2 m boom extension is available upon request for machines with interchangeable arm.


DEVELON
DX140ROM




# Compact design immense strength




# Ideal for urban environment

Compact design with reduced tail swing in demolition excavators offers several key advantages. Firstly, it enhances maneuverability in confined spaces, allowing operators to work efficiently in urban environments or tight construction sites without risking collisions with nearby structures.

**Safe and effective**
Reduced tail swing minimizes the machine's footprint, improving safety for workers on the ground by reducing the likelihood of accidental contact. This design also allows for more precise control during demolition, enhancing productivity and ensuring the demolition process is both safe and efficient.

**Transportation made easy**
Compact design also offers significant advantages for transportation. DX140RDM-7 is easier to transport due to its smaller size and lighter weight, which can reduce transportation costs and simplify logistics. They can be loaded onto standard trailers without requiring special permits or escorts, saving time and money.
Furthermore, the reduced size allows for easier access to sites with limited entry points, ensuring the excavator can be deployed quickly and efficiently to various job locations.

# Keeping demolition works safe

Develon demolition excavators are powerful designed for power for 2 main reasons: the power to tear down the toughest structures, and the stability to keep the operator completely safe.

### Tilting cab

Thanks to the tilting cab, the operator can maintain a comfortable posture and experience less fatigue during demolition work. Safety valves are located in the cab and behind it. In case of an emergency, the cab can be lowered by the operator or from outside the cab.

### Your safety is our priority

- FOGS: Protects the operator from falling or flying objects
- Rear and side view camera
- All round view monitor 360° for maximum safety in narrow environments
- Boom piping protection against falling debris are standard

### Hydraulically adjustable track (extended track)

- Best stress distribution and durability thanks to the circular shape and self lubricated system.
- Squared base for best working diagram at 360°.

### Stability warning system

4 angle sensors and 1 pressure sensor calculate in real time the machine relative position with its tipping limit weight, even if working tool is changed and warns the operator safety by monitoring the exact position of the machine and the work tool. The system warns the operator when the safety limit is being approached; and the system stops the machine's operation when the limit is reached. Thanks to safety key behind the seat operator can disactivate the hydraulic block.



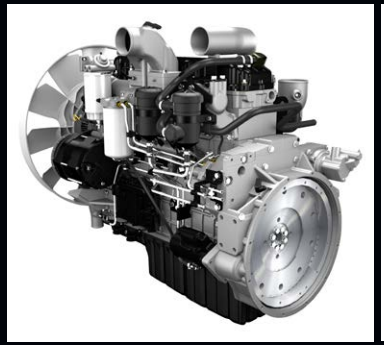

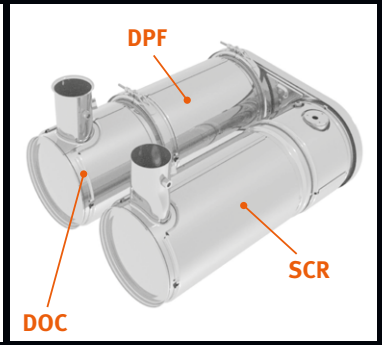




# Work excellence, ultimate safety




# Master in demolition, partner in comfort

 * Please note that cabin pictures in the brochure may vary due to engineering changes across different serial numbers.

1. Anti tipping system
2. FOGS
3. Large sun roof
4. Improved visibility on the bottom right
5. Joysticks and switches integrated in adjustable control consoles
6. Separate seat height adjustment lever and cushion tilting function
7. Pedal for auxiliary control 1 & 2 ways, rotation line and drainage line
8. Straight ergonomic pedals

## Best-in-class operator environment

The DX140RDM-7 is designed to provide you with the best possible working conditions. The sophisticated state-of-the-art ROPS cab is pressurized and ISO-certified for your safety. A high-quality heated seat (and even seat cooling available as an option) with air suspension provides maximum operator comfort.






### Unrivalled comfort

Comfortably seated, you benefit from a clear all-round view of the work site and have easy access to several storage compartments.
Pedals, joysticks and armrests have all been designed for operator comfort and efficiency. Noise and vibration levels are remarkably low, and the effectiveness of the air conditioning and automatic climate control has been increased significantly. These features allow you to continue working for hours on end without feeling tired. Finally, thanks to the hands-free system, you won't miss any important call, and you'll stay available to your customers, as you operate the machine.

### Cab suspension

The cab's suspension system (CabSus mount) dampens vibrations and provides outstanding protection against impact. This system absorbs shocks and vibrations much more effectively than a conventional silentblock suspension system.

### Develon SMART TOUCH

The wide 8" touchscreen provides easy scrolling through the different menus, including power settings and auxiliary hydraulics settings. It also allows you to connect a Bluetooth device or listen to your favorite radio station.

### 360° all-around view camera (AVM) system (Option)

The 360° all-around view camera (AVM) system gives you full view of the machine's surroundings.

# Develon Fleet Management › Management on the job site › Work efficiency management › Preventive management › Proactive service



# Monitor your equipment from anywhere

To compete and succeed, your equipment needs to maximize job site productivity and the bottom line. Develon machines do both. To ensure a high return on investment, we add more premium features as standard equipment on every model. Our standard features are often options that other manufacturers only provide at extra cost. By including them as standard, Develon gives you a competitive edge — helping operators work more efficiently and improving safety during long days on the field.

**Telematics terminal**
Terminal device is installed and connected to a machine to capture machine data.

**Telecommunication**
Develon provides dual-mode (Mobile, Satelite) communication to maximize communication coverage.

**Develon Fleet Management WEB**
Users can monitor machine status from Develon Fleet Management Web.

| | |
|---|---|
| **Operation trend** | Total operation hours and operation hours by mode. |
| **Fuel efficiency*** | Fuel level and fuel consumption |
| **Reports & Location** | Operation report & utilization. GPS and geo-fence. |
| **Warning & Alert** | Detect machine warnings, antenna disconnection, and geo/time fence |
| **Filter & Oil management** | Preventive maintenance by item replacement cycle. |

*Functions may not be applied to all models. Please, contact your sales representative for more information on this feature.

# Simple maintenance for maximum uptime

### Maintenance access made simple

- Large guard rails are installed along with anti-slip steps and plates, for safer, easier access to the whole upper structure.
- The air conditioning filter is placed on the side of the cab for easy access. The filter's cover can be locked and opened with a key.
- A battery cut-off switch makes it easy to disconnect the battery for long-term storage.
- The hour meter display can be easily checked from ground level.
- Shut-off valves have been fitted on the pre-filter piping line and fuel tank drain piping to make servicing easier and prevent pollution from leakage.
- Engine parts can be easily reached via the top and side panels.
- For extra accessibility and servicing convenience, all filters (engine oil filter, fuel pre-filters, fuel filters and pilot filter) are located in the pump compartment.
- An electric transfer pump for initial priming of fuel filters is featured as standard.
- Fine mesh on the side doors and on the cooler itself filters the intake air going to the cooler for better cooling performance and reduced maintenance.

### AdBlue® tank

Connected to the ECU, sensors in the tank detect low levels of AdBlue® or any other system malfunction.
Also equipped with an AdBlue® level indicator during refilling, to avoid over filling

### Centralized greasing points

To make maintenance easier, the greasing points have been centralized. An automatic lubrication system is available as an option.

### Hydraulically Adjustable track

Retractable undercarriage allows keeping compact transport dimensions, while offering great stability on jobsite. Circular shape of the extensions brings best possible stress distribution and, together with self-lubricating system, considerable durability.

### Undercarriage durability

- The chain is composed of sealed, self-lubricating links for long-term dependability.
- The track spring and idler are joined for long-lasting performance and easy maintenance
- Cast steel heavy-duty sprockets guarantee the highest resistance
- The track rollers are lubricated for life
- Road liner shoes equipped as standard are ideal for operation in urban environment.



# Arm and Boom configuration

## Boom Solutions Designed for Your Project

Develon DX140RDM-7 offer versatile configuration options for booms to suit different project needs. Basic choice is the monolithic boom configuration, where the excavator is solely equipped with a dedicated demolition boom bringing great performance, easy operation and lower cost. Alternatively, the interchangeable boom configuration provides greater flexibility by allowing operators to swap between various boom types. Options include the high-reach demolition boom, ideal for reaching tall structures effectively; the long-reach boom without articulation, and the standard digging arm for traditional excavation tasks. This versatility empowers operators to adapt quickly to diverse job requirements, enhancing efficiency and productivity on the site.




Monolithic boom




Digging arm, 2 m extension



Interchangeable boom, demolition arm, 2 m extension




Long reach arm

DEVELON

TECHNICAL SPECIFICATIONS

# DX140RDM-7




## Engine

| | |
|---|---|
| Model | Develon G2 D34 |
| No. of cylinders | 4 |
| Rated power at 2000 rpm | |
| SAE J1995 | 86 kW (115 hp) |
| SAE J1349 | 81.6 kW (109 hp) |
| Max. torque at 1400 rpm | 46.9 kgf·m |
| Idle (low - high) | 950 [±10] - 2000 [±25] rpm |
| Displacement | 3409 $cm^3$ |
| Bore × stroke | 98 mm × 113 mm |
| Starter | 24 V / 5 kW |
| Batteries - Alternator | 2 × 12 V, 100 Ah – 24 V, 100 A |
| Air cleaner | Double element air cleaner |

## Hydraulics

Main pump
Type: 2 × variable displacement tandem axial piston pump

| | |
|---|---|
| Max. flow rate at 2000 rpm | 2 × 114 l/min |
| Pilot pump: Gear pump | |
| Max. flow rate at 2000 rpm | 30 l/min |
| Relief valve settings | |
| Implement<br>Travel<br>Swing<br>Pilot | 330 $kgf/cm^2$<br>350 $kgf/cm^2$<br>275 $kgf/cm^2$<br>40 $kgf/cm^2$ |

## Swing mechanism

| | |
|---|---|
| Maximum swing speed | 10.13 rpm |
| Maximum swing torque | 4888 kgf·m |

## Drive

| | |
|---|---|
| Travel speed (low - high) | 2.9 - 4.7 km/h |
| Maximum traction | 15.2 t |
| Maximum gradeability | 35° / 70% |

## Fluid capacities

| | |
|---|---|
| Fuel tank | 265 l |
| Cooling system (radiator) | 27.1 l |
| AdBlue® (DEF) tank | 25 l |
| Hydraulic oil tank | 145 l |
| Engine oil | 12.6 l |
| Swing drive | 3 l |
| Travel device | 2 × 2 l |

# Dimensions

| Dimensions & Weight – Base machine | | Unit | Monolithic | Interchangeable |
|---|---|---|---|---|
| **A** | Width superstructure | mm | 2327 | 2327 |
| **B** | Overall height | mm | 2891 | 2891 |
| **C** | Overall height (incl. FOGS) | mm | 3020 | 3020 |
| **D** | Tail swing radius | mm | 1525 | 1525 |
| **F** | Minimum counterweight clearance* | mm | 940 | 940 |
| **G** | Tumbler length | mm | 3385 | 3385 |
| **H** | Track length (with 2 step extension) | mm | 4130 | 4130 |
| **I** | Track gauge (retracted) | mm | 2040 | 2040 |
| **I'** | Track gauge (extended) | mm | 3240 | 3240 |
| **J** | Track width (retracted) | mm | 2540 | 2540 |
| **J'** | Track width (extended) | mm | 3740 | 3740 |
| **K** | Shoe width | mm | 500 | 500 |
| **L** | Minimum ground clearance* | mm | 370 | 370 |
| **M** | Overall length (without arm) | mm | N/A | 4304 |
| | Base machine weight (without arm) | kg | N/A | 19500 |
| | Tilting Angle (Cabin) | ° | 30 | 30 |

* with roadliner shoes

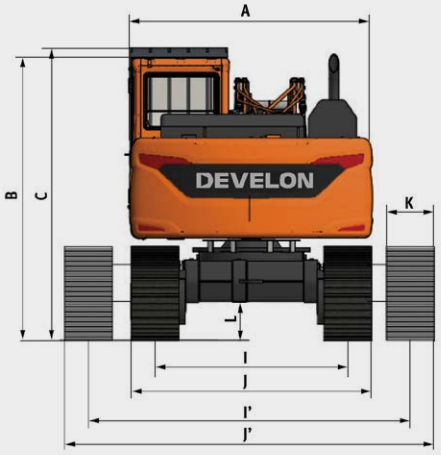


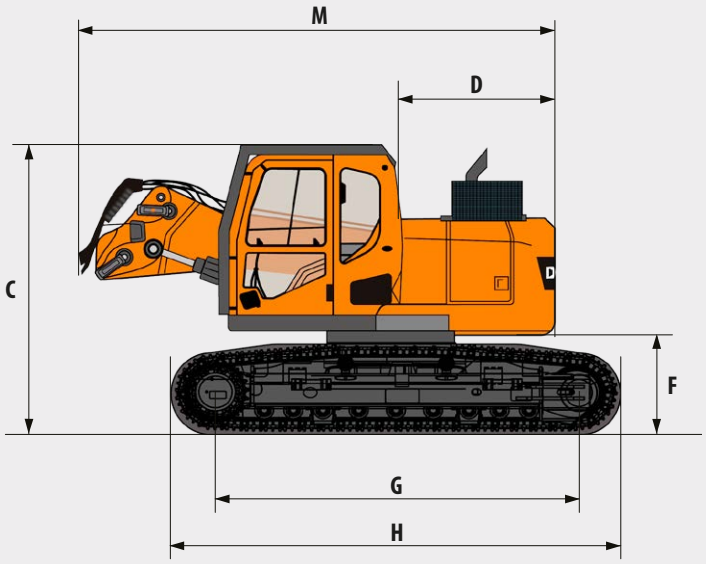


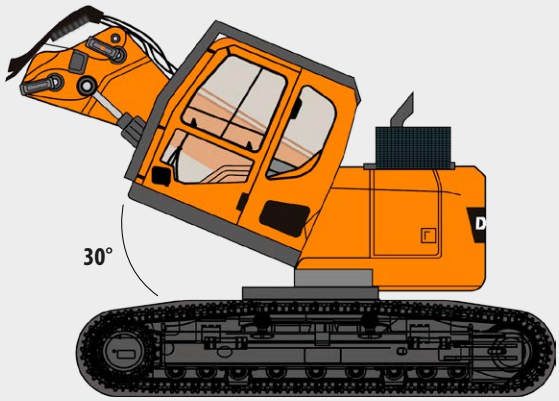

# Demolition Configuration (HRD)

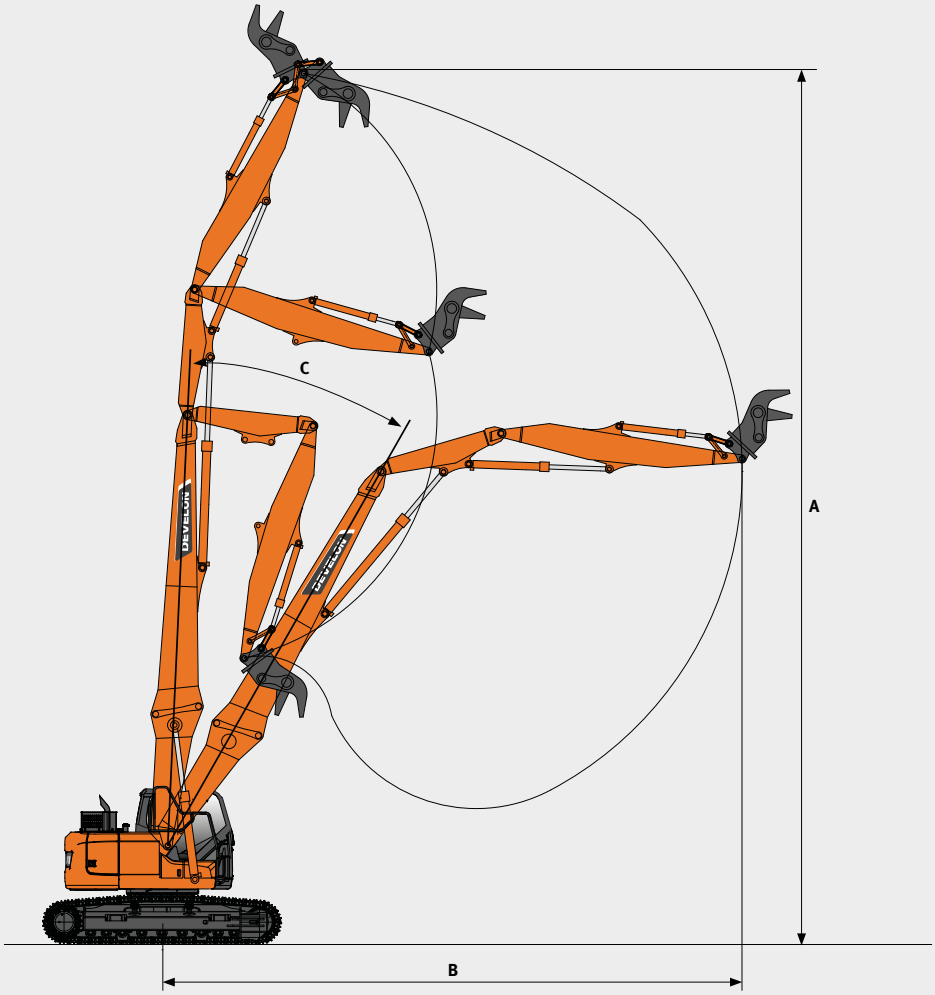


| Demolition Configuration (HRD) | Unit | Monolithic | Interchangeable |
|---|---|---|---|
| Max tool weight | kg | 1450 | 1450 |
| Variable undercarriage width | mm | 2540-3740 | 2540-3740 |

| Working Range (HRD) | | Unit | Monolithic | Interchangeable |
|---|---|---|---|---|
| **A** | Maximum height at pin | mm | 16000 | 14200 |
| **B** | Maximum reach at pin* | mm | 10700 | 10400 |
| **C** | Maximum height (2:1 line) | mm | 14000 | 11800 |

* the maximum reach values refer to 360°

# Dimensions

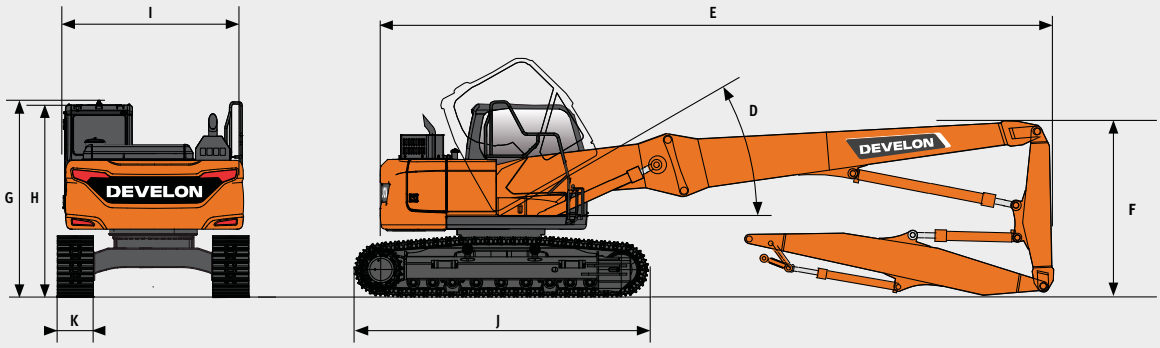


| Transport Dimensions & Weights | | Unit | Monolithic | Interchangeable |
|---|---|---|---|---|
| **D** | Cab tilting angle | ° | 30 | 30 |
| **E** | Overall length (incl. High Reach Demolition boom) | mm | 10500 | 9235 |
| **F** | Boom height | mm | 2671 | 2671 |
| **G** | Maximum height with protection grid (FOGS) | mm | 3020 | 3020 |
| **H** | Cab height | mm | 2891 | 2891 |
| **I** | Upper structure width | mm | 2590 | 2590 |
| **J** | Track length | mm | 4130 | 4130 |
| **K** | Shoe width | mm | 500 | 500 |
| | Weight (incl. High Reach Demolition Boom) | kg | 22500 | 19500* |

*without high reach demolition boom

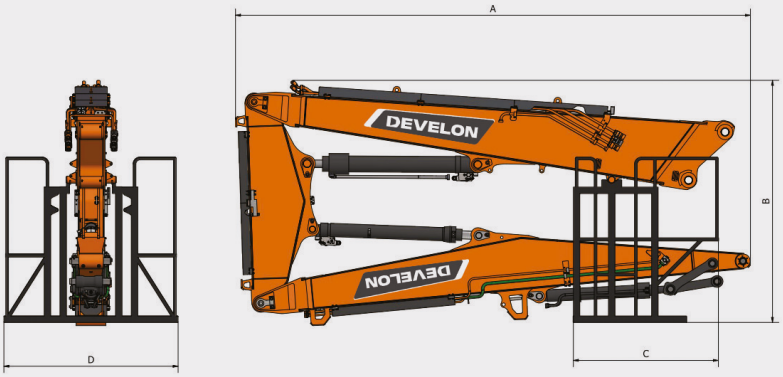


| Dimensions & Weight – HRD | | Unit | Interchangeable |
|---|---|---|---|
| **A** | Overall length | mm | 6450 |
| **B** | Overall height | mm | 2560 |
| **C** | Length of storage rack | mm | 1800 |
| **D** | Width of storage rack | mm | 1900 |
| | Weight of storage rack | kg | 100 |
| | Weight of HRD boom with storage rack | kg | 2900 |

# Digging Configuration

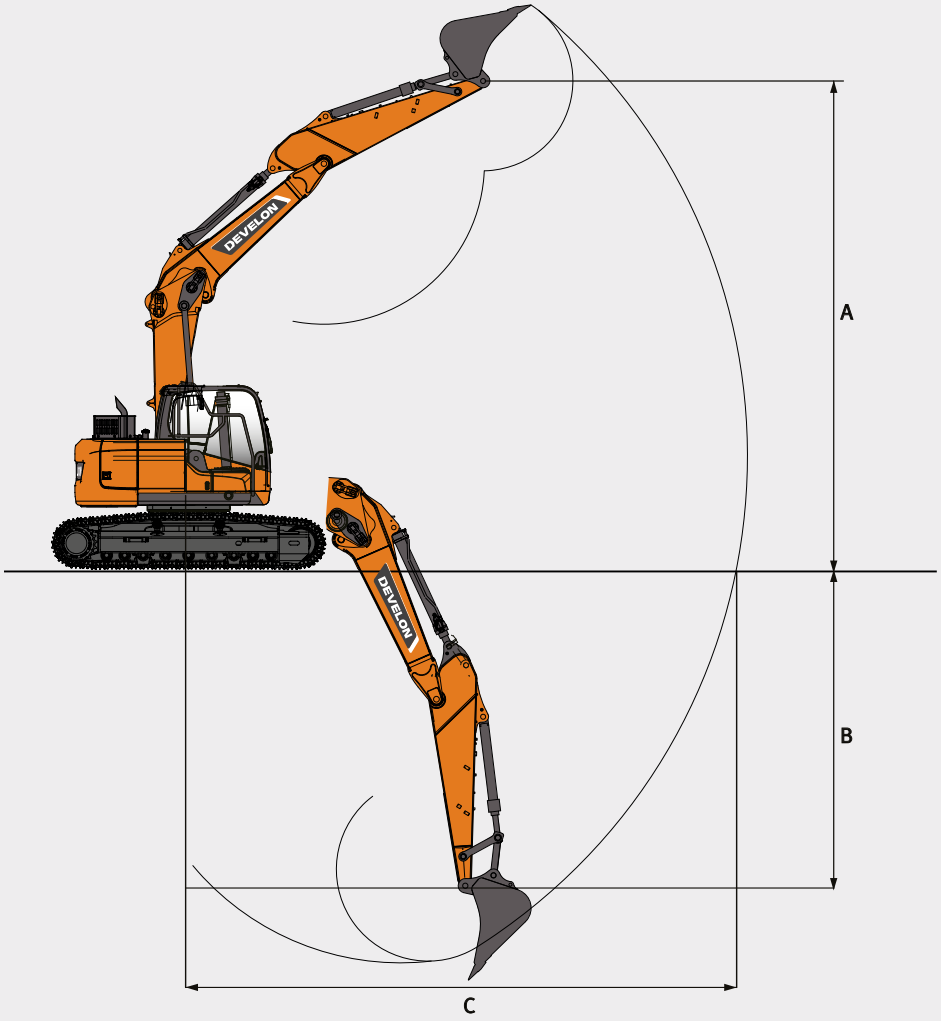


| Digging Configuration | Unit | Interchangeable |
|---|---|---|
| Arm length | mm | 2500 |
| Maximum bucket capacity | $m^3$ | 0.51 |

* additional counterweight included

| Digging Configuration | | Unit | Straight | Bent |
|---|---|---|---|---|
| **A** | Max. pin height | mm | 8000 | 6100 |
| **B** | Max. pin depth | mm | 2400 | 3500 |
| **C** | Max. pin reach | mm | 7600 | 7000 |
| | Max. pin reach at ground level | mm | 7400 | 6800 |

# Dimensions

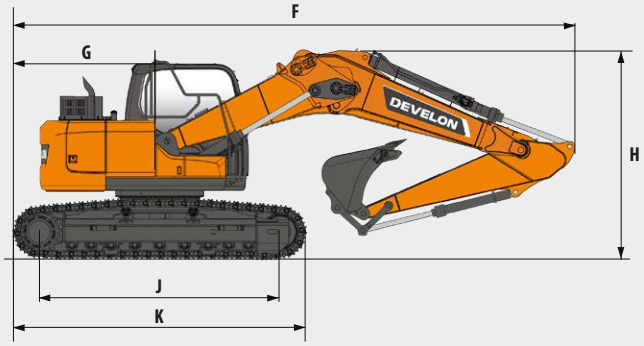


| Dimensions & Weight – Base machine | | Unit | Interchangeable |
|---|---|---|---|
| **F** | Overall length | mm | 9590 |
| **G** | Tail swing radius | mm | 1525 |
| **H** | Boom height | mm | 3110 |
| **J** | Tumbler center distance | mm | 3385 |
| **K** | Track length | mm | 4130 |
| | Weight | kg | 28800 |

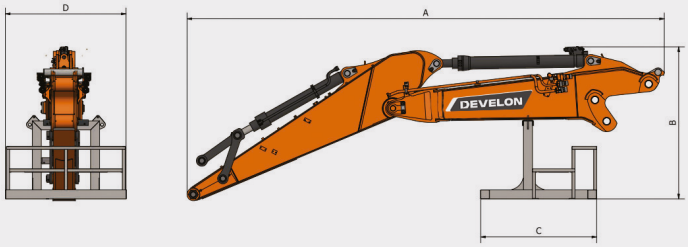


| Transport Dimensions & Weight – Work equipment | | Unit | Interchangeable |
|---|---|---|---|
| **A** | Overall length | mm | 5531 |
| **B** | Overall height | mm | 2157 |
| **C** | Length of storage rack | mm | 1560 |
| **D** | Width of storage rack | mm | 1622 |
| | Weight of digging boom with storage rack | kg | 1926 |

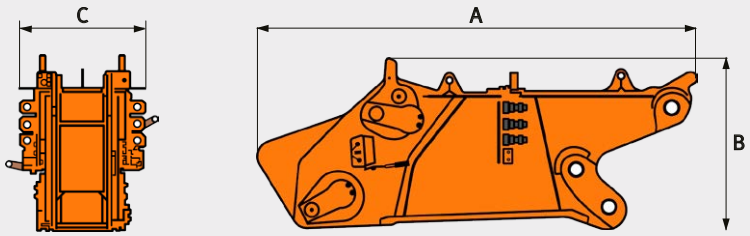


| 2 m extension | | Unit | Interchangeable |
|---|---|---|---|
| **A** | Length of the extension arm | mm | 2950 |
| **B** | Height of the extension arm | mm | 1080 |
| **C** | Width of the extension arm | mm | 740 |

# Standard & Optional equipment

## Standard

| | |
|---|---|
| Develon D34 G2 - Common rail 4 cylinder engine with direct fuel injection and electronic control, 4 | ▪ |
| Auto-idle function | ▪ |
| Auto shut-off | ▪ |
| No EGR | ▪ |
| Boom and arm flow regeneration | ▪ |
| Fine swing mode, on or off from cab | ▪ |
| Swing anti-rebound valves | ▪ |
| Spare ports (valve) | ▪ |
| One-touch power boost function | ▪ |
| Double way line high flow + Breaker piping (PE3C) | ▪ |
| Smart Power Control (SPC3) | ▪ |
| Cylinder cushioning & contamination seals | ▪ |
| Pressurized sound-insulated cab | ▪ |
| Fully adjustable air suspension seat with heater | ▪ |
| Air conditioning with climate control | ▪ |
| Pull-up type front window sun roller blind and removable lower front window | ▪ |
| Sliding left window | ▪ |
| Intermittent upper and lower windshield wiper | ▪ |
| Rain visor | ▪ |
| Rear window defroster switch | ▪ |
| Adjustable PPC wrist control levers for arm boom bucket and swing | ▪ |
| Joysticks & pedal provide proportional control of auxiliary hydraulic lines | ▪ |
| Pedal for auxiliary control 1 & 2 ways | ▪ |
| Jog shuttle switch | ▪ |
| Develon Smart Touch – 8" touch screen, all-in-one | ▪ |
| Attachment management system | ▪ |
| Engine speed (RPM) control dial | ▪ |
| Automatic travel speed | ▪ |
| 4 operating modes & 4 working modes | ▪ |
| Electric horn | ▪ |
| Cigarette lighter | ▪ |
| Ceiling light | ▪ |
| Cup holder | ▪ |
| Multiple storage compartments | ▪ |
| Heating and cooling lunch box | ▪ |
| Flat spacious easy-to-clean floor | ▪ |
| Develon Smart Key & remote door lock/unlock | ▪ |
| Anti-theft protection | ▪ |
| 12 V spare power socket | ▪ |
| Serial communication port for laptop PC interface | ▪ |
| Remote radio ON/OFF switch | ▪ |
| Loudspeakers and connections for radio | ▪ |
| Radio + MP3 (stereo) with Bluetooth | ▪ |
| Rear and side view camera | ▪ |
| Roll Over Protective Structure (ROPS) | ▪ |
| Boom and arm cylinder safety valves | ▪ |
| Overload warning device | ▪ |
| Large guard rails on upper structure and steps | ▪ |
| Rotating beacon | ▪ |
| Punched metal anti-slip plates | ▪ |
| Hydraulic safety lock lever | ▪ |
| Safety glass | ▪ |
| Hammer for emergency escape | ▪ |
| Right and left rear-view mirrors | ▪ |
| Lockable fuel cap and covers | ▪ |
| Battery cut-off switch | ▪ |
| Engine restart prevention system | ▪ |
| Emergency engine stop switch and hydraulic pump control switch | ▪ |
| Guard rails (ISO 2867:2011) | ▪ |
| Parking brake | ▪ |
| LED 8 work lights (2 boom lamp, 4 body lamps, 2 additional lamps on cab) | ▪ |
| Dozer blade | ▪ |
| DEVELON Fleet Management | ▪ |
| Auto shut-off fuel filler pump | ▪ |
| Double element air cleaner | ▪ |
| Fuel pre-filter with water separator sensor | ▪ |
| Dust screen for radiator/oil cooler | ▪ |
| Self-diagnostic function | ▪ |
| Alternator (24 V 100 A) – Battery (2 × 12 V 100 Ah) | ▪ |
| Hydrostatic drive with 2-speed power shift transmission | ▪ |
| Remote greasing for swing circle and work group pivot points | ▪ |
| Falling Objects Guard System – top and front cab guards (ISO 10262 level II and SAE J1356) | ▪ |
| 500 mm rubber shoes (road liner) | ▪ |
| Hydraulic piping low flow for rotating or tilting tool (joystick control) | ▪ |
| Hydraulic piping for quick-coupler | ▪ |

## Optional

| | |
|---|---|
| 500 mm triple grouser shoes | ▪ |
| Digging arm (only for interchangeable boom) | ▪ |
| Long reach arm (only for interchangeable boom) | ▪ |
| 2 m boom extension (only for interchangeable boom) | ▪ |

*Some of there options may be standard in some markets. Some of these options may not be available for certain markets. Please, check with your local Develon delar for more information about availability or to adapt your machine to your application needs.

# Develon Warranty

## Your key to equipment protection and peace on mind

Unlock unparalleled protection for your heavy construction equipment with Develon. Our robust warranties and premium protection plans ensure your investment is safeguarded and adds lasting value.

**Tailored warranty plans**
Choose from a range of affordable protection plans, designed exclusively for Develon customers through our authorized dealers. These plans turn your machine's price into a strategic investment, not just an expense.

**Develon Premium: Premium protection**
Opt for Develon Premium to experience unmatched security, reliability, and overall value. This top-tier plan shields your equipment from unexpected costs and minimizes downtime, letting you focus on what matters – getting the job done*.

**Act now!**
Contact our authorized Develon Dealers today and fortify your equipment investment. With a seamless process and lasting benefits, Develon ensures your heavy construction equipment remains in peak condition.

**Choose Develon Extended Warranty: Play safe and secure your investments.**

* Only for ADT, HEX and WLO.
Offer may vary based on model.

Powered by **Innovation**

DEVELON

Space for dealer's stamp

HD Hyundai Infracore Europe s.r.o.
IBC – Pobrezni 620/3,
18600 Praha 8 – Karlin, Czechia

©2024 HD Hyundai Infracore. All rights reserved.

D4601320-EN (05-24)

Certain specification(s) are based on engineering calculations and are not actual measurements. Specification(s) are provided for comparison purposes only and are subject to change without notice. Specification(s) for your individual Develon equipment will vary based on normal variations in design, manufacturing, operating conditions, and other factors. Pictures of Develon units may show other than standard equipment.