DEVELON

## Crawler Excavators

# DX140LC-7K
# DX160HT-7K




| | DX140LC-7K | DX160HT-7K |
|---|---|---|
| Maximum power | 115 hp | 115 hp |
| Operating weight | 14.4 t | 16.8 t |
| Bucket capacity | 0.51 $m^3$ | 0.5 - 0.75 $m^3$ |



DEVELON DX140LC-7K / DX160HT-7K CRAWLER EXCAVATOR:

# MEET THE NEW GENERATION OF DEVELON MACHINES

Lift your business to the next level with the DX140LC-7K/DX160HT-7K Develon excavator.

Exceptionally powerful, yet environmentally friendly, the DX140LC-7K/DX160HT-7K excavator features extraordinary fuel efficiency.


DEVELON
DX140LC

# RAISE PROFITS, PRODUCTIVITY & FUEL EFFICIENCY

## RELIABILITY

Reinforced castings and forged steel pivot points and reinforced heavy duty arm and boom to withstand high-impact materials. Mono boom or articulated boom for added versatility. Improved hydraulic line routing to protect your investment.

## VERSATILITY

A new attachment mode, with a priority valve on the attachment, results in higher working efficiency when moving the arm and using the attachment at the same time.

## YOUR SAFETY IS OUR PRIORITY

Rear and right side cameras as standard, anti-slip steps and platforms, as well as guard rails on upper structure.
Optional: a 360° all-around view camera (AVM) can be linked with unique ultrasonic detection for maximum safety while working with people around.
Large side mirrors, powerful LED work lights (2 x additional lights possible as an option), travel alarm.

## PRODUCTIVITY

State-of-the-art bucket and arm digging forces. Delivers higher productivity and reduced fuel consumption in an efficient and comfortable work environment.

## UNRIVALLED COMFORT

One of the most spacious cabs in the market, with low noise & vibration levels and excellent all-round visibility. Thanks to the heating and even an optional cooling functionality of the premium seat and improved air ventilation in the DX140LC-7K, you can focus on the job at hand in any situation.






## OPERATE AT EASE

New Develon Smart Touch screen, an easy to read and use 8" touch screen integrates all functions and settings of your machine in one place. Don't miss any important call thanks to the hands-free phone system. And forget fumbling with keyholes: unlock the door remotely, and start or stop the engine with the included Develon Smart Key.

## ENGINE

Exceptionally powerful – with high torque at low revs – the new Develon engine combines reliability and low environmental impact. This Stage V compliant 4 cylinder engine delivers 86 kW at 2000 rpm.

## FULL CONTROL OVER FUEL CONSUMPTION

The latest evolution of the legendary Stage V Develon D34 engine achieves greater fuel savings thanks to the 3rd generation of Smart Power Control (SPC3). Take full control over your fuel consumption with the settable engine shut off.

## ADVANCED FILTRATION

Highest efficiency filters & cleaners remove water, dust & particles to protect your investment optimally.

## EASY MAINTENANCE

Maintenance data directly available from control panel. Easy access to all filters from ground level. Cooling compartment equipped with fine mesh for the intake air, to protect coolers and minimize downtime.


STAGE V
COMPLIANT

# TOP PERFORMANCE AND FUEL EFFICIENCY

## THE POWER TO RAISE PRODUCTIVITY

- The DX140LC-7K is equipped with the latest generation Develon engine
- Stage V compliant, this engine boasts extremely low emissions because reducing our environmental impact is paramount to us
- Exhaust gases are purified by Selective Catalytic Reduction (SCR) technology, a Diesel Oxidation Catalyst (DOC) and a Diesel Particulate Filter (DPF) with no maintenance before 5000 hours

## EFFICIENT FUEL MANAGEMENT

- Choice of 4 power modes (Eco - Standard - Power - Power Plus) and automatic Smart Power Control system for optimal power and reduced fuel consumption in all conditions
- Engine auto-shut-off: shuts down the engine after the machine has been idling for a specified time. The operator can set the delay before shut-off via the Develon Smart Touch screen

## VARIABLE PRESSURE TURBOCHARGER

Provides optimal air flow to the engine combustion chamber under all speed and load conditions, so that exhaust gas is cleaner and fuel economy is improved.

## SPC3 (SMART POWER CONTROL)

2 systems (Variable Speed Control and Pump Torque Control) work together to improve efficiency while maintaining productivity. The system reduces the engine speed and adjusts the pump torque according to work conditions.



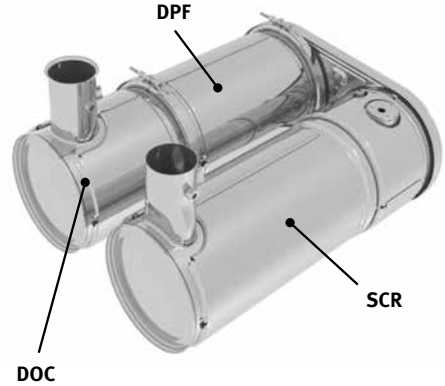




# RELIABILITY – THE HABIT OF A LIFETIME

In your profession, you need equipment you can depend on. At Develon, we put durability and reliability at the core of our machines' development. Our materials and structures undergo stringent testing for strength and resilience under the most extreme conditions.

# DESIGNED FOR LONG-TERM, ALL-ROUND, HEAVY DUTY PERFORMANCE

## EXTRA-STRONG X CHASSIS

Designed using finite element analysis and 3D computer simulation, the X shaped undercarriage ensures optimum structural integrity and durability.

## UNDERCARRIAGE DURABILITY

- The chain is composed of sealed, self-lubricating links for long-term dependability
- The track spring and idler are joined for long-lasting performance and easy maintenance
- Cast steel heavy duty sprockets guarantee the highest resistance
- The track rollers are lubricated for life

## STRENGTHENED BOOM AND ARM

During the development of our machines, we use intensive testing to calculate the best load distribution throughout the boom structure.
Combined with thicker material, this means that element fatigue is limited and both reliability and component life are increased.
To better protect the base of the arm, reinforced bars have been added and the arm center and end boss have been strengthened.

## ADVANCED FILTRATION

- Fuel filters and water separator: a filter-type high-performance water separator effectively captures moisture in the fuel, reducing impurities and helping minimize any fuel-related issues. Pre-filters and dual main filters as standard achieve a high degree of purity that minimizes fuel system failures.

## PIN AND BUSHING ADVANCED TECHNOLOGY

Highly lubricated metal is used for the boom pivot to increase the component's lifetime and lengthen greasing intervals. The bucket pivot features EM (Enhanced Macrosurface) bushings. These have a tailored surface pattern and self-lubricating coating for optimized greasing and more efficient debris removal. Ultra-hard wear-resistant discs and bucket pivot polymer shims increase durability even more.




1
2
3
4
5
6
7
9
10
12
13




1. Sun visor
2. Window grip
3. Parallel wiper
4. 360° all-around view camera (AVM) (optional)
5. Develon Smart Touch
6. Redesigned pedals
7. Flat, spacious, easy-to-clean floor
8. Keyless start (Develon Smart Key)
9. Joysticks and switches are integrated in adjustable control consoles
10. Heated and cooled (option) seat
11. Improved visibility on the bottom right
12. Storage compartment for sunglasses
13. Separate seat height adjustment lever and cushion tilting function

# OPERATING IN HIGH COMFORT

## BEST-IN-CLASS OPERATOR ENVIRONMENT

The DX140LC-7K is designed to provide you with the best possible working conditions. The sophisticated state-of-the-art ROPS cab is pressurized and ISO-certified for your safety. A high-quality heated seat (and even seat cooling available as an option) with air suspension provides maximum operator comfort.

## UNRIVALLED COMFORT

Comfortably seated, you benefit from a clear all-round view of the work site and have easy access to several storage compartments. Pedals, joysticks and armrests have all been designed for operator comfort and efficiency. Noise and vibration levels are remarkably low, and the effectiveness of the air conditioning and automatic climate control has been increased significantly. These features allow you to continue working for hours on end without feeling tired.
Finally, thanks to the hands-free system, you won't miss any important call, and you'll stay available to your customers, as you operate the machine.

## CAB SUSPENSION

The cab's suspension system (CabSus mount) dampens vibrations and provides outstanding protection against impact. This system absorbs shocks and vibrations much more effectively than a conventional silentblock suspension system.

## DEVELON SMART TOUCH

The wide 8" touchscreen provides easy scrolling through the different menus, including power settings and auxiliary hydraulics settings. It also allows you to connect a Bluetooth device or listen to your favorite radio station.

## 360° ALL-AROUND VIEW CAMERA (AVM) SYSTEM (OPTION)

The 360° all-around view camera (AVM) system gives you full view of the machine's surroundings.






# TAKE A SEAT IN BUSINESS CLASS

The ergonomic controls, the easy-to-view color monitor, and Develon Smart Touch place the machine firmly in your hands.

# TOTAL CONTROL IN ALL SIMPLICITY

## DYNAMIC POWER MANAGEMENT

- Automatic travel speed range selection (slow/fast)
- Activating the power boost control system increases digging force by 10%
- A 1-touch deceleration button immediately reduces engine speed to low idle
- Auto-idling starts 4 seconds (adjustable) after all controls are returned to neutral – reducing fuel consumption and noise levels in the cab

## INTELLIGENT FLOATING BOOM MODE (OPTIONAL)

The “intelligent floating boom” function allows the boom to move up and down freely according to the application:

- Hydraulic breaker setting: during boom down operation, the boom moves down freely under its own weight. The result is reduced shock and vibration and longer breaker service life
- Full float setting: during boom down selection, the boom is allowed to rise and fall as required while the bucket is drawn across the ground

## 4 WORK MODES AND 4 POWER MODES

These modes deliver the needed power, according to your specific application, while minimizing fuel consumption:

- Work modes: 1-way mode, 2-way mode, Digging mode and Lifting mode
  With the 2-way mode, we now have a priority valve on the attachment line to increase the machine's productivity when using an attachment and moving the arm at the same time.
- Power modes: Power Plus mode, Power mode, Standard mode, Economy mode

## EXPERT FINGERTIP CONTROL

- The new multi-function 8" Develon Smart Touch screen displays all useful information in a visual and intuitive format.
- At a glance, you can check the machine’s status and settings to achieve optimal efficiency.
- Develon’s unique jog shuttle switch gives you easy and precise control over all machine functions.
- Highly sensitive and low-effort joysticks enable you to work safely, smoothly and confidently.
- The proportional thumb switches* on the joysticks can be mounted horizontally or vertically, as the operator prefers, for optimal control of hydraulic attachments.

*when no Pero option, no thumb switch on left manipulator




LwA
100 dB



# SIMPLE MAINTENANCE FOR MAXIMUM UPTIME

## MAINTENANCE ACCESS MADE SIMPLE

- Large guard rails are installed along with anti-slip steps and plates, for safer, easier access to the whole upper structure.
- The air conditioning filter is placed on the side of the cab for easy access. The filter's cover can be locked and opened with a key.
- A battery cut-off switch makes it easy to disconnect the battery for long-term storage.
- The hour meter display can be easily checked from ground level.
- Shut-off valves have been fitted on the pre-filter piping line and fuel tank drain piping to make servicing easier and prevent pollution from leakage.
- Engine parts can be easily reached via the top and side panels.
- For extra accessibility and servicing convenience, all filters (engine oil filter, fuel pre-filters, fuel filters and pilot filter) are located in the pump compartment.

## ADBLUE® TANK

Connected to the ECU, sensors in the tank detect low levels of AdBlue® or any other system malfunction. Also equipped with an AdBlue® level indicator during refilling, to avoid over filling.

## CENTRALIZED GREASING POINTS

To make maintenance easier, the greasing points have been centralized. An automatic lubrication system is available as an option.



# TECHNICAL SPECIFICATIONS DX140LC-7K

## ENGINE

Designed to deliver superior performance and fuel efficiency, the Develon G2 D34 diesel engine fully meets the latest Stage V emission regulations. To optimize machine performance, the engine uses high-pressure fuel injectors, air-to-air inter-cooler and electronic engine controls. 4-Cycle Water-Cooled, Wastegate Turbocharged, Diesel Oxidation Catalyst (DOC) & Selective Catalytic Reduction (SCR) and Diesel Particulate Filter (DPF), without EGR.

**Model**

Develon G2 D34

**No. of cylinders**

4

**Rated power at 2000 rpm**

| | |
|---|---|
| SAE J1995 | 86 kW (115 hp) |
| SAE J1349 | 81.6 kW (109 hp) |

**Max. torque at 1400 rpm**

46.9 kgf·m

**Idle (low - high)**

950 [±10] - 2000 [±25] rpm

**Displacement**

3409 cm³

**Bore × stroke**

98 mm × 113 mm

**Starter**

24 V / 5 kW

**Batteries - Alternator**

2 × 12 V, 100 Ah – 24 V, 100 A

**Air filter**

Double element air cleaner

## UNDERCARRIAGE

Extremely robust construction throughout – made of high-quality, durable materials, with all welded structures designed to limit stresses.

- Track rollers lubricated for life
- Idlers and sprockets fitted with floating seals
- Track shoes made of induction-hardened alloy with triple grouser
- Heat-treated connecting pins
- Hydraulic track adjuster with shock-absorbing tension mechanism

**Upper rollers (standard shoe)**

1

**Lower rollers**

7

**Number of links & shoes per side**

46

**Link pitch**

171.45 mm

## HYDRAULIC SYSTEM

The e-EPOS (Electronic Power Optimising System) is the brain of the excavator – minimising fuel consumption and optimizing the efficiency of the hydraulic system for all working conditions.
To harmonize the operation of the engine and the hydraulics, the e-EPOS is connected to the engine's electronic control unit (ECU) via a data transfer link.

- 2 travel speeds offer either increased torque or high speed
- Cross-sensing pump system for fuel savings
- Auto-deceleration system
- 4 operating modes, 4 power modes
- Flow and pressure control of auxiliary hydraulic circuits from control panel
- Computer-aided pump flow control

**Main pump**

2 × variable displacement tandem axial piston pump

| | |
|---|---|
| Maximum flow at 2000 rpm | 2 × 114 l/min |

**Pilot pump**

Gear pump

| | |
|---|---|
| Maximum flow at 2000 rpm | 30 l/min |

**Relief valve settings**

| | |
|---|---|
| Implement | 330 kgf/cm² |
| Travel | 350 kgf/cm² |
| Swing | 275 kgf/cm² |
| Pilot | 40 kgf/cm² |

## HYDRAULIC CYLINDERS

High-strength steel piston rods and cylinder bodies. Shock-absorbing mechanism fitted in all cylinders for shock-free operation and extended piston life.

| Cylinders | Quantity | Bore × rod diameter × stroke (mm) |
|---|---|---|
| Mono boom | 2 | 110 × 75 × 1085 |
| Articulated boom | 2 | 110 × 75 × 970 |
| Arm for mono boom | 1 | 115 × 80 × 1108 |
| Arm for articulated boom | 1 | 115 × 80 × 1068 |
| Bucket | 1 | 100 × 70 × 900 |

## CAB

The air-conditioning and heating systems are integrated for optimal climate control. An automatically-controlled fan supplies the pressurized and filtered cab air, which is distributed throughout the cab from multiple vents.
The heated air suspension, adjustable operator's seat includes a seat belt. The operator can adjust the ergonomic seat and joystick console separately according to his preferences.

**A-weighted emission sound pressure level at the operator's position, LpAd (ISO 6396:2008)**

Declared: 69 dB(A)

**A-weighted sound power level, LwAd (2000/14/EC)**

Declared: 100 dB(A)
Measured: 99 dB(A)

## FLUID CAPACITIES

| | |
|---|---|
| Fuel tank | 265 l |
| Cooling system (radiator) | 27.1 l |
| AdBlue® (DEF) tank | 25 l |
| Hydraulic oil tank | 145 l |
| Engine oil | 12.6 l |
| Swing drive | 3 l |
| Travel device | 2 × 2 l |

## SWING MECHANISM

The swing mechanism uses an axial piston motor, driving a 2-stage planetary reduction gear bathed in oil for maximum torque.

- Swing bearing: single-row, shear type ball bearing with induction hardened internal gear
- Internal gear and pinion immersed in lubricant

**Maximum swing speed**

10.13 rpm

**Maximum swing torque**

4888 kgf·m

## DRIVE

Each track is driven by an independent, high-torque axial piston motor through a planetary reduction gearbox. Two levers / foot pedals guarantee smooth travel with counter-rotation on demand. The track frame protects the travel motor, brake and planetary gears. The multi-disc track brakes are spring-applied and hydraulic released.

**Travel speed (low - high)**

2.9 - 4.7 km/h

**Maximum traction**

15.2 t

**Maximum gradeability**

35° / 70%

## WEIGHT

| | Shoe width (mm) | Machine weight (kg) | Ground pressure (kgf/cm²) |
|---|---|---|---|
| Triple grouser | 500 | 14200 | 0.43 |
| | 600 (STD) | 14400 | 0.37 |
| | 700 | 14600 | 0.32 |
| Rubber shoe (road liner) | 500 | 14100 | 0.43 |

## COMPONENT WEIGHTS

| Item | Unit | Weight | Remarks |
|---|---|---|---|
| Upper structure without front (mono boom) | kg | 6898 | With counterweight |
| Upper structure without front (articulated boom) | kg | 6986 | With counterweight |
| Lower structure assembly | kg | 5007 | |
| Counterweight | kg | 2200 | |
| Front assembly | kg | 2434 | |
| 4.6 m mono boom | kg | 780 | Including bushing |
| 4.98 m articulated boom (upper / lower) | kg | 592 / 381 | Including bushing |
| Arm (2.1 m / 2.5 m / 3.0 m) | kg | 370 / 414 / 456 | Including bushing |

# TECHNICAL SPECIFICATIONS DX140LC-7K

## BUCKETS

| Bucket Type | Capacity (m³) SAE | Width (mm) | | Weight (kg) | 4600 mm mono boom | | | 4980 mm articulated boom | |
|---|---|---|---|---|---|---|---|---|---|
| | | With side cutters | W/O side cutters | | 2100 mm arm | 2500 mm arm | 3000 mm arm | 2100 mm arm | 2500 mm arm |
| GP | 0.24 | 534 | 464 | 275 | A | A | A | A | A |
| | 0.39 | 820 | 736 | 341 | A | A | A | A | A |
| | 0.45 | 911 | 821 | 381 | A | A | A | A | A |
| | 0.51 | 991 | 907 | 393 | A | A | A | A | B |
| | 0.59 | 1081 | 997 | 413 | A | B | C | B | C |
| | 0.64 | 1167 | 1083 | 435 | A | B | C | C | D |
| | 0.76 | 1339 | 1255 | 484 | C | C | D | D | D |
| DC Class | 0.45 | - | 1500 | 357 | A | A | A | A | A |
| | 0.54 | - | 1800 | 403 | A | A | B | A | B |
| H Class | 0.31 | 642 | 600 | 372 | A | A | A | A | A |
| | 0.42 | 792 | 750 | 420 | A | A | A | A | A |
| | 0.52 | 942 | 900 | 478 | A | A | B | B | C |
| | 0.60 | 1042 | 1000 | 510 | A | B | C | C | D |
| | 0.67 | 1142 | 1100 | 542 | B | C | D | C | D |
| | 0.74 | 1242 | 1200 | 585 | C | D | - | D | - |

A: Suitable for materials with a density less than or equal to 2100 kg/m³ B: Suitable for materials with a density less than or equal to 1800 kg/m³
C: Suitable for materials with a density less than or equal to 1500 kg/m³ D: Suitable for materials with a density less than or equal to 1200 kg/m³
Based on ISO 10567 and SAE J296, arm length without quick-coupler. For reference only.

## DEVELON BUCKETS

4 More - More choice - More durable - More strength - More performance!

### General Construction Bucket



The General purpose bucket is designed for digging and re-handling soft to medium materials (e.g. materials with low wear characteristics such as top-soil, loam, coal).

### Heavy Construction Bucket



The Heavy duty bucket is designed for mass excavations in dense materials such as hard packed clay, shot limestone, limited rock content and gravel.

### Severe Mining Bucket



The Severe duty bucket is designed for durability in digging compact materials like loose or blasted rock, hard packed clay and stone.

### X-treme Mining Bucket



The X-treme duty bucket is designed as a long-life version of the Severe duty bucket for digging in the most abrasive materials.

# DIMENSIONS DX140LC-7K

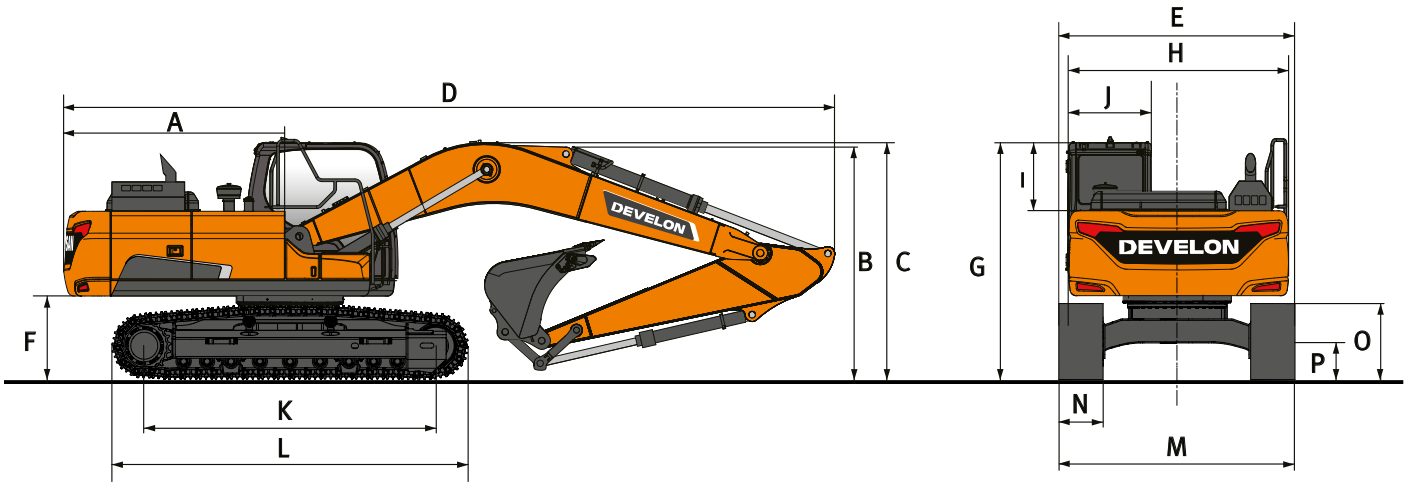


## DIMENSIONS

| | Unit | Mono boom | | | Articulated boom | |
|---|---|---|---|---|---|---|
| **Boom length** | **mm** | **4600** | | | **4980** | |
| **Arm length** | **mm** | **2100** | **2500** | **3000** | **2100** | **2500** |
| **Bucket capacity** | **m³** | **0.59** | **0.51** | **0.45** | **0.51** | **0.45** |
| A Tail swing radius | mm | 2205 | 2205 | 2205 | 2205 | 2205 |
| B Shipping height (boom) | mm | 2480 | 2635 | 3065 | 2615 | 2800 |
| C Shipping height (hose) | mm | 2640 | 2820 | 3180 | 2840 | 3000 |
| D Shipping length | mm | 7690 | 7685 | 7640 | 8050 | 7975 |
| E Shipping width | mm | 2590 | 2590 | 2590 | 2590 | 2590 |
| F Counterweight clearance* | mm | 895 | 895 | 895 | 895 | 895 |
| G Height over cab | mm | 2785 | 2785 | 2785 | 2785 | 2785 |
| H House width | mm | 2540 | 2540 | 2540 | 2540 | 2540 |
| I Cab height above house | mm | 840 | 840 | 840 | 840 | 840 |
| J Cab width | mm | 1010 | 1010 | 1010 | 1010 | 1010 |
| K Tumbler distance | mm | 3035 | 3035 | 3035 | 3035 | 3035 |
| L Track length | mm | 3755 | 3755 | 3755 | 3755 | 3755 |
| M Undercarriage width STD/LC | mm | 2590 | 2590 | 2590 | 2590 | 2590 |
| N Shoe width | mm | 600 | 600 | 600 | 600 | 600 |
| O Track height* | mm | 795 | 795 | 795 | 795 | 795 |
| P Ground clearance* | mm | 410 | 410 | 410 | 410 | 410 |

*** : without grouser**

# WORKING RANGE DX140LC-7K

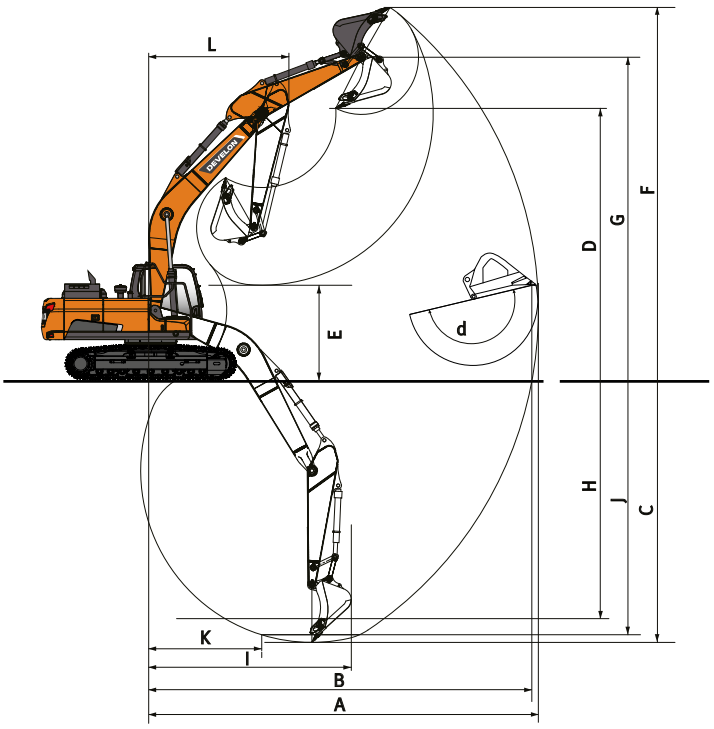


## WORKING RANGE

| | Unit | Mono boom | | | Articulated boom | |
|---|---|---|---|---|---|---|
| **Boom length** | **mm** | **4600** | | | **4980** | |
| **Arm length** | **mm** | **2100** | **2500** | **3000** | **2100** | **2500** |
| **Bucket capacity** | **m³** | **0.59** | **0.51** | **0.45** | **0.51** | **0.45** |
| A Max. digging reach | mm | 7815 | 8285 | 8665 | 8260 | 8720 |
| B Max. digging reach (ground) | mm | 7660 | 8140 | 8530 | 8115 | 8585 |
| C Max. digging depth | mm | 5235 | 5635 | 6135 | 5405 | 5835 |
| D Max. loading height | mm | 5865 | 6315 | 6440 | 6395 | 6855 |
| E Min. loading height | mm | 2575 | 2230 | 1725 | 3070 | 2715 |
| F Max. digging height | mm | 8150 | 8660 | 8745 | 8730 | 9235 |
| G Max. bucket pin height | mm | 7080 | 7535 | 7655 | 7615 | 8075 |
| H Max. vertical wall depth | mm | 3710 | 4495 | 4685 | 3895 | 4200 |
| I Max. radius vertical | mm | 5745 | 5605 | 5970 | 6180 | 6525 |
| J Max. digging depth (8' level) | mm | 4910 | 5395 | 5890 | 5285 | 5725 |
| K Min. radius 8' level | mm | 1805 | 1915 | 1825 | 895 | 900 |
| L Min. swing radius | mm | 2285 | 2600 | 2625 | 2775 | 2970 |
| d Bucket angle | ° | 174 | 174 | 174 | 174 | 174 |

## DIGGING FORCES (ISO)

| | Unit | Mono boom | | | Articulated boom | |
|---|---|---|---|---|---|---|
| **Boom length** | **mm** | **4600** | | | **4980** | |
| **Arm length** | **mm** | **2100** | **2500** | **3000** | **2100** | **2500** |
| **Bucket capacity** | **m³** | **0.59** | **0.51** | **0.45** | **0.51** | **0.45** |
| BUCKET (Normal/Press. Up) | ton | 10.5/11.1 | 10.5/11.1 | 10.5/11.1 | 10.5/11.1 | 10.5/11.1 |
| ARM (Normal/Press. Up) | ton | 7.2/7.7 | 6.2/6.5 | 5.6/6.0 | 7.2/7.7 | 6.2/6.5 |

# LIFTING CAPACITIES DX140LC-7K

## MONO BOOM • W/O BUCKET

(UNIT: 1000 KG)

| A | 1.5 m | | 3.0 m | | 4.5 m | | 6.0 m | | Max. reach | | |
|---|---|---|---|---|---|---|---|---|---|---|---|
| B | | | | | | | | | | | A |
| **Mono boom 4.6 m • Arm 2.5 m • Shoe 500 mm • Counterweight 2.2 t • Dozer up** | | | | | | | | | | | |
| 7.5 m | | | | | | | | | 2.74 * | 2.74 * | 3.61 |
| 6.0 m | | | | | 3.64 * | 3.64 * | | | 2.16 * | 2.16 * | 5.42 |
| 4.5 m | | | | | 3.92 * | 3.92 * | 3.18 * | 2.65 | 2.00 * | 2.00 * | 6.39 |
| 3.0 m | | | 6.64 * | 6.64 * | 4.92 * | 3.99 | 3.63 | 2.59 | 1.99 * | 1.99 * | 6.91 |
| 1.5 m | | | 8.33 * | 6.77 | 5.50 | 3.75 | 3.52 | 2.49 | 2.10 * | 1.95 | 7.07 |
| 0.0 m | | | 7.17 * | 6.48 | 5.30 | 3.58 | 3.43 | 2.41 | 2.36 * | 1.99 | 6.90 |
| -1.5 m | 5.40 * | 5.40 * | 10.35 * | 6.46 | 5.23 | 3.52 | 3.41 | 2.38 | 2.89 * | 2.21 | 6.37 |
| -3.0 m | 9.21 * | 9.21 * | 9.81 * | 6.57 | 5.29 | 3.57 | | | 4.07 | 2.83 | 5.37 |
| **Mono boom 4.6 m • Arm 2.5 m • Shoe 500 mm • Counterweight 2.2 t • Dozer down** | | | | | | | | | | | |
| 7.5 m | | | | | | | | | 2.74 * | 2.74 * | 3.61 |
| 6.0 m | | | | | 3.64 * | 3.64 * | | | 2.16 * | 2.16 * | 5.42 |
| 4.5 m | | | | | 3.92 * | 3.92 * | 3.18 * | 3.16 | 2.00 * | 2.00 * | 6.39 |
| 3.0 m | | | 6.64 * | 6.64 * | 4.92 * | 4.81 | 4.31 * | 3.10 | 1.99 * | 1.99 * | 6.91 |
| 1.5 m | | | 8.33 * | 8.33 * | 6.18 * | 4.56 | 4.84 * | 2.99 | 2.10 * | 2.10 * | 7.07 |
| 0.0 m | | | 7.17 * | 7.17 * | 7.08 * | 4.38 | 5.27 * | 2.91 | 2.36 * | 2.36 * | 6.90 |
| -1.5 m | 5.40 * | 5.40 * | 10.35 * | 8.22 | 7.30 * | 4.32 | 5.30 * | 2.88 | 2.89 * | 2.67 | 6.37 |
| -3.0 m | 9.21 * | 9.21 * | 9.81 * | 8.35 | 6.60 * | 4.37 | | | 4.20 * | 3.42 | 5.37 |
| **Mono boom 4.6 m • Arm 3.0 m • Shoe 700 mm • Counterweight 2.2 t • Dozer up** | | | | | | | | | | | |
| 7.5 m | | | | | | | | | 2.42 * | 2.42 * | 4.34 |
| 6.0 m | | | | | | | | | 2.05 * | 2.05 * | 5.91 |
| 4.5 m | | | | | 3.35 * | 3.35 * | 3.20 * | 2.78 | 1.94 * | 1.94 * | 6.81 |
| 3.0 m | | | 5.41 * | 5.41 * | 4.38 * | 4.18 | 3.78 | 2.70 | 1.96 * | 1.96 * | 7.30 |
| 1.5 m | | | 8.90 * | 7.14 | 5.72 * | 3.91 | 3.66 | 2.58 | 2.08 * | 1.87 | 7.45 |
| 0.0 m | | | 8.35 * | 6.69 | 5.49 | 3.70 | 3.55 | 2.48 | 2.34 * | 1.89 | 7.29 |
| -1.5 m | 5.20 * | 5.20 * | 10.12 * | 6.59 | 5.38 | 3.60 | 3.49 | 2.43 | 2.85 * | 2.06 | 6.79 |
| -3.0 m | 8.19 * | 8.19 * | 10.41 * | 6.65 | 5.39 | 3.62 | | | 3.64 | 2.53 | 5.87 |
| -4.5 m | | | 7.94 * | 6.89 | | | | | 5.36 * | 4.09 | 4.25 |
| **Mono boom 4.6 m • Arm 3.0 m • Shoe 700 mm • Counterweight 2.2 t • Dozer down** | | | | | | | | | | | |
| 7.5 m | | | | | | | | | 2.42 * | 2.42 * | 4.34 |
| 6.0 m | | | | | | | | | 2.05 * | 2.05 * | 5.91 |
| 4.5 m | | | | | 3.35 * | 3.35 * | 3.20 * | 3.20 * | 1.94 * | 1.94 * | 6.81 |
| 3.0 m | | | 5.41 * | 5.41 * | 4.38 * | 4.38 * | 3.95 * | 3.54 | 1.96 * | 1.96 * | 7.30 |
| 1.5 m | | | 8.90 * | 8.90 * | 5.72 * | 5.26 | 4.56 * | 3.42 | 2.08 * | 2.08 * | 7.45 |
| 0.0 m | | | 8.35 * | 8.35 * | 6.81 * | 5.03 | 5.10 * | 3.31 | 2.34 * | 2.34 * | 7.29 |
| -1.5 m | 5.20 * | 5.20 * | 10.12 * | 9.61 | 7.27 * | 4.93 | 5.33 * | 3.26 | 2.85 * | 2.75 | 6.79 |
| -3.0 m | 8.19 * | 8.19 * | 10.41 * | 9.69 | 6.93 * | 4.94 | | | 4.03 * | 3.39 | 5.87 |
| -4.5 m | | | 7.94 * | 7.94 * | | | | | 5.36 * | 5.36 * | 4.25 |
| **Mono boom 4.6 m • Arm 3.0 m • Shoe 700 mm • Counterweight 2.2 t • Without dozer** | | | | | | | | | | | |
| 7.5 m | | | | | | | | | 2.42 * | 2.42 * | 4.34 |
| 6.0 m | | | | | | | | | 2.05 * | 2.05 * | 5.91 |
| 4.5 m | | | | | 3.35 * | 3.35 * | 3.20 * | 2.61 | 1.94 * | 1.94 * | 6.81 |
| 3.0 m | | | 5.41 * | 5.41 * | 4.38 * | 3.93 | 3.80 | 2.52 | 1.96 * | 1.83 | 7.30 |
| 1.5 m | | | 8.90 * | 6.70 | 5.72 * | 3.66 | 3.67 | 2.41 | 2.08 * | 1.73 | 7.45 |
| 0.0 m | | | 8.35 * | 6.25 | 5.51 | 3.45 | 3.56 | 2.31 | 2.34 * | 1.75 | 7.29 |
| -1.5 m | 5.20 * | 5.20 * | 10.12 * | 6.15 | 5.40 | 3.36 | 3.51 | 2.26 | 2.85 * | 1.91 | 6.79 |
| -3.0 m | 8.19 * | 8.19 * | 10.41 * | 6.21 | 5.41 | 3.37 | | | 3.65 | 2.36 | 5.87 |
| -4.5 m | | | 7.94 * | 6.45 | | | | | 5.36 * | 3.82 | 4.25 |

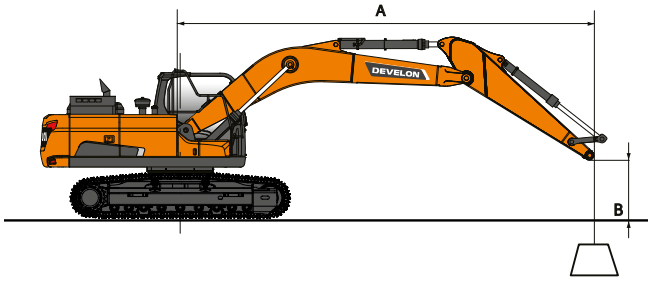


: Rating over front.
: Rating over side or 360°.

1. Lifting capacities are in compliance with ISO 10567:2007(E).
2. The load point is at the end of the arm.
3. * = The nominal loads are based on hydraulic capacity.
4. The nominal loads shown do not exceed 75% of tipping loads or 87% of hydraulic lifting capacity.
5. For lifting capacity with bucket, simply subtract the actual weight of the bucket from the values.
6. The configurations indicated do not necessarily reflect the standard equipment of the machine.

# LIFTING CAPACITIES DX140LC-7K

## ARTICULATED BOOM • W/O BUCKET

(UNIT: 1000 KG)

| A | 3.0 m | | 4.5 m | | 6.0 m | | 7.5 m | | Max. reach | | |
|---|---|---|---|---|---|---|---|---|---|---|---|
| B | | | | | | | | | | | A |
| **Articulated boom 4.98 m • Arm 2.5 m • Shoe 700 mm • Counterweight 2.2 t • Dozer up** | | | | | | | | | | | |
| 7.5 m | | | | | | | | | 2.76 * | 2.76 * | 4.43 |
| 6.0 m | | | 2.89 * | 2.89 * | | | | | 2.29 * | 2.29 * | 5.98 |
| 4.5 m | | | 3.38 * | 3.38 * | 3.39 * | 2.76 | | | 2.13 * | 2.13 * | 6.88 |
| 3.0 m | | | 4.48 * | 4.09 | 3.78 | 2.66 | | | 2.11 * | 1.92 | 7.36 |
| 1.5 m | | | 5.65 | 3.80 | 3.64 | 2.54 | 2.24 * | 1.82 | 2.20 * | 1.82 | 7.50 |
| 0.0 m | | | 5.44 | 3.62 | 3.54 | 2.44 | | | 2.42 * | 1.85 | 7.34 |
| -1.5 m | 7.42 * | 6.55 | 5.37 | 3.56 | 3.50 | 2.41 | | | 2.86 * | 2.03 | 6.85 |
| -3.0 m | 10.16 * | 6.67 | 5.43 | 3.61 | | | | | 3.62 | 2.50 | 5.94 |
| **Articulated boom 4.98 m • Arm 2.5 m • Shoe 700 mm • Counterweight 2.2 t • Dozer down** | | | | | | | | | | | |
| 7.5 m | | | | | | | | | 2.76 * | 2.76 * | 4.43 |
| 6.0 m | | | 2.89 * | 2.89 * | | | | | 2.29 * | 2.29 * | 5.98 |
| 4.5 m | | | 3.38 * | 3.38 * | 3.39 * | 3.39 * | | | 2.13 * | 2.13 * | 6.88 |
| 3.0 m | | | 4.48 * | 4.48 * | 3.83 * | 3.52 | | | 2.11 * | 2.11 * | 7.36 |
| 1.5 m | | | 5.79 * | 5.17 | 4.44 * | 3.39 | 2.24 * | 2.24 * | 2.20 * | 2.20 * | 7.50 |
| 0.0 m | | | 6.75 * | 4.97 | 4.97 * | 3.29 | | | 2.42 * | 2.42 * | 7.34 |
| -1.5 m | 7.42 * | 7.42 * | 7.12 * | 4.90 | 5.22 * | 3.25 | | | 2.86 * | 2.72 | 6.85 |
| -3.0 m | 10.16 * | 9.76 | 6.84 * | 4.96 | | | | | 3.82 * | 3.36 | 5.94 |

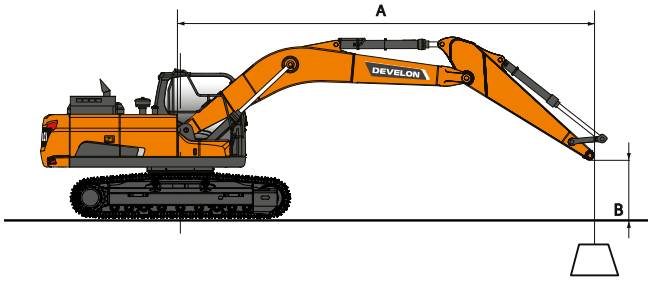


: Rating over front.
: Rating over side or 360°.

1. Lifting capacities are in compliance with ISO 10567:2007(E).
2. The load point is at the end of the arm.
3. * = The nominal loads are based on hydraulic capacity.
4. The nominal loads shown do not exceed 75% of tipping loads or 87% of hydraulic lifting capacity.
5. For lifting capacity with bucket, simply subtract the actual weight of the bucket from the values.
6. The configurations indicated do not necessarily reflect the standard equipment of the machine.


DEVELON

# TECHNICAL SPECIFICATIONS DX160HT-7K

## HIGH TRACK UNDERCARRIAGE FOR FORESTRY APPLICATION

Extremely robust construction throughout - made of high-quality, durable materials, with all welded structures designed to limit stresses.

- Track rollers lubricated for life
- Idlers and sprockets fitted with floating seals
- Track shoes made of induction-hardened alloy with triple grouser
- Heat-treated connecting pins
- Hydraulic track adjuster with shock-absorbing tension mechanism

**Upper rollers**

2

**Lower rollers**

7

**Number of links & shoes per side**

44

**Link pitch**

190 mm

**Tumbler distance (std)**

3180 mm

## HIGH TRACK OPTION

**Travel speed (low - high)**

2.3 - 3.7 km/h

**Maximum traction**

Low speed 29.7 t / High speed 12 t

**Maximum gradeability**

35° / 70%



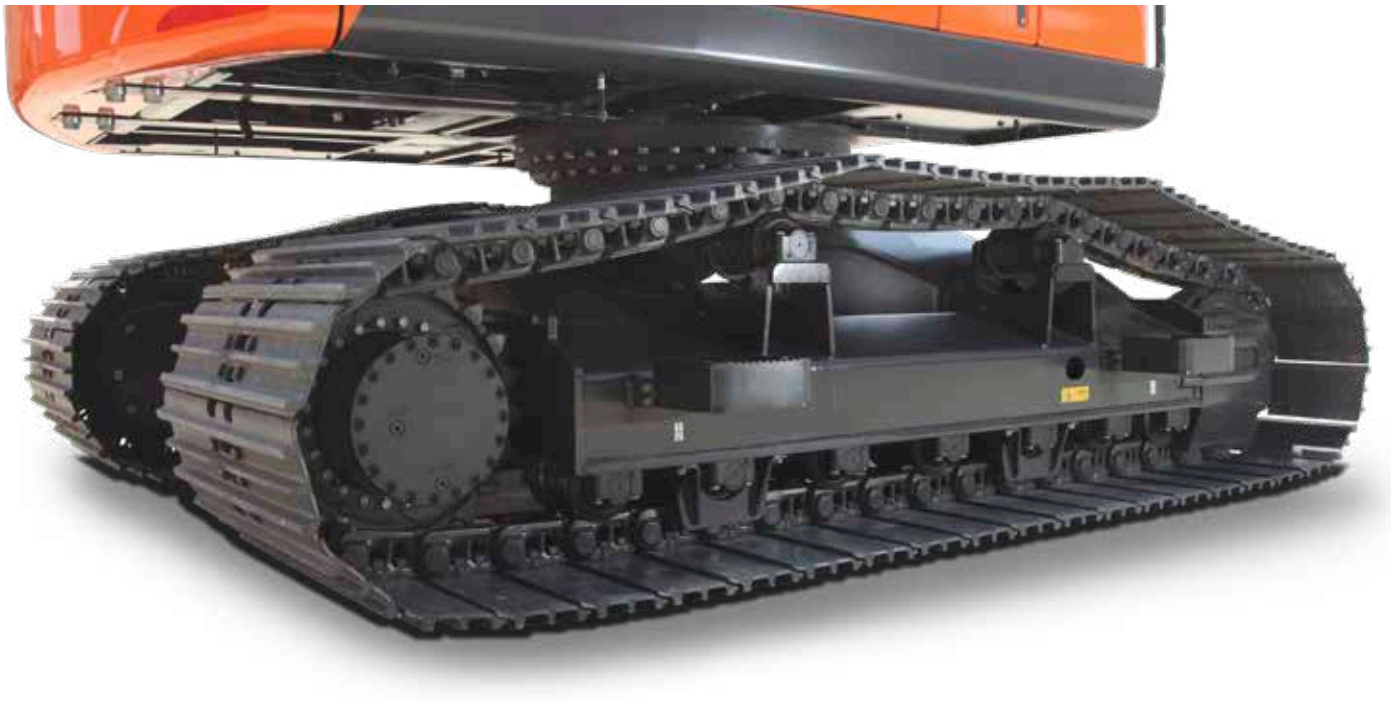

# DIMENSIONS DX160HT-7K

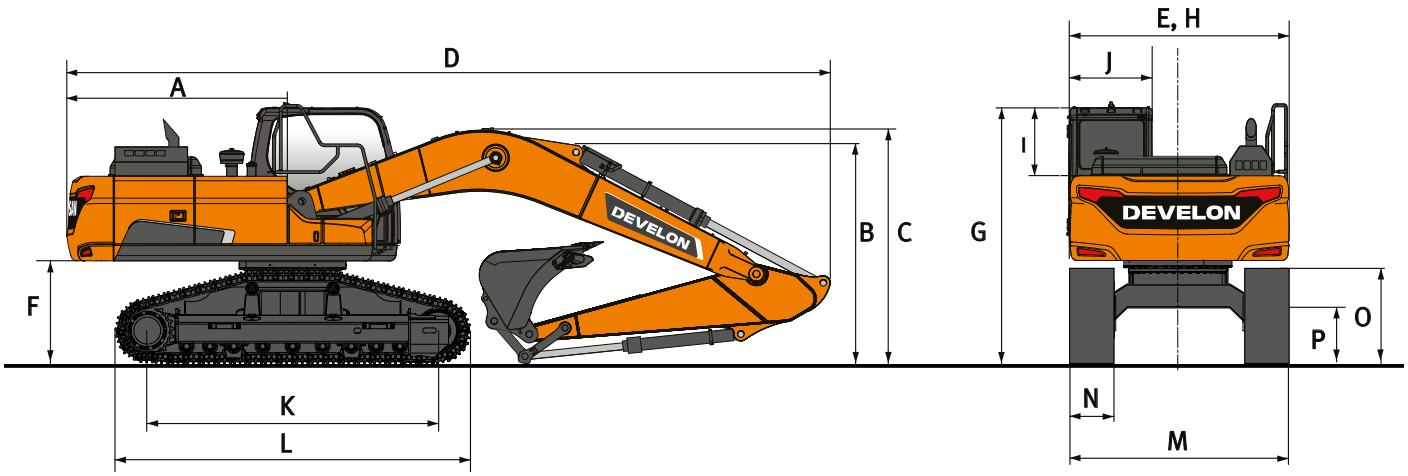


## DIMENSIONS

| | Unit | Mono boom | | Articulated boom |
|---|---|---|---|---|
| **Boom length** | **mm** | **4600** | | **4980** |
| **Arm length** | **mm** | **2500** | **3000** | **2500** |
| **Bucket capacity** | **m³** | **0.51** | **0.45** | **0.45** |
| A Tail swing radius | mm | 2205 | 2205 | 2205 |
| B Shipping height (boom) | mm | 3020 | 2680 | 2950 |
| C Shipping height (hose) | mm | 3200 | 2830 | 3150 |
| D Shipping length | mm | 7720 | 7650 | 8015 |
| E Shipping width | mm | 3000 | 3000 | 3000 |
| F Counterweight clearance* | mm | 1175 | 1175 | 1175 |
| G Height over cab | mm | 3050 | 3050 | 2785 |
| H House width | mm | 3000 | 3000 | 3000 |
| I Cab height above house | mm | 830 | 830 | 830 |
| J Cab width | mm | 1010 | 1010 | 1010 |
| K Tumbler distance | mm | 3180 | 3180 | 3180 |
| L Track length | mm | 3925 | 3925 | 3925 |
| M Undercarriage width | mm | 3000 | 3000 | 3000 |
| N Shoe width | mm | 800 | 800 | 800 |
| O Track height* | mm | 946 | 946 | 946 |
| P Ground clearance* | mm | 615 | 615 | 615 |

* : without grouser

## WEIGHT

| | Shoe width (mm) | Machine weight (t) | Ground pressure (kgf/cm²) |
|---|---|---|---|
| Triple grouser | 800 | 16.8 | 0.31 |
| | 900 | 17.1 | 0.28 |

# WORKING RANGE DX160HT-7K

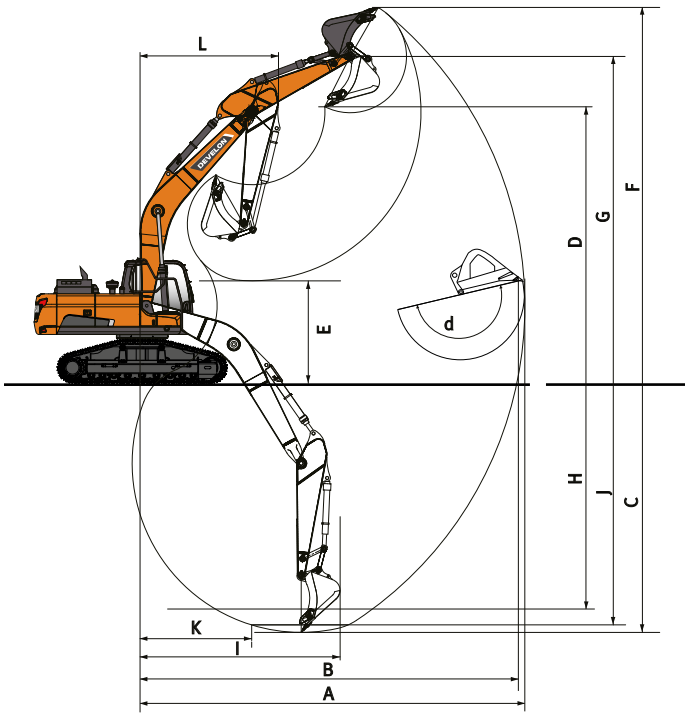


## WORKING RANGE

| | Unit | Mono boom | | Articulated boom |
|---|---|---|---|---|
| **Boom length** | **mm** | **4600** | | **4980** |
| **Arm length** | **mm** | **2500** | **3000** | **2500** |
| **Bucket capacity** | **m³** | **0.51** | **0.45** | **0.45** |
| A Max. digging reach | mm | 8285 | 8665 | 8720 |
| B Max. digging reach (ground) | mm | 8080 | 8475 | 8530 |
| C Max. digging depth | mm | 5355 | 5850 | 5445 |
| D Max. loading height | mm | 6605 | 6720 | 7140 |
| E Min. loading height | mm | 2765 | 2005 | 2995 |
| F Max. digging height | mm | 8940 | 9025 | 9515 |
| G Max. bucket pin height | mm | 7815 | 7940 | 8355 |
| H Max. vertical wall depth | mm | 4210 | 4405 | 4400 |
| I Max. radius vertical | mm | 5605 | 5970 | 5725 |
| J Max. digging depth (8'level) | mm | 5115 | 5610 | 5335 |
| K Min. radius 8'level | mm | 1915 | 1825 | 910 |
| L Min. swing radius | mm | 2380 | 2625 | 2970 |
| d Bucket angle | ° | 174 | 174 | 174 |

## DIGGING FORCES (ISO)

| | Unit | Mono boom | | Articulated boom |
|---|---|---|---|---|
| **Boom length** | **mm** | **4600** | | **4980** |
| **Arm length** | **mm** | **2500** | **3000** | **2500** |
| **Bucket capacity** | **m³** | **0.51** | **0.45** | **0.45** |
| BUCKET (Normal/Press. Up) | ton | 10.5/11.1 | 10.5/11.1 | 10.5/11.1 |
| ARM (Normal/Press. Up) | ton | 6.2/6.5 | 5.6/6.0 | 6.2/6.5 |

# LIFTING CAPACITIES DX160HT-7K

## MONO BOOM • W/O BUCKET

(UNIT: 1000 KG)

| A | 1.5 m | | 3.0 m | | 4.5 m | | 6.0 m | | Max. reach | | |
|---|---|---|---|---|---|---|---|---|---|---|---|
| B | | | | | | | | | | | A |
| **Mono boom 4.6 m • Arm 2.5 m • Shoe 800 mm • Counterweight 2.2 t** | | | | | | | | | | | |
| 7.5 m | | | | | | | | | 2.57 * | 2.57 * | 4.06 |
| 6.0 m | | | | | 3.63 * | 3.63 * | | | 2.12 * | 2.12 * | 5.65 |
| 4.5 m | | | | | 4.08 * | 4.08 * | 3.46 * | 3.31 | 2.00 * | 2.00 * | 6.52 |
| 3.0 m | | | 7.32 * | 7.32 * | 5.17 * | 4.95 | 4.42 * | 3.23 | 2.01 * | 2.01 * | 6.96 |
| 1.5 m | | | 7.32 * | 7.32 * | 6.40 * | 4.71 | 4.48 | 3.13 | 2.15 * | 2.15 * | 7.06 |
| 0.0 m | | | 7.55 * | 7.55 * | 6.8 | 4.55 | 4.40 | 3.06 | 2.44 * | 2.44 * | 6.82 |
| -1.5 m | 6.02 * | 6.02 * | 10.96 * | 8.46 | 6.75 | 4.51 | 4.39 | 3.05 | 3.05 * | 2.91 | 6.22 |
| -3.0 m | 10.10 * | 10.10 * | 9.42 * | 8.61 | 6.30 * | 4.59 | | | 4.68 * | 3.86 | 5.12 |
| **Mono boom 4.6 m • Arm 2.5 m • Shoe 900 mm • Counterweight 2.2 t** | | | | | | | | | | | |
| 7.5 m | | | | | | | | | 2.57 * | 2.57 * | 4.06 |
| 6.0 m | | | | | 3.63 * | 3.63 * | | | 2.12 * | 2.12 * | 5.65 |
| 4.5 m | | | | | 4.08 * | 4.08 * | 3.46 * | 3.36 | 2.00 * | 2.00 * | 6.52 |
| 3.0 m | | | 7.32 * | 7.32 * | 5.17 * | 5.02 | 4.42 * | 3.28 | 2.01 * | 2.01 * | 6.96 |
| 1.5 m | | | 7.32 * | 7.32 * | 6.40 * | 4.78 | 4.55 | 3.18 | 2.15 * | 2.15 * | 7.06 |
| 0.0 m | | | 7.55 * | 7.55 * | 6.91 | 4.62 | 4.47 | 3.10 | 2.44 * | 2.44 * | 6.82 |
| -1.5 m | 6.02 * | 6.02 * | 10.96 * | 8.59 | 6.86 | 4.58 | 4.46 | 3.10 | 3.05 * | 2.96 | 6.22 |
| -3.0 m | 10.10 * | 10.10 * | 9.42 * | 8.74 | 6.30 * | 4.66 | | | 4.68 * | 3.92 | 5.12 |
| **Mono boom 4.6 m • Arm 3.0 m • Shoe 800 mm • Counterweight 2.2 t** | | | | | | | | | | | |
| 7.5 m | | | | | 2.66 * | 2.66 * | | | 2.31 * | 2.31 * | 4.70 |
| 6.0 m | | | | | | | 2.29 * | 2.29 * | 2.01 * | 2.01 * | 6.13 |
| 4.5 m | | | | | 3.50 * | 3.50 * | 3.34 * | 3.34 * | 1.94 * | 1.94 * | 6.93 |
| 3.0 m | | | 6.06 * | 6.06 * | 4.62 * | 4.62 * | 4.06 * | 3.25 | 1.97 * | 1.97 * | 7.35 |
| 1.5 m | | | 9.44 * | 8.82 | 5.96 * | 4.74 | 4.49 | 3.13 | 2.12 * | 2.12 * | 7.44 |
| 0.0 m | | | 8.43 * | 8.43 * | 6.80 | 4.55 | 4.38 | 3.04 | 2.42 * | 2.35 | 7.22 |
| -1.5 m | 5.70 * | 5.70 * | 10.76 * | 8.37 | 6.71 | 4.47 | 4.34 | 3.00 | 3.00 * | 2.62 | 6.65 |
| -3.0 m | 8.88 * | 8.88 * | 10.11 * | 8.47 | 6.74 * | 4.5 | | | 4.44 * | 3.31 | 5.64 |
| -4.5 m | | | 7.11 * | 7.11 * | | | | | 5.41 * | 5.41 * | 3.81 |
| **Mono boom 4.6 m • Arm 3.0 m • Shoe 900 mm • Counterweight 2.2 t** | | | | | | | | | | | |
| 7.5 m | | | | | 2.66 * | 2.66 * | | | 2.31 * | 2.31 * | 4.70 |
| 6.0 m | | | | | | | 2.29 * | 2.29 * | 2.01 * | 2.01 * | 6.13 |
| 4.5 m | | | | | 3.50 * | 3.50 * | 3.34 * | 3.34 * | 1.94 * | 1.94 * | 6.93 |
| 3.0 m | | | 6.06 * | 6.06 * | 4.62 * | 4.62 * | 4.06 * | 3.30 | 1.97 * | 1.97 * | 7.35 |
| 1.5 m | | | 9.44 * | 8.95 | 5.96 * | 4.81 | 4.56 | 3.18 | 2.12 * | 2.12 * | 7.44 |
| 0.0 m | | | 8.43 * | 8.43 * | 6.90 | 4.62 | 4.45 | 3.09 | 2.42 * | 2.39 | 7.22 |
| -1.5 m | 5.70 * | 5.70 * | 10.76 * | 8.50 | 6.81 | 4.54 | 4.41 | 3.05 | 3.00 * | 2.66 | 6.65 |
| -3.0 m | 8.88 * | 8.88 * | 10.11 * | 8.60 | 6.74 * | 4.57 | | | 4.44 * | 3.36 | 5.64 |
| -4.5 m | | | 7.11 * | 7.11 * | | | | | 5.41 * | 5.41 * | 3.81 |

## ARTICULATED BOOM • W/O BUCKET

(UNIT: 1000 KG)

| A | 3.0 m | | 4.5 m | | 6.0 m | | 7.5 m | | Max. reach | | |
|---|---|---|---|---|---|---|---|---|---|---|---|
| B | | | | | | | | | | | A |
| **Articulated boom 4.98 m • Arm 2.5 m • Shoe 800 mm • Counterweight 2.2 t** | | | | | | | | | | | |
| 7.5 m | | | 3.23 * | 3.23 * | | | | | 1.80 * | 1.80 * | 4.95 |
| 6.0 m | | | 2.94 * | 2.94 * | 2.87 * | 2.87 * | | | 1.47 * | 1.47 * | 6.31 |
| 4.5 m | | | 3.56 * | 3.56 * | 3.47 * | 3.30 | | | 1.34 * | 1.34 * | 7.10 |
| 3.0 m | | | 4.75 * | 4.75 * | 3.97 * | 3.19 | 1.37 * | 1.37 * | 1.30 * | 1.30 * | 7.51 |
| 1.5 m | | | 6.04 * | 4.60 | 4.44 | 3.07 | 2.23 * | 2.23 * | 1.34 * | 1.34 * | 7.60 |
| 0.0 m | | | 6.70 | 4.44 | 4.34 | 2.99 | | | 1.44 * | 1.44 * | 7.38 |
| -1.5 m | 8.19 * | 8.19 * | 6.66 | 4.41 | 4.32 | 2.97 | | | 1.67 * | 1.67 * | 6.83 |
| -3.0 m | 9.95 * | 8.44 | 6.72 * | 4.48 | | | | | 3.54 * | 3.23 | 5.75 |
| **Articulated boom 4.98 m • Arm 2.5 m • Shoe 900 mm • Counterweight 2.2 t** | | | | | | | | | | | |
| 7.5 m | | | 3.23 * | 3.23 * | | | | | 1.80 * | 1.80 * | 4.95 |
| 6.0 m | | | 2.94 * | 2.94 * | 2.87 * | 2.87 * | | | 1.47 * | 1.47 * | 6.31 |
| 4.5 m | | | 3.56 * | 3.56 * | 3.47 * | 3.35 | | | 1.34 * | 1.34 * | 7.10 |
| 3.0 m | | | 4.75 * | 4.75 * | 3.97 * | 3.24 | 1.37 * | 1.37 * | 1.30 * | 1.30 * | 7.51 |
| 1.5 m | | | 6.04 * | 4.67 | 4.51 | 3.12 | 2.23 * | 2.23 * | 1.34 * | 1.34 * | 7.60 |
| 0.0 m | | | 6.81 | 4.51 | 4.41 | 3.03 | | | 1.44 * | 1.44 * | 7.38 |
| -1.5 m | 8.19 * | 8.19 * | 6.77 | 4.48 | 4.39 | 3.01 | | | 1.67 * | 1.67 * | 6.83 |
| -3.0 m | 9.95 * | 8.57 | 6.72 * | 4.55 | | | | | 3.54 * | 3.28 | 5.75 |

1. Lifting capacities are in compliance with ISO 10567:2007(E).
2. The load point is at the end of the arm.
3. * = The nominal loads are based on hydraulic capacity.
4. The nominal loads shown do not exceed 75% of tipping loads or 87% of hydraulic lifting capacity.
5. For lifting capacity with bucket, simply subtract the actual weight of the bucket from the values.
6. The configurations indicated do not necessarily reflect the standard equipment of the machine.

: Rating over front.
: Rating over side or 360°.

# STANDARD AND OPTIONAL EQUIPMENT

● Standard ○ Optional

## Engine

- ● Develon D34 G2 – Common rail 4 cylinder engine with direct fuel injection and electronic control, 4 valves per cylinder, vertical injectors, water cooled, turbo charged with air-to-air intercooler, Stage V compliant, SCR, DOC and DPF post treatment
- ● Auto-idle function
- ● Auto shut-off
- ● No EGR

## Hydraulic system

- ● Boom and arm flow regeneration
- ● Swing anti-rebound valves
- ● Spare ports (valve)
- ● One-touch power boost function
- ● Double way line high flow + Breaker piping (PE3C)
- ● Smart Power Control (SPC3)
- ● Cylinder cushioning & contamination seals
- ○ Clamshell piping (diverter valve from bucket cylinder)
- ○ Hydraulic piping low flow for rotating or tilting tool (joystick control)
- ○ Hydraulic piping for quick-coupler
- ○ Floating boom
- ○ Double pump flow

## Cab & interior

- ● Pressurized sound-insulated and CabSus mounted cab
- ● Fully adjustable air suspension seat with heater
- ● Air conditioning with climate control
- ● Pull-up type front window sun roller blind and removable lower front window
- ● Sliding left window
- ● Intermittent upper and lower windshield parralel wiper
- ● Rain visor
- ● Rear window defroster switch
- ● Adjustable PPC wrist control levers for arm boom bucket and swing
- ● Joysticks & pedal provide proportional control of auxiliary hydraulic lines
- ● Pedal for auxiliary control 1 & 2 ways
- ● Jog shuttle switch
- ● DEVELON Smart Touch – 8" touch screen, all-in-one
- ● Attachment management system
- ● Engine speed (RPM) control dial
- ● Automatic travel speed
- ● 4 operating modes & 4 working modes
- ● Electric horn
- ● Cigarette lighter
- ● Ceiling light
- ● Cup holder
- ● Multiple storage compartments (e.g. document holder under seat)
- ● Heating and cooling lunch box
- ● Flat spacious easy-to-clean floor
- ● Keyless start (Develon Smart Key) & remote door lock/unlock
- ● Anti-theft protection
- ● 12 V spare power socket
- ● Serial communication port for laptop PC interface
- ● Remote radio ON/OFF switch
- ● Loudspeakers and connections for radio
- ● Radio + MP3 (stereo) with Bluetooth streaming and handsfree call system
- ● Rear and side view camera
- ○ 360° all-around view camera (AVM)
- ○ 360° all-around view camera (AVM) + ultra sonic detection
- ○ Fully adjustable air suspension seat (heating & cooling)

## Safety

- ● Roll Over Protective Structure (ROPS)
- ● Boom and arm cylinder safety valves
- ● Overload warning device
- ● Large guard rails on upper structure and steps
- ● Rotating beacon
- ● Punched metal anti-slip plates
- ● Hydraulic safety lock lever
- ● Safety glass
- ● Hammer for emergency escape
- ● Right and left rear-view mirrors
- ● Lockable fuel cap and covers
- ● Battery cut-off switch
- ● Engine restart prevention system
- ● Emergency engine stop switch and hydraulic pump control switch
- ● Guard rails (ISO 2867:2011)
- ● Parking brake
- ● LED work lights (boom lamp, body lamps, additional lamps on cab)
- ○ LED work lights 2 additional lamps (in the front, in the rear of the cab)
- ○ Falling Objects Guard System – top and front cab guards (ISO 10262 level II and SAE J1356)
- ○ Front window upper and lower guards

## Other

- ● 4600 mm mono boom – 2500 mm arm – 2200 kg counterweight
- ● DEVELON Fleet Management Web (telematic system)
- ● Auto shut-off fuel filler pump
- ● Double element air cleaner
- ● Fuel pre-filter with water separator sensor
- ● Dust screen for radiator/oil cooler
- ● Self-diagnostic function
- ● Alternator (24 V 100 A) – Battery (2 × 12 V 100 Ah)
- ● Hydrostatic drive with 2-speed power shift transmission
- ● Remote greasing for swing circle and work group pivot points
- ○ 2100 mm arm
- ○ 3000 mm arm for mono boom only
- ○ 4980 mm articulated boom
- ○ DEVELON buckets: full range of GP HD & rock buckets
- ○ DEVELON breakers and DEVELON quick-couplers
- ○ Automatic lubrication system
- ○ Air compressor

## Undercarriage DX140LC-7K

- ● Standard fixed undercarriage 2590 mm with 600 mm shoes
- ● 600 mm triple grouser shoes
- ○ 500 mm triple grouser shoes
- ○ 500 mm rubber shoes (road liner)
- ○ 700 mm triple grouser shoes
- ○ Dozer blade for 500, 600, 700 mm shoes

## Undercarriage DX160HT-7K

- ● Special heavy duty undercarriage dedicated for forestry application
- ○ 800 mm triple grouser shoes
- ○ 900 mm triple grouser shoes

# DEVELON FLEET MANAGEMENT

## JOB SITE MANAGEMENT

## WORK EFFICIENCY MANAGEMENT

## PREVENTIVE MAINTENANCE

## PROACTIVE SERVICE




**OPERATION TREND**
Total operation hours and operation hours by mode

**FUEL EFFICIENCY***
Fuel level and fuel consumption

**LOCATION**
GPS and geo-fence

**REPORTS**
Operation report & utilization

**WARNING & ALERT**
Detect machine warnings, antenna disconnection, and geo/time fence

**FILTER & OIL MANAGEMENT**
Preventive maintenance by item replacement cycle




**TELEMATICS TERMINAL**
Terminal device is installed and connected to a machine to capture machine data.

**TELECOMMUNICATION**
Develon provides dual-mode (Mobile, Satellite) communication to maximize communication coverage.

**DEVELON FLEET MANAGEMENT WEB**
Users can monitor machine status from Develon Fleet Management Web.

*Functions may not be applied to all models. Please contact your sales representative for more information on this feature.

# OPTIONAL ATTACHMENTS

A wide range of attachments is available for your Develon excavator.
Choosing our attachments ensures you'll have the maximum performance and tranquility of use.



DEVELON H-CLASS BUCKETS (EARTH MOVING)



DEVELON G-CLASS BUCKETS (ECONOMY)



GRADING BUCKETS



DEVELON S-CLASS BUCKETS (SOFT ROCKS)



PIN-ON QUICK COUPLERS



DEVELON ORANGE PEEL GRAPPLES



DEVELON X-CLASS BUCKETS (ALL TYPES OF ROCKS)



DEVELON HB BREAKERS



DEVELON SORTING GRAPPLES

# LIST OF ATTACHMENTS

● Standard ○ Optional

**DX140LC-7K/DX160HT-7K**

- ○ Universal Pin-on Quick Coupler
- ○ Set of 2 attachment pins Ø65 mm
- ○ Develon H-class bucket (earth moving), width 642 mm, capacity 0.31 m³, 4 heavy duty teeth
- ○ Develon H-class bucket (earth moving), width 642 mm, capacity 0.31 m³, 4 ESCO teeth
- ○ Develon H-class bucket (earth moving), width 792 mm, capacity 0.42 m³, 4 heavy duty teeth
- ○ Develon H-class bucket (earth moving), width 942 mm, capacity 0.52 m³, 5 heavy duty teeth
- ○ Develon H-class bucket (earth moving), width 942 mm, capacity 0.52 m³, 5 ESCO teeth
- ○ Develon H-class bucket (earth moving), width 1042 mm, capacity 0.60 m³, 5 heavy duty teeth
- ○ Develon H-class bucket (earth moving), width 1142 mm, capacity 0.67 m³, 5 heavy duty teeth
- ○ Develon H-class bucket (earth moving), width 1142 mm, capacity 0.67 m³, 5 ESCO teeth
- ○ Develon H-class bucket (earth moving), width 1242 mm, capacity 0.74 m³, 6 heavy duty teeth
- ○ Develon G-class bucket (economy), width 540 mm, capacity 0.24 m³, 3 general duty teeth
- ○ Develon G-class bucket (economy), width 825 mm, capacity 0.39 m³, 4 general duty teeth
- ○ Develon G-class bucket (economy), width 911 mm, capacity 0.45 m³, 5 general duty teeth
- ○ Develon G-class bucket (economy), width 996 mm, capacity 0.51 m³, 5 general duty teeth
- ○ Develon G-class bucket (economy), width 1086 mm, capacity 0.59 m³, 5 general duty teeth
- ○ Develon G-class bucket (economy), width 1344 mm, capacity 0.76 m³, 6 general duty teeth
- ○ Kit 1800 mm bolt-on edge for 230104-01012
- ○ Sorting grapple MG14, 450 l, 360° rotation, jaw width 900 mm
- ○ Develon Hydraulic Breaker HB15H, 350-700 bpm, 120 dB
- ○ Develon Hydraulic Breaker HB15FH, 350-700 bpm, 120 dB



Powered by **Innovation**

**DISCOVER MORE:**

**DX140LC-7K**

**DX160HT-7K**

DEVELON

HD Hyundai Infracore Europe s.r.o.
IBC - Pobřežní 620/3, 186 00 Praha 8-Karlín
Czech Republic

©2023 DEVELON D4601270-EN (08-23)

Certain specification(s) are based on engineering calculations and are not actual measurements. Specification(s) are provided for comparison purposes only and are subject to change without notice.
Specification(s) for your individual Develon equipment will vary based on normal variations in design, manufacturing, operating conditions, and other factors. Pictures of Develon units may show other than standard equipment.