Mini Excavators

DX10Z-7

Maximum power	10.35 hp
Operating weight	1165 kg
Max. bucket capacity	0,020m²



DEVELON

DEVELON

Continuous evolution, for better.

We trace our roots to 1937 as one of Korea's first large-scale machine plants. During that time, we have consistently delivered earth-moving equipment to build critical infrastructure for the betterment of communities, societies and the wider world.

We are Develon.

Develon is a bold name that reflects our core ambition to continue developing onwards and leaving behind a positive footprint in our world. Moving forward, we will continue providing innovative products and solutions that advance the world we live in today.



Lift beyond limits

The smallest from the DEVELON Mini excavator range, the DX10Z-7 is powered by a Kubota D722 engine, delivering 10.35 hp. It features a strategically designed new boom improved lifting capacity, reaching far spots with and at the same time increased digging reach at ground level. Along with enhanced traction force and ergonomically designed operator's space in mind make it highly efficient no matter if you are working in your garden or any confined city area, the DX10Z-7 meets all your needs for efficient job completion.

Top performance

The DX10Z-7 mini excavator, though compact, is a powerhouse capable of handling a wide range of tasks withease. Its robust engine and advanced hydraulic system deliver impressive performance, allowing it to tackle digging, lifting, and grading efficiently. It combines power and precision, making it an indispensable tool for operators who need a reliable and efficient machine for vatious applications.

Versatility

Compactness empowered by its top performance enhances its versatility, making it ideal for construction sites, landscaping projects, and urban environments.

Safety

While working on a job site, the operator will feel secure due to the machine's reliability and balance during operations. Along with the retractable tracks you get further support on stability which on the other hand translates into safe working environment and peace of mind for an operator

Controlability

Its user-friendly interface, responsive hydraulic system, and ergonomic controls ensure precise and effortless operation. Operators will appreciate the intuitive joystick controls and the seamless coordination between movement and function, enchancing productivity and reducing fatigue during extended use.

Zero tail-swing

While working close to an obstacle, the DX10Z-7 enhances safety and maneuverability in confined spaces providing the peace of mind especially in confined spaces. This design ensures that the rear of the excavator stays within the width of the tracks, reducing the risk of impacts, promoting a safer working environment.


DEVELON
DEVELON
DX10Z

Reliable power in compact form

The smallest Develon excavator, the DX10Z-7, is designed for easy operation in confined work environments.

Enhanced design and performance
Powered by a 10.35 hp engine. Fast cycle times and class-leading breakout forces ensure maximum productivity, while boom and arm cylinder cushioning enhance overall smoothness making this compact, yet powerful machine perfect for various jobs.

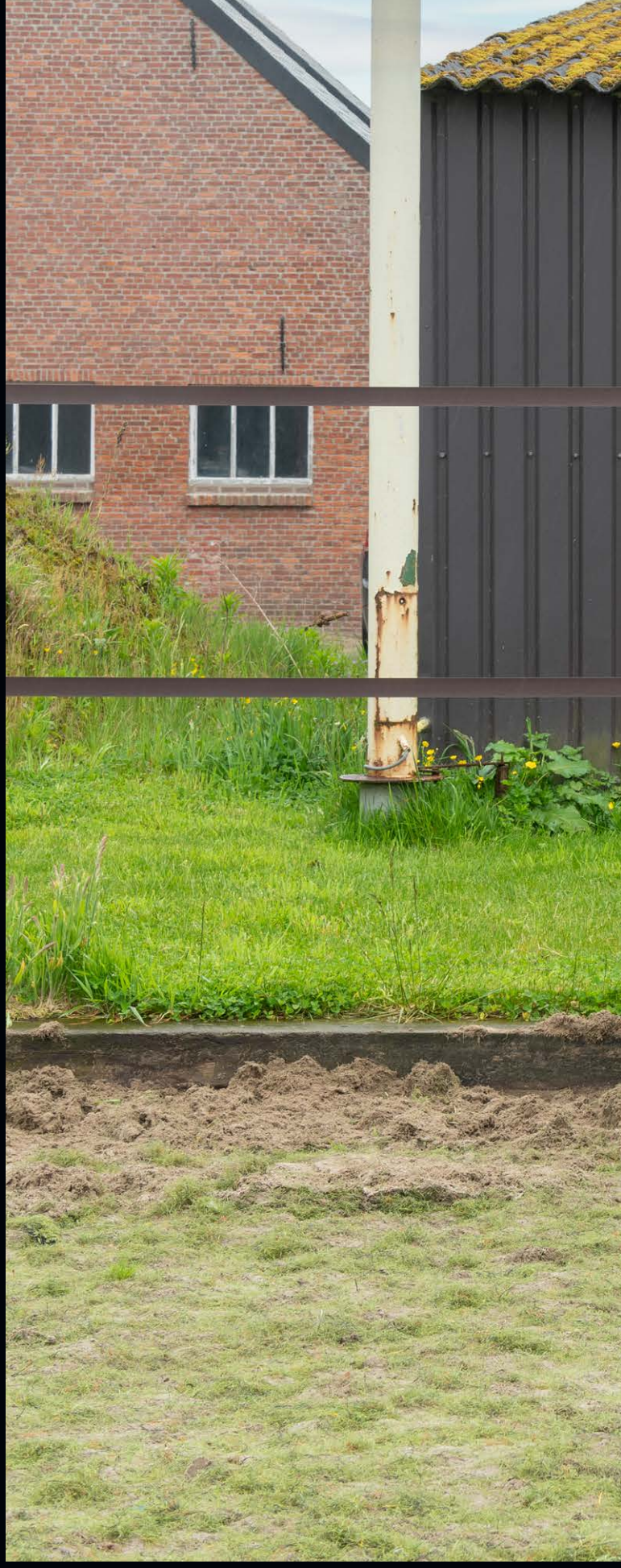



Compact build, colossal power



From every task to every challenge



Extend upward, explore downward

The machine;s advanced technology allows for smooth maneuverability, making it ideal for tight spaces and complex tasks..

Enhanced stability and lifting capacity
With enhanced stability and lifting capacity, combined with best-in-class proportional auxiliary flow, the DX10Z-7 offers exceptional versatility for operating a wide range of attachments. Its superior dumping height simplifies loading trucks, while the extended reach at ground level reduces the need for frequent repositioning when digging.

New boom design
Strategically designed with new boom design and arm length is made to increase the working range and help you get high reachable spots. Compact in design as it is can fit any space and let you do the work in tight hard accessible areas with any other Mini excavator.

The DX10Z-7 features increased dumping height and increased digging reach at ground level at the same time. The boom cylinder is positioned on the upper side of the boom, and the front assembly is safeguarded by cylinder guards to prevent collisions and damage. The optimized hydraulic hose layout, running inside the boom structure, reduces the risk of hose damage and failure, minimizing the need for repairs and downtime. Additionally, the machine's lifting capacity, bucket breakout force, arm breakout force, enhanced track length on the ground, and stability all contribute to increased traction force, making this machine ideal for demanding jobs in tight areas.

New boom design
Reduced in dimensions, DX10Z-7 fits easily on a conventional trailer and offers easier transportability thanks to new integrated upper structure tie-down points.



Lift high, reach far, stay grounded



Dig with confidence, move with stability

The DX10Z-7 features an extendable undercarriage width of up to 1100 mm, ensuring maximum stability along with zero tail swing for enhanced safety and peace of mind when working close to obstacles. Designed with the operator in mind, in includes a swivel and tilting stand system for excellent ergonomic flexibility along with the LED working lamp on the boom together enhance operator's safety and comfort on the job site..

Foldable canopy
The tops can be folded down quickly without any tools, allowing the machine to pass through most European-sized doors or narrow spaces. All you need to do is to remove the locking pin and fold the upper canopy body backward and you will be sure you will access many hard reachable tiny pace and make the job easy done.

Swing lock pin
The swing lock must be engaged to prevent rotation of the upper structure when moving forward. Especially when the excavator is being transported or parked on. The swing lock must be engaged to prevent rotation of the upper structure when moving forward. Especially when the excavator is being transported or parked on uneven terrain, as sudden swinging can cause accidents or damage to the surroundings.

Easy component access
For the eased access to the engine Dig with confidence, move with stability Lift high, reachfar, stay grounded components a maintenance window was designed under the operator's seat. Engine oil filter, fuse, deep stick are all easy reachable.

Simplified operation, maximum efficiency

The DX10Z-7 features several indicators and switches designed to enhance ease of control and minimize interruptions during operation.



Controlability

The Track extension and Blade select switches along with the Travel speed switch button, enable quick and intuitive adjustments to suir various tasks. Together, these features enable the operator to maange the machine effectively and stay updated on its working status without disrupting the job. You can control the engine speed level by adjusting
the engine speed control lever for the lowest to the highest engine speed.
It features two two pedals - one for boom and another one for aux.line both easy to activate/use.

Blade control level

After pressing the track width adjusting switch, the chassis width can be changed using the blade control lever (730/1100 mm). Accordingly, the width of the dozer blade also needs to be adjusted.

Swing lock pin

To prevent rotation of the upper stucture when moving forward, especially when the excavator is being transported or parked on uneven terrain to avoid accidents or damage, the swing lock must be engaged by aligning the upper structure with the lower frame and inserting the lock pin into the holes.

Maintenance made simple

The reinforced chassis provides strength, while the optimized boom shape ensures uniform load distribution for greater durability. Top quality materials, the most advanced computer aided designed, and endurance testing under the most demanding conditions ensure your excavator keeps on performing.

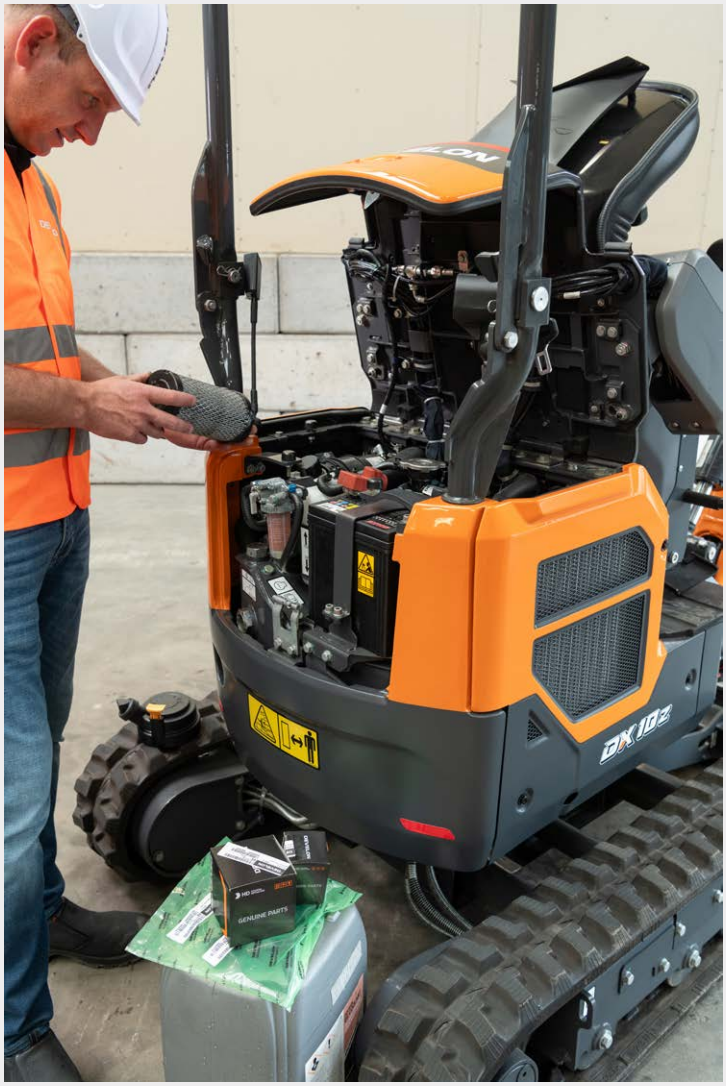

Cylinder over boom

The workgroup of this excavator boasts a cylinder-over-boom design, eliminating the risk of cylinder damage. Additionally, the auxiliary hydraulic hoses are routed inside the boom to prevent damage during operation. These features significantly enhance durability.

Lockable cap

A unique and secure access point for all maintenance checks is provided.

Designed to last

The DX10Z-7 is designed for low maintenance with longer intervals - resulting in more machine availability on-site. Meanwhile, skilled DEVELON-trained technicians are available to provide extra support when needed..

Develon Fleet Management › Management on the job site › Work efficiency management › Preventive management › Proactive service



Monitor your equipment from anywhere

To compete and succeed, your equipment needs to maximize job site productivity and the bottom line. Develon machines do both. To ensure a high return on investment, we add more premium features as standard equipment on every model. Our standard features are often options that other manufacturers only provide at extra cost. By including them as standard, Develon gives you a competitive edge — helping operators work more efficiently and improving safety during long days on the field.

Telematics terminal
Terminal device is installed and connected to a machine to capture machine data.

Telecommunication
Develon provides dual-mode (Mobile, Satelite) communication to maximize communication coverage.

Develon Fleet Management WEB
Users can monitor machine status from Develon Fleet Management Web.

Operation trend	Total operation hours and operation hours by mode.
Fuel efficiency*	Fuel level and fuel consumption
Reports & Location	Operation report & utilization. GPS and geo-fence.
Warning & Alert	Detect machine warnings, antenna disconnection, and geo/time fence
Filter & Oil management	Preventive maintenance by item replacement cycle.

*Functions may not be applied to all models. Please, contact your sales representative for more information on this feature.

Attachments

Versatile DEVELON-7 Series mini excavators can use a variety of attachments so you can do more than dig — expanding your capabilities on every job. DEVELON attachments are built to DEVELON machine specifications for superior reliability and performance.

Pin-on quick coupler	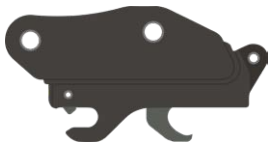	The quick coupler perfectly fits your Develon Mini Excavator as it is constructed based on your machine's kinematics. You're guaranteed a precise and secure connection, as the new quick coupler features perfectly fitted stoppers. This quick coupler has been modeled to endure extreme conditions and work optimally in any loading scenario.
Digging buckets with teeth		The digging buckets are equipped with thick and chamfered side cutters, and bottom wear straps covering 90% of the bottom of the bucket.
Grading bucket	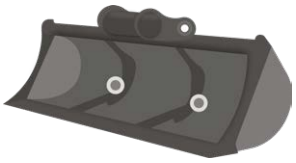	The grading bucket is equipped with one or more web plates to increase the stiffness of the bucket.


DEVELON
DEVELON

DEVELON

TECHNICAL SPECIFICATIONS

DX10Z-7



Engine

Make	KUBOTA
Model	D722
Number of cylinders	3
Rated power, gross	10.35 hp (7.6 kW) @ 2050 rpm
Max. torque, net	4.08 kgf.m @ 1600 rpm
Displacement	0.719 l
Bore and stroke	67 mm × 68 mm
Air cleaner	Double elements

Hydraulics

Main pumps	2 × 10.4 l/min @
Pilot pump (gear design)	3.1 min @ 2300 rpm
Max. pressure aux. line	176 bar
Swing (crossover relief)	69 bar

Maximum System Pressure

Boom/arm/bucket (normal mode)	210 kg/cm^2
Swing (crossover relief)	165 kg/cm^2

Swing Mechanism

Swing speed	8.7 rpm
Swing torque	152.7 kgf.m

Performance

Travel speed (low – high)	1.7 / 3.4 km/h
Traction force, max. (drawbar pull)	12.75 Kn
Max. Gradeability	30°
Bucket digging force	10.8 kN
Arm digging force	6.3 kN

Environment

Sound level (ISO 6395)	91 dB (A)
Cabin sound level	76 dB (A)

Refill Capacities

Fuel tank	14.2 l
Cooling system (radiator capacity)	2 l
Hydraulic tank	10.8 l
Engine oil	2.8 l
Travel device	2 × 0.33 l

Dimensions

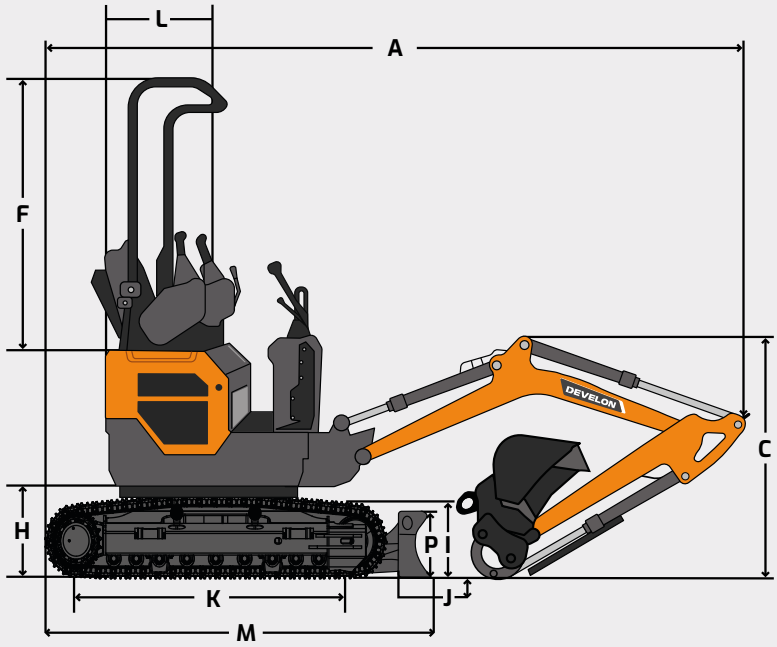

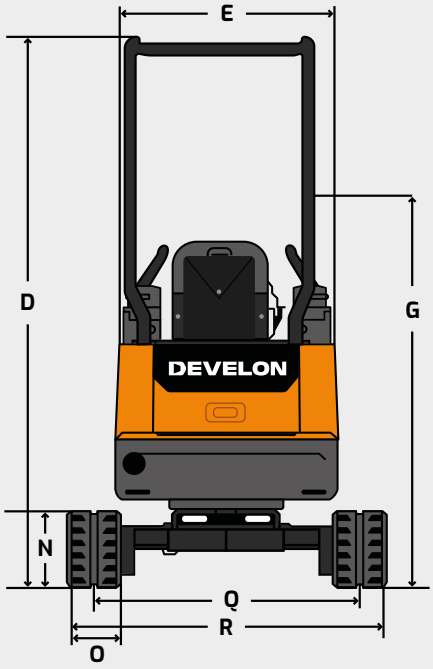

Machine Dimensions

		Unit	DX10Z-7
	Front	-	2 Pillar Canopy
	Boom length	mm	1450
	Arm length	mm	890
	Bucket capacity (ISO)	m^3	0.02
	Undercarriage / Shoe –	–	Rubber
A	Overall length	mm	3010
C	Overall height - Boom	mm	1095
D	Overall height - Canopy	mm	2220
R	Overall width (Retracted/Extended)	mm	730 / 1100
	Rear swing radius	mm	550
	Ground clearance	mm	150
	Rear end distance	mm	550
E	House width	mm	730
	Canopy width	mm	730
G	Height over cover	mm	-
H	Counterweight clearance	mm	395
N	Track height	mm	328.2
M	Track length	mm	1353.1
K	Tumbler distance	mm	1025
Q	Track gauge (Retracted / Extended)	mm	550 / 920
O	Shoe width	mm	-
J	Dozer digging depth	mm	220
I	Dozer lift clearance	mm	227
P	Dozer blade height	mm	200
	Distance to dozer end	mm	890

Working range

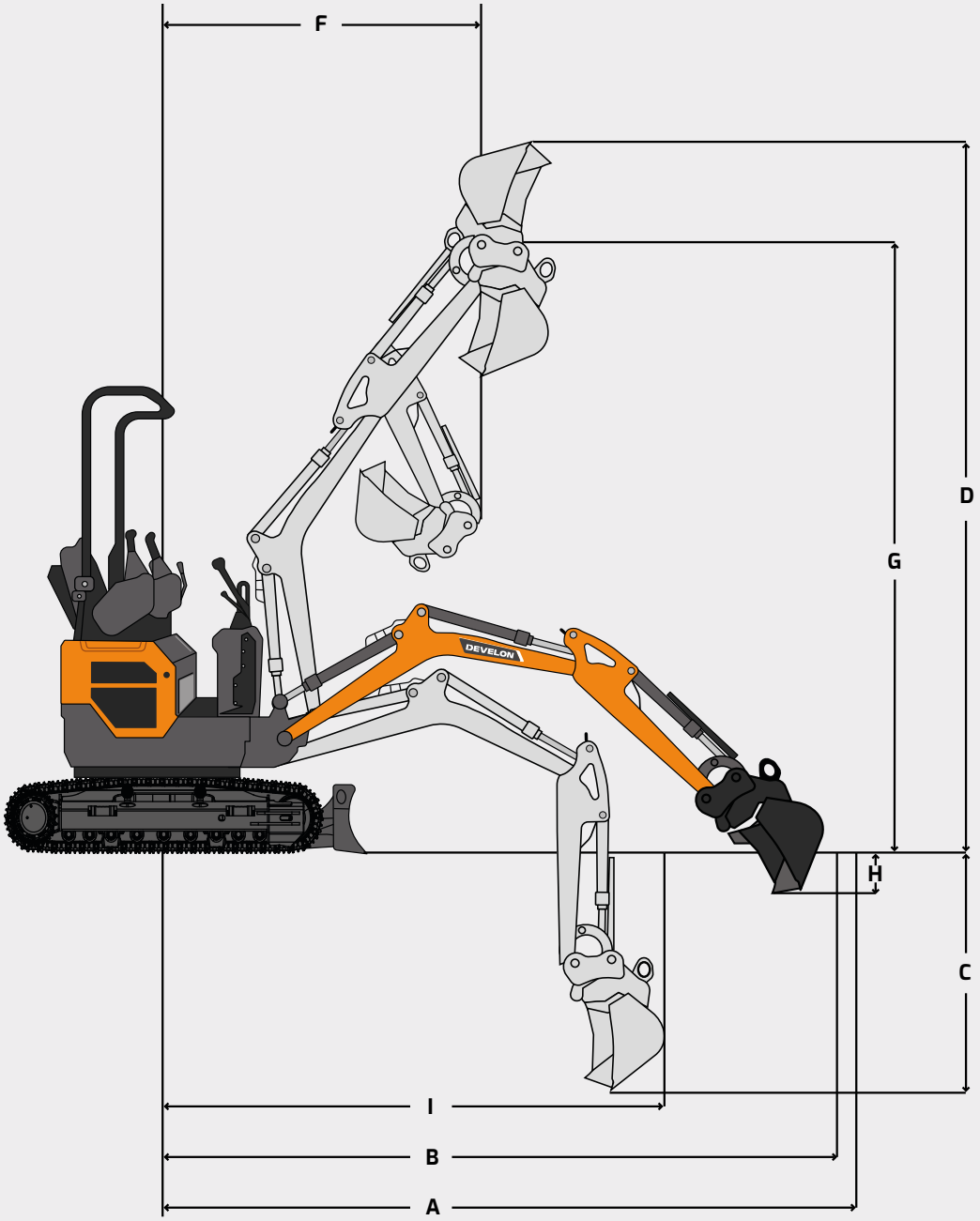

Working Range		Unit	DX17Z-7
	Boom type	mm	1450
	Operating weight	kg	1165
	Bucket type (SAE)	m^3	0.02
	Arm type	mm	890
A	Max. digging reach	mm	3400
B	Max. digging reach (ground)	mm	3355
C	Max. digging depth	mm	2205
D	Max. digging height	mm	3050
F	Min. swing radius	mm	1410 (1110)
G	Max. bucket pin height	mm	2645
H	Max. vertical wall depth	mm	1025
I	Max. Radius vertical	mm	2935

Lifting Capacities - DX10Z-7

	A	1.0 m		1.5 m		2.0 m		2.5 m		Max. reach		
B												A

DX10Z-7 + BLADE UP + Boom 1.45 m · Arm 0.8 m · w/o Bucket · Shoe (Rubber) 180 mm · Unit 1000 kg

2.5 m									0.28	0.29	Max. at (m) 1.83
2.0 m					0.25 *	0.25			0.18	0.18	Max. at (m) 2.42
1.5 m					0.24	0.25	0.17	0.18	0.14	0.15	Max. at (m) 2.74
1.0 m			0.37	0.39	0.23	0.24	0.16	0.17	0.13	0.13	Max. at (m) 2.91
0.5 m	*	*			0.22	0.23	0.36	0.17	0.12	0.13	Max. at (m) 2.96
0 m				0.34	0.21	0.22	0.15	0.16	0.12	0.13	Max. at (m) 2.90
-0.5 m		0.55*	0.55*	0.34	0.21	0.22	0.15	0.16	0.14	0.14	Max. at (m) 2.73
-1.0 m		0.69	0.73	0.34	0.21	0.22			0.17	0.17	Max. at (m) 2.39

DX10Z-7 + Blade down · Boom 1.45 m · Arm 0.89 m · w/o Bucket · Shoe (Rubber) 180 mm · Unit 1000 kg

2.5 m						*			0.33**	0.33*	Max. at (m) 1.83
2.0 m					0.25*	0.25*			0.28* *	0.28*	Max. at (m) 2.42
1.5 m					0.27*	0.27*	0.28*	0.28*	0.25* *	0.25*	Max. at (m) 2.74
1.0 m			0.47*	0.47*	0.36*	0.36*	0.30*	0.30*	0.25* *	0.25*	Max. at (m) 2.91
0.5 m				*	0.43*	0.43*	0.32*	0.32*	0.24* *	0.24*	Max. at (m) 2.96
0 m			0.59*	0.59*	0.44*	0.44*	0.32*	0.32*	0.23 *	0.23* *	Max. at (m) 2.90
-0.5 m	0.55*	0.55*	0.59*	0.59*	0.39*	0.39*	0.27*	0.27*	0.21*	0.21*	Max. at (m) 2.73
-1.0 m	0.89*	0.89*	0.89*	0.46	0.30*	0.30*			0.20*	0.20*	Max. at (m) 2.3916

Rating over front.
Rating over side or 360°.

1. Lifting capacities are in compliance with ISO 10567 2007.
2. The load point is at the end of the arm.
3. * limited hydraulic lift capacities.
4. Lift capacities do not exceed 75% of minimum tipping loads or 87% of hydraulic lifting capacity.
5. For lifting capacity with bucket, simply subtract the actual weight of the bucket from the values.
6. Lift capacities apply only to the machine as originally manufactured and normally equipped by the manufacturer.
7. The configurations indicated do not necessarily reflect the standard equipment of the machine.

Standard & Optional equipment

Standard	DX10Z-7
TOPS canopy (Tip Over Protective Structure TOPS)	▪
1450 mm boom	▪
890 mm arm	▪
Hydraulically activated track expansion from 730 to 1100 mm , 180 mm rubber track	▪
730 mm dozer blade with two blade extensions (1100 mm extended)	▪
Two-speed travel	▪
1st auxiliary line (double acting) on arm ·	▪
Hydraulic joystick control	▪
Control console locks	▪
Boom light metal protection	
Retractable seat bel	▪

Develon Warranty

Your key to equipment protection and peace on mind

Unlock unparalleled protection for your heavy construction equipment with Develon. Our robust warranties and premium protection plans ensure your investment is safeguarded and adds lasting value.

Tailored warranty plans
Choose from a range of affordable protection plans, designed exclusively for Develon customers through our authorized dealers. These plans turn your machine's price into a strategic investment, not just an expense.

Develon Premium: Premium protection
Opt for Develon Premium to experience unmatched security, reliability, and overall value. This top-tier plan shields your equipment from unexpected costs and minimizes downtime, letting you focus on what matters – getting the job done*.

Act now!
Contact our authorized Develon Dealers today and fortify your equipment investment. With a seamless process and lasting benefits, Develon ensures your heavy construction equipment remains in peak condition.

Choose Develon Extended Warranty: Play safe and secure your investments.

* Only for ADT, HEX and WLO.
Offer may vary based on model.

Powered by **Innovation**

DEVELON

Space for dealer's stamp

HD Hyundai Infracore Europe s.r.o.
IBC – Pobrezni 620/3,
18600 Praha 8 – Karlin, Czechia

©2024 HD Hyundai Infracore. All rights reserved.

D4601310-EN (04-24)

Certain specification(s) are based on engineering calculations and are not actual measurements. Specification(s) are provided for comparison purposes only and are subject to change without notice. Specification(s) for your individual Develon equipment will vary based on normal variations in design, manufacturing, operating conditions, and other factors. Pictures of Develon units may show other than standard equipment.