DEVELON

Wheeled Excavators

DX100W-7



Maximum power	100 hp
Operating weight	10.7~11.1 t
Bucket capacity	0.28 m^3

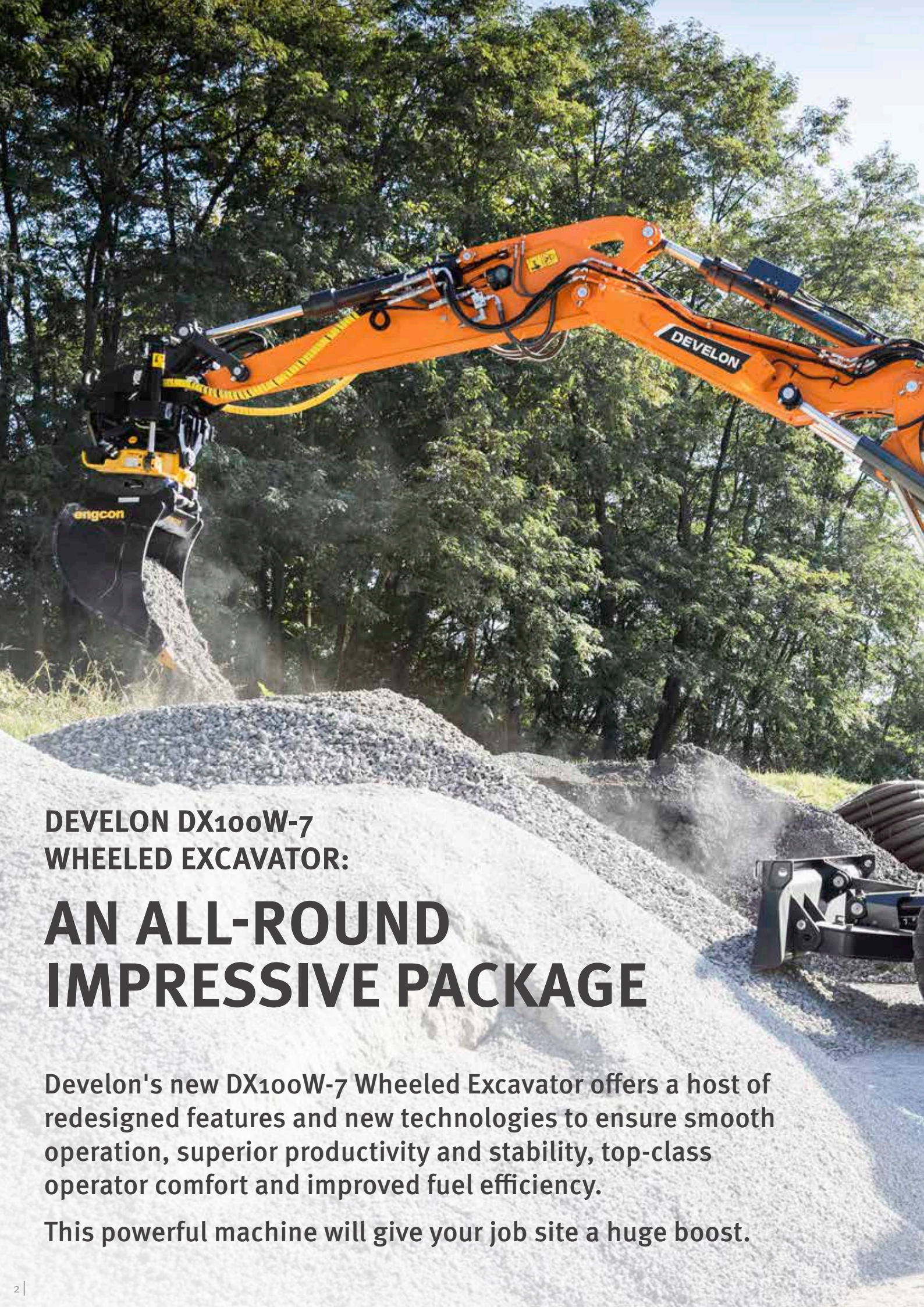

DEVELON DX100W-7 WHEELED EXCAVATOR:

AN ALL-ROUND IMPRESSIVE PACKAGE

Develon's new DX100W-7 Wheeled Excavator offers a host of redesigned features and new technologies to ensure smooth operation, superior productivity and stability, top-class operator comfort and improved fuel efficiency.

This powerful machine will give your job site a huge boost.


DX 100 W

RAISE PROFITS, PRODUCTIVITY & FUEL EFFICIENCY

TOP PERFORMANCE IN A VERSATILE PACKAGE

- A compact & powerful machine for the best adaptability to any work site.
- Large hydraulic capacity of a tool carrier.
- Works in narrow spaces thanks to boom swing and articulation.
- Travels with unparalleled speed (up to 38 km/h depending on country regulations).

EFFICIENCY

Working reach around 8 meters and huge lifting capacities thanks to front axle lock & balanced weight distribution.

CONTROLLABILITY

3 work modes and 3 power modes, proportional control, 8" user-friendly TFT LCD color monitor (adjustable position), 2 mechanical gears with 2 speed modes (high and low).
Control of the boom swing from the joystick.



COMFORT

One of the most spacious cabs in the market, with low noise & vibration levels and excellent all-round visibility. Extra-large door for easy access. Fully adjustable heated air suspension seat, air conditioning with climate control as standard.

POWER

The new Stage V engine, with DOC, DPF and SCR, is exceptionally powerful – with high torque at low revs.

EASY MAINTENANCE

Easy access to all compartments. Maintenance data directly available from control panel.

SAFETY

New AVM (360° view) camera with ultrasonic sensors to increase the safety on the job site, ideal when people are walking around the machine.

FRONT AXLE

Ram lock available for more stability & performance in handling or digging operations.

PRODUCTIVITY

Superior digging, pulling and traction forces.




STAGE V
COMPLIANT
DEVELON
DX 100 W



TOP PERFORMANCE AND FUEL EFFICIENCY

THE POWER TO RAISE PRODUCTIVITY

- The DX100W-7 is equipped with the latest generation Develon engine
- Stage V compliant, this engine boasts extremely low emissions because reducing our environmental impact is paramount to us
- Exhaust gases are purified by Selective Catalytic Reduction (SCR) technology, a Diesel Oxidation Catalyst (DOC) and a Diesel Particulate Filter (DPF) with no maintenance before 5000 hours

EFFICIENT FUEL MANAGEMENT

- Choice of 3 power modes and 3 working modes for optimal power and reduced fuel consumption in all conditions
- Electronic control of fuel consumption optimizes efficiency with an Auto-idle function saves fuel.

VARIABLE PRESSURE TURBOCHARGER

Provides optimal air flow to the engine combustion chamber under all speed and load conditions, so that exhaust gas is cleaner and fuel economy is improved.

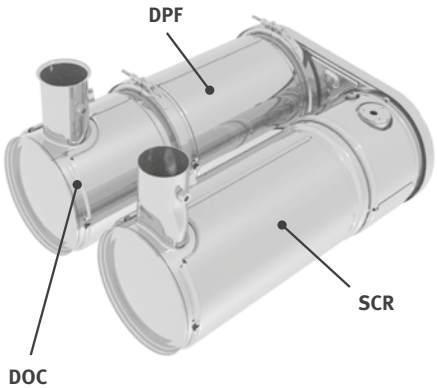



RELIABILITY – THE HABIT OF A LIFETIME

In your profession, you need equipment you can depend on. At Develon, we put durability and reliability at the core of our machines' development. Our materials and structures undergo stringent testing for strength and resilience under the most extreme conditions.

DESIGNED FOR LONG-TERM, ALL-ROUND, HEAVY-DUTY PERFORMANCE

UNDERCARRIAGE DURABILITY

A rigid, welded frame provides excellent durability. Efficient routing of hydraulic lines, transmission and rear differential protection and heavy-duty axles make the undercarriage perfect for wheeled excavator applications. An oscillating axle lock is available for digging and lifting operations.

NEW DRIVE LINE CONCEPT

The new travel motor and powershift transmission control in the drive line provide comfortable travel due to increased smoothness, improved hydraulic retarding and improved gear shifting.

ADVANCED DISC BRAKE SYSTEM

The new improved system allows a more efficient braking of the machine. This eliminates the rocking effect associated with working on wheels. The axles are designed for low maintenance, and the oil change intervals have been increased, further reducing owning and operating costs.

HEAVY-DUTY AXLES

The front axle offers wide oscillating and steering angles. The transmission is mounted directly on the rear axle for protection and optimum ground clearance.

STRENGTHENED BOOM AND ARM

During the development of our machines, we use intensive testing to calculate the best load distribution throughout the boom structure.
Combined with thicker material, this means that element fatigue is limited and both reliability and component life are increased. To better protect the base of the arm, reinforced bars have been added and the arm center and end boss have been strengthened.

ADVANCED FILTRATION

- Fuel filters and water separator: a filter-type high-performance water separator effectively captures moisture in the fuel, reducing impurities and helping minimize any fuel-related issues. Pre-filters and dual main filters as standard achieve a high degree of purity that minimizes fuel system failures.

PIN AND BUSHING ADVANCED TECHNOLOGY

Highly lubricated metal is used for the boom pivot to increase the component's lifetime and lengthen greasing intervals. The bucket pivot features EM (Enhanced Macrosurface) bushings. These have a tailored surface pattern and self-lubricating coating for optimized greasing and more efficient debris removal. Ultra-hard wear-resistant discs and bucket pivot polymer shims increase durability even more.

Exclusive parallel dozer and independent stabilizers are symmetrical for better customization – which also facilitates remarketing for the second-hand business:

- Large reinforced covers protect the dozer and stabilizer cylinders
- The dozer blade design facilitates pulling and mixing of materials
- The stabilizers are kept well within the machine envelope, and the position of the pins is kept high to avoid bumping while moving over the ground
- Parts in contact with the ground have been carefully designed to prevent damage to the surfaces
- Wide pads to reduce ground pressure
- Lifting eyes on dozer for secure transport – 4 additional eyes are on the undercarriage




1
2
3
4
5
6
7
8
9
engcon
102

1. Parallel wiper
2. Develon Smart Touch
3. Proportional switch
4. Joystick 1-touch function button
5. Breaker/Booster button
6. Redesigned pedals
7. Flat, spacious, easy-to-clean floor
8. Joysticks and switches are integrated in adjustable control consoles
9. Heated seat
10. Separate seat height adjustment lever and cushion tilting function

OPERATING IN HIGH COMFORT

THE IDEAL WORKSPACE – DESIGNED AROUND YOU

With one of the most spacious cabs in the market, the DX100W-7 is designed to provide you with the best possible working conditions. The ergonomic controls and the easy-to-view color monitor place the machine firmly in your hands.

BEST-IN-CLASS OPERATOR ENVIRONMENT

- Industry-leading engine saves on fuel and meets all noise regulations, providing exceptional operator comfort
- CabSus mount suspension system dampens high vibrations and provides outstanding protection against impact
- Fully adjustable steering column ensures optimal visibility
- Heated air suspension seat as standard
- Air conditioning with climate control

ISO-CERTIFIED SAFETY

The sophisticated state-of-the-art ROPS cab is pressurized and ISO-certified for your safety. Standard LED cab and boom lights, large side mirrors and rear-view camera improve all-round visibility (AVM 360° cameras and ultrasonic sensors as options). Other standard safety features include: automatic overheating alarm warning, low oil pressure sensor, engine emergency cut-off switch,

THE HIGHEST STANDARDS OF EFFICIENCY AT YOUR FINGERTIPS

Highly sensitive & low-effort joysticks and clear convenient controls enable you to work safely, smoothly & confidently with minimum effort. Proportional auxiliary flow means precision control, smoothness & efficiency when using attachments.

KING SIZE TOUCHSCREEN

The wide 8" touchscreen provides easy scrolling through the different menus, including power settings and auxiliary hydraulics settings. It also allows you to connect a Bluetooth device or listen to your favorite radio station.





4-WHEEL STEERING FOR GREATER AGILITY

- All components are well protected
- Double tires or single wide tires available

TOTAL CONTROL IN ALL SIMPLICITY

DYNAMIC POWER MANAGEMENT

- Automatic travel speed range selection (slow/fast)
- Activating the power boost control system increases digging force by 10%
- A 1-touch deceleration button immediately reduces engine speed to low idle
- Auto-idling starts 4 seconds (adjustable) after all controls are returned to neutral – reducing fuel consumption and noise levels in the cab

3 STEERING MODES; 4 STEERING WHEELS

City work requires a very agile machine, able to move around in very confined spaces. To meet this need, the DX100W-7 can be optionally equipped with 2 steering axles, with a crab travel mode, or a mode with a reduced rotation radius.

3 WORK MODES AND 3 POWER MODES

These modes deliver the needed power, according to your specific application, while minimizing fuel consumption:

- Work modes: 1-way mode, 2-way mode, Digging mode and Lifting mode
- Power modes: Power mode, Standard mode, Economy mode

EXPERT FINGERTIP CONTROL

- The new multi-function 8" Develon Smart Touch screen displays all useful information in a visual and intuitive format.
- At a glance, you can check the machine's status and settings to achieve optimal efficiency.
- Develon's unique jog shuttle switch gives you easy and precise control over all machine functions.
- Highly sensitive and low-effort joysticks enable you to work safely, smoothly and confidently.
- The proportional thumb switches on the joysticks can be mounted horizontally or vertically, as the operator prefers, for optimal control of hydraulic attachments.

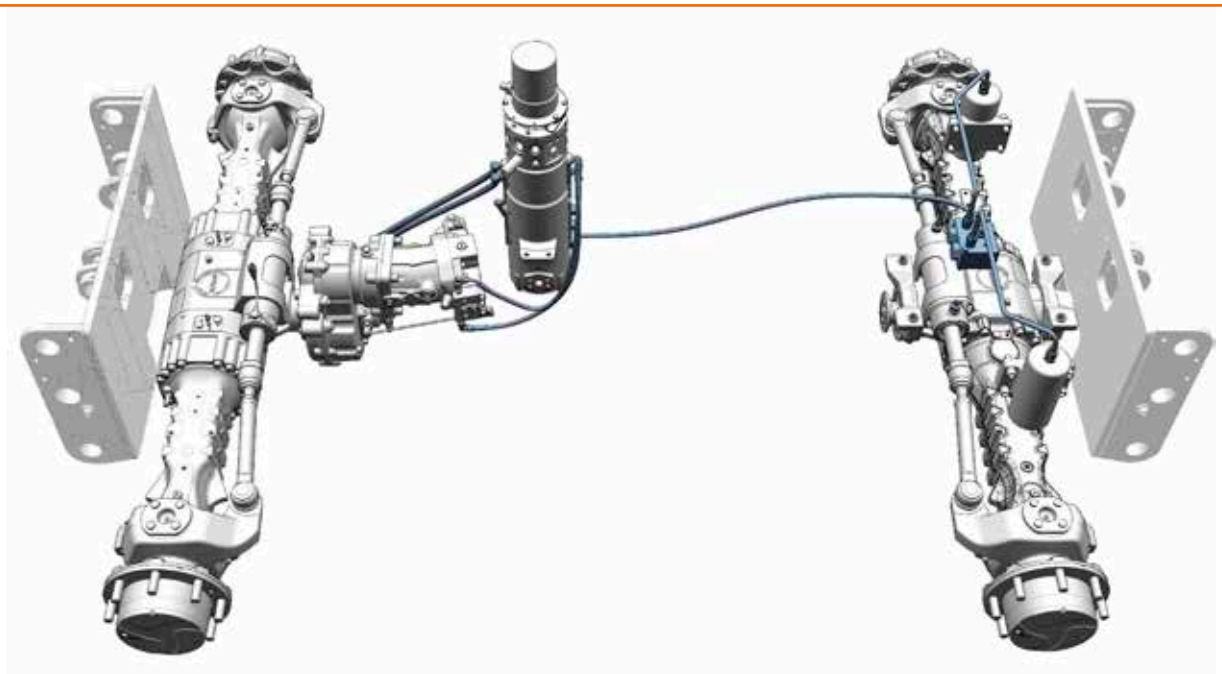





MORE DURABILITY – LESS MAINTENANCE

DEPENDABLE PERFORMANCE FOR LOW LIFETIME COST

Quality materials, the most advanced computer-aided design and endurance testing under the most demanding conditions ensure your excavator will keep on performing.

MAINTENANCE ACCESS MADE SIMPLE

- A battery cut-off switch makes it easy to disconnect the battery during long-term storage
- The hour meter display can be easily checked from ground level
- For extra accessibility and servicing convenience, all filters (engine oil filter, fuel pre-filter, fuel filter and pilot filter) are accessible from ground level. Engine parts can be easily reached via the rear bonnet.

ADVANCED PIN & BUSHING TECHNOLOGY

The boom and arm are connected with castle nut and split pin for a simple, robust, reliable system. Highly lubricated metal is used for the boom pivot to increase the component's lifetime and lengthen greasing intervals. The bucket pivot features EM (Enhanced Macrosurface) bushings, which have a tailored surface pattern and self-lubricating coating to optimize greasing and make removal of debris more efficient. Ultra-hard wear-resistant discs & bucket pivot polymer shim increase durability even more.

UNDERCARRIAGE DURABILITY

A rigid, welded frame provides excellent durability. Efficient routing of hydraulic lines, transmission and rear differential protection and heavy-duty axles make the undercarriage perfect for wheeled excavator applications. An oscillating axle lock is available.

STRENGTHENED BOOM & ARM

Finite Element Analysis has been used to calculate the best load distribution throughout the boom structure. Combined with thicker material, this means that element fatigue is limited and both reliability and component life are increased. To better protect the base of the arm, reinforced bars have been added and the arm center and end boss have been strengthened.

TECHNICAL SPECIFICATIONS

ENGINE

Designed to deliver superior performance and fuel efficiency, the Develon D34 diesel engine fully meets the latest Stage V emission regulations. To optimize machine performance, the engine uses high-pressure fuel injectors, air-to-air inter-cooler and electronic engine controls. 4-cycle water-cooled, wastegate turbocharged, Diesel Oxidation Catalyst (DOC), Selective Catalytic Reduction (SCR) and Diesel Particulate Filter (DPF).

Model

Develon D34

No. of cylinders

4

Rated power at 2000 rpm

SAE J1995 75 kW (100 hp)

Max. torque at 1400 rpm

43.8 kgf·m

Idle (low - high)

1000 - 2100 rpm

Displacement

3409 cm³

Bore × stroke

98 mm × 113 mm

Starter

12 V / 2.5 kW

Batteries – Alternator

12 V, 150 Ah – 12 V, 140 A

Air filter

Double element air cleaner and pre-filtered Cyclone Turbo dust separator

HYDRAULIC SYSTEM

The e-EPOS (Electronic Power Optimising System) is the brain of the excavator – minimising fuel consumption and optimizing the efficiency of the hydraulic system for all working conditions.
To harmonize the operation of the engine and the hydraulics, the e-EPOS is connected to the engine's electronic control unit (ECU) via a data transfer link.

- The hydraulic system enables independent or combined operations
- 2 travel speeds offer either increased torque or high speed
- Cross-sensing pump system for fuel savings
- Auto-deceleration system
- 3 operating modes, 3 power modes
- Flow and pressure control of auxiliary hydraulic circuits from control panel
- Computer-aided pump flow control

Maximum system pressure

Work 286 kgf/cm²
Travel 408 kgf/cm²

Pumps	Type	Max. flow at 2000 rpm	Relief valve settings
Main	Axial piston	200 l/min	295 bar
Pilot	Gear	23.2 l/min	28 bar
Steering	Gear	36.6 l/min	125 bar
Brake	Gear	13.2 l/min	125 bar
Travel	Axial piston	112 l/min	435 bar

UNDERCARRIAGE

Extremely robust construction throughout – made of high-quality durable materials with all welded structures designed to limit stresses. Lateral chassis welded and rigidly attached to undercarriage. Heat-treated connecting pins. Heavy-duty front axle with automatic or operator-controlled (on/off/auto) front axle oscillation lock.

Tire dimensions

8.25 - 20-14 PR

Overall width

2450 mm

Wheel base

2240 mm

Tread width

1944 mm

Oscillation angle

± 6° (without fender)

HYDRAULIC CYLINDERS

High-strength steel piston rods and cylinder bodies. Shock-absorbing mechanism fitted in all cylinders for shock-free operation and extended piston life.

Cylinders	Quantity	Bore × rod diameter × stroke (mm)
Lower boom	1	115 × 70 × 775
Upper boom	2	100 × 55 × 410
Arm	1	100 × 65 × 846
Bucket	1	85 × 55 × 690
F-Cradle + R-Dozer	2	100 × 60 × 179
F-Dozer + R-Stabilizer	4	
F-Stabilizer + R-Stabilizer	4	
Chocking	2	75 × 75 × 100
Boom swing	1	110 × 60 × 684

CAB

The air-conditioning and heating systems are integrated for optimal climate control. An automatically-controlled fan supplies the pressurized and filtered cab air, which is distributed throughout the cab from multiple vents.
The air suspension, adjustable operator's seat includes a seat belt. The operator can adjust the ergonomic seat and joystick console separately according to his preferences.

A-weighted emission sound pressure level at the operator's position, LpAd (ISO 6396:2008)

Declared: 72 dB(A)
Measured: 73 dB(A)

A-weighted sound power level, LwAd (2000/14/EC)

Declared: 97 dB(A)
Measured: 98 dB(A)

SWING MECHANISM

The swing mechanism uses an axial piston motor, driving a 2-stage planetary reduction gear bathed in oil for maximum torque.

- Swing bearing: single-row, shear type ball bearing with induction hardened internal gear
- Internal gear and pinion immersed in lubricant
- Increased swing torque reduces swing time
- The swing brake for parking is activated by spring and released hydraulically

Maximum swing speed

10.5 rpm

Maximum swing torque

1820 kgf·m

FLUID CAPACITIES

Fuel tank	160 l
Cooling system	16 l
AdBlue® (DEF) tank	20 l
Hydraulic oil tank	140 l
Engine oil	12.6 l
Swing device	1.5 l

DRIVE

The wheels are driven by a bent axial piston engine via a 2-speed powershift transmission. In addition to the 2-speed powershift transmission there is also an economy mode and a switch for the creep speed. A button makes it possible to pass from high to low in work mode. Two travel speed ranges offer a choice between increased torque or high speed.

Travel speed 1st gear (low/high)

5.4 / 16.9 km/h

Travel speed 2st gear (low/high)

12.9 / 37.4 km/h

Maximum traction force

4.2 t

Minimum turning radius

5738 mm (4 wheel steering: 3697 mm)

Gradeability

35° / 70%

BRAKES

Dual multi-disc circuit with sintered metal discs for extended service life. Braking system activated by a pump and accumulator circuits. Automatic brakes for standard, released when pressing the transmission pedal. Spring-applied hydraulically released parking brake mounted on the transmission shaft.

Accumulators

0.75 l – 30 bar

ARM

Arm Type	Length (mm)	Weight (kg)	Digging force (ISO) (kN)
Standard	2250	242	36.5

BUCKET

Bucket Type	Capacity (m³) ISO	Width (mm)		Weight (kg)	Digging force (ISO) (kN)
		With side cutters	W/O side cutters		
Standard	0.28	816	700	235	58.6

TECHNICAL SPECIFICATIONS

COMPONENT WEIGHTS

Item	Weight (kg)	Remarks
Upper structure	3997	Without front assembly and counterweight
Cabin assembly	600	With operator (75 kg), without OPG (100 kg)
Undercarriage – including front cradle and rear dozer	3719	With swing bearing, double tire, 2 wheel steering, without fender (174 kg)
Dozer	596	
Dozer cylinder	70	2 × 35 kg
Front axle	413	
Rear axle – non-steering	414	
Rear axle – steering (optional)	520	
Tire and rim assembly – double tire	672	4 × 168 kg
Tire and rim assembly – single tire (optional)	496	4 × 124 kg
Undercarriage – including front dozer and rear stabilizer	4109	With swing bearing, double tire, 2 wheel steering, without fender (174 kg)
Dozer	596	
Dozer cylinder	70	2 × 35 kg
Stabilizer	421	
Stabilizer cylinder	70	2 × 35 kg
Undercarriage – including front and rear stabilizer	3933	With swing bearing, double tire, 2 wheel steering, without fender (174 kg)
Stabilizer	421	Front and rear
Stabilizer cylinder	140	4 × 35 kg
Front assembly	1607	
Lower boom	275	
Upper boom	259	
Boom cylinder for lower boom	109	
Boom cylinder for upper boom	81.4	2 × 40.7 kg
Arm	241	
Arm cylinder	77	
Bucket	234.5	
Bucket cylinder	58	
Counterweight	1350	

OPERATING WEIGHT

(with 0.28 m³ bucket, articulated boom (1890 mm lower boom + 1880 mm upper boom), 2250 mm arm and 1350 kg counterweight)

Operating weight	11073 kg	10788 kg	10682 kg	11073 kg
Steering type	2 wheel	4 wheel	2 wheel	2 wheel
Wheel type	double	double	double	double
Chassis attachment – front	dozer	cradle	cradle	stabilizers
Chassis attachment – rear	stabilizers	dozer	dozer	stabilizers

DIMENSIONS

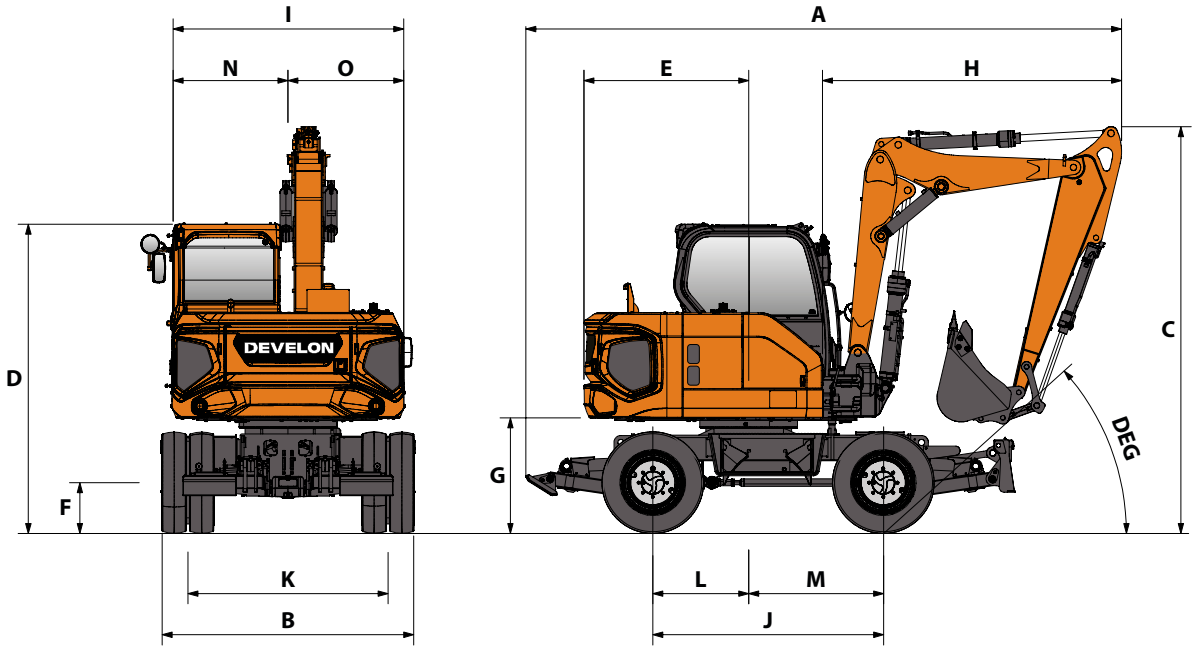

DIMENSIONS

		Unit	Single tire	Double tire
			Rear dozer	Rear stabilizer
A	Overall length (travel*)	mm	5809	5687
A'	Overall length (transport**)	mm	7319	7281
B	Overall width	mm	2450	2450
C	Overall height (travel*)	mm	3941	3952
D	Overall height (to top of cab)	mm	3000	3011
E	Tail swing radius	mm	1600	1600
F	Minimum ground clearance	mm	317	328
G	Upper structure ground clearance	mm	1099	1110
L/M	Center to wheel	mm	932 / 1308	932 / 1308
I	Upper structure width	mm	2250	2250
J	Wheel base	mm	2240	2240
K	Tread width	mm	1987	1944
	Dozer blade – max. lifting height	mm	350	350
	Dozer blade – max. lowering depth	mm	175	175
	Dozer blade – height	mm	500	500

* Road homologation
** Dozer at ground, front at ground

WORKING RANGE

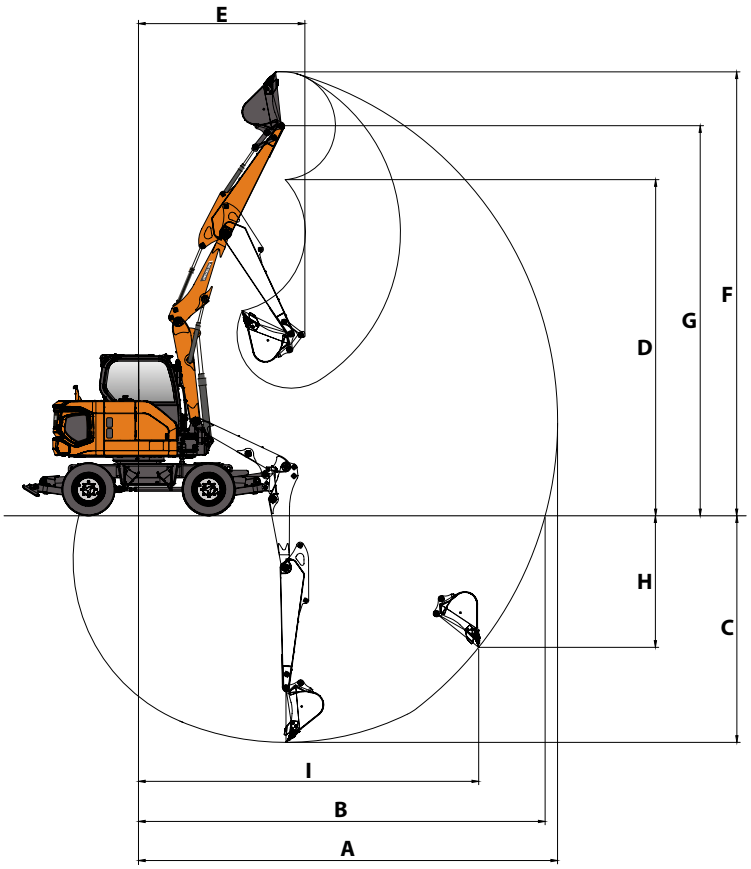

WORKING RANGE

		Unit	Articulated boom
Boom length		**mm**	**1890 mm lower boom + 1880 mm upper boom**
Arm length		**mm**	**2250**
Bucket capacity		**m³**	**0.28**
A	Max. digging reach	mm	7820
B	Max. digging reach (ground)	mm	7605
C	Max. digging depth	mm	4245
D	Max. dumping height	mm	6250
E	Min. swing radius	mm	3105
F	Max. digging height	mm	8265
G	Max. bucket pin height	mm	7255
H	Max. vertical wall depth	mm	3670
I	Max. radius vertical	mm	4800
	Boom swing angle (left)	°	60
	Boom swing angle (right)	°	60

LIFTING CAPACITIES

ARTICULATED BOOM • W/O BUCKET

(UNIT: 1000 KG)

A / B	Chassis Frame Attachment	1.5 m		3.0 m		4.5 m		6.0 m		Max. reach		
												A
Articulated boom (1890 mm lower boom + 1880 mm upper boom) • Arm 2250 mm • Counterweight 1350 kg												
6.0 m	F-Cradle + R-Dozer Down					2.01*	2.01*			1.88*	1.88*	4.91
	F-Dozer + R-Stabilizer Down					2.01*	2.01*			1.88*	1.88*	4.91
	F-Stabilizer + R-Stabilizer Down					2.01*	2.01*			1.88*	1.88*	4.91
4.5 m	F-Cradle + R-Dozer Down					1.92*	1.92*	1.75*	1.41	1.55*	1.36	6.10
	F-Dozer + R-Stabilizer Down					1.92*	1.92*	1.75*	1.54	1.55*	1.49	6.10
	F-Stabilizer + R-Stabilizer Down					1.92*	1.92*	1.75*	1.39	1.55*	1.34	6.10
3.0 m	F-Cradle + R-Dozer Down					2.24*	2.19	1.77*	1.39	1.47*	1.16	6.67
	F-Dozer + R-Stabilizer Down					2.24*	2.24*	1.77*	1.52	1.47*	1.27	6.67
	F-Stabilizer + R-Stabilizer Down					2.24*	2.15	1.77*	1.36	1.47*	1.14	6.67
1.5 m	F-Cradle + R-Dozer Down					2.64*	2.02	1.85*	1.33	1.51*	1.10	6.80
	F-Dozer + R-Stabilizer Down					2.64*	2.22	1.85*	1.46	1.51*	1.21	6.80
	F-Stabilizer + R-Stabilizer Down					2.64*	1.98	1.85*	1.31	1.51*	1.08	6.80
0.0 m	F-Cradle + R-Dozer Down			3.11*	3.11*	2.68*	1.92	1.76*	1.29	1.41*	1.15	6.54
	F-Dozer + R-Stabilizer Down			3.11*	3.11*	2.68*	2.11	1.76*	1.42	1.41*	1.27	6.54
	F-Stabilizer + R-Stabilizer Down			3.11*	3.11*	2.68*	1.88	1.76*	1.26	1.41*	1.13	6.54
-1.5 m	F-Cradle + R-Dozer Down	3.36*	3.36*	3.40*	3.40*	2.15*	1.91			1.17*	1.17*	5.81
	F-Dozer + R-Stabilizer Down	3.36*	3.36*	3.40*	3.40*	2.15*	2.10			1.17*	1.17*	5.81
	F-Stabilizer + R-Stabilizer Down	3.36*	3.36*	3.40*	3.40*	2.15*	1.87			1.17*	1.17*	5.81
-3.0 m	F-Cradle + R-Dozer Down									0.70*	0.70*	4.04
	F-Dozer + R-Stabilizer Down									0.70*	0.70*	4.04
	F-Stabilizer + R-Stabilizer Down									0.70*	0.70*	4.04

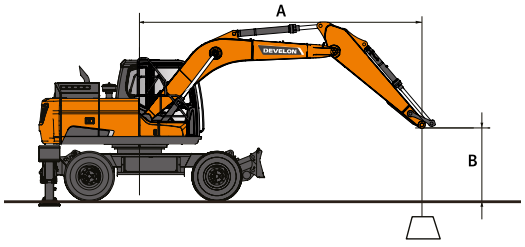

: Rating over front.
: Rating over side or 360°.

1. Lifting capacities are in compliance with ISO 10567:2007(E).
2. The load point is at the end of the arm.
3. * = The nominal loads are based on hydraulic capacity.
4. The nominal loads shown do not exceed 75% of tipping loads or 87% of hydraulic lifting capacity.
5. For lifting capacity with bucket, simply subtract the actual weight of the bucket from the values.
6. The configurations indicated do not necessarily reflect the standard equipment of the machine.

STANDARD AND OPTIONAL EQUIPMENT

● Standard ○ Optional

Engine

- ● Develon D34, Stage V compliant, SCR, DOC and DPF post treatment, water-cooled diesel engine with Wastegate Turbocharger and air-to-air intercooler
- ● Auto-idle function

Hydraulic system

- ● Boom and arm flow regeneration
- ● Swing anti-rebound valves
- ● Spare ports (valve)
- ● 2-way high flow auxiliary line
- ● 1-way breaker piping with direct return to tank
- ● Cylinder cushioning & contamination seals

Cab & Interior

- ● Sound-insulated and CabSus mounted cab
- ● Adjustable air suspension seat with adjustable headreast and armrest
- ● Air conditioning with climate control
- ● Pull-up type front window sun roller blind and removable lower front window
- ● Sliding left & right window
- ● Intermittent windshield wiper
- ● Rear window defroster switch
- ● Adjustable PPC wrist control levers for arm, boom, bucket and swing
- ● Joysticks & pedal provide proportional control of auxiliary lines for attachments
- ● Adjustable tiltable steering column
- ● Pedal for auxiliary control 1 & 2 ways
- ● Jog shuttle switch
- ● Cruise control function
- ● DEVELON Smart Touch – 8" touch screen, all-in-one
- ● Attachment management system
- ● Engine speed (RPM) control dial
- ● Automatic travel speed
- ● 3 operating modes, 3 power modes
- ● Electric horn
- ● Ceiling light
- ● Cup holder
- ● Multiple storage compartments (e.g. document holder under seat)
- ● Storage area (tools etc.)
- ● Flat, spacious, easy-to-clean floor
- ● Anti-theft protection
- ● 12 V spare power socket
- ● Serial communication port for laptop PC interface
- ● Remote radio ON/OFF switch
- ● DAB radio with Bluetooth streaming and handsfree call system

Safety

- ● Roll Over Protective Structure (ROPS)
- ● Boom and arm cylinder safety valves
- ● Overload warning device (OWD)
- ● Rotating beacon
- ● Rear and side view cameras
- ● Hydraulic safety lock lever
- ● Safety glass
- ● Hammer for emergency escape
- ● Right and left rear-view mirrors
- ● Lockable fuel cap and covers
- ● Battery cut-off switch
- ● Engine restart prevention system
- ● Parking brake
- ● Work lights
- ● Road lights
- ● LED work lights
- ○ Falling Object Protective Structure (FOPS)
- ○ LED light 1 additional lamp (on top of cab)
- ○ 360° all-around view camera (AVM)
- ○ Ultrasonic detection

Other

- ● Articulated boom (1890 mm lower boom + 1880 mm upper boom) – 2250 mm arm – 1350 kg counterweight
- ● DEVELON Fleet Management Web (telematic system)
- ● Eletric fuel filler pump
- ● Double element air cleaner
- ● Fuel pre-filter with water separator sensor
- ● Screen for radiator/oil cooler
- ● Self-diagnostic function
- ● Alternator (12 V, 140 A) – Battery (12 V, 150 Ah)
- ● 4-speed travel system
- ● Remote greasing for swing circle and work group pivot points
- ● Guards for boom work lights
- ○ Rotating piping (Pero)
- ○ Clamshell piping
- ○ Quick coupler piping
- ○ Road homologation (depending on countries)
- ○ Bucket lock valve

Undercarriage

- ● Front cradle
- ● Rear dozer blade
- ● Double tires 8.25 - 20-14 PR
- ● Front axle oscillation lock modes (on/off/auto)
- ● Lockable tool box
- ● Rear & front chain tightening eyes
- ○ Front stabilizer + rear dozer
- ○ Front dozer blade + rear stabilizer
- ○ 4 stabilizers
- ○ 4 wheel steering (Turning radius: 3.7 m)
- ○ Single wide tires 500/45-20

Powered by **Innovation**

DISCOVER MORE:
DX100W-7

DEVELON

DOOSAN Infracore Europe s.r.o.
IBC - Pobřežní 620/3, 186 00 Praha 8-Karlín
Czech Republic

©2023 DEVELON D4601112-EN (03-23)

Certain specification(s) are based on engineering calculations and are not actual measurements. Specification(s) are provided for comparison purposes only and are subject to change without notice.
Specification(s) for your individual Develon equipment will vary based on normal variations in design, manufacturing, operating conditions, and other factors. Pictures of Develon units may show other than standard equipment.