DEVELON

## Crawler Excavators

# DX1000LC-7




| | |
|---|---|
| Maximum power | 469 hp |
| Operating weight | 97.0 ~ 99.5 t |
| Bucket capacity | 5.4 ~ 6.8 $m^3$ |

DEVELON DX1000LC-7 CRAWLER EXCAVATOR:

# MADE FOR THE TOUGHEST APPLICATIONS

Lift your business to the next level with the DX1000LC-7 Develon excavator.

Strong undercarriage, and the highest engine power and hydraulic flow in the market, with total control of fuel consumption, to offer the lowest possible cost per ton.




DEVELON

# RAISE PROFITS, PRODUCTIVITY & FUEL EFFICIENCY

## HIGH PRODUCTIVITY AND LOW COST OF OWNERSHIP

Delivers higher productivity and reduced fuel consumption in an efficient and comfortable work environment.

## RELIABILITY

Designed for the toughest applications and the most abrasive materials.

## SAFETY

Your safety is our priority: 360° camera system, large side mirrors, powerful LED work lights, anti-slip steps and platforms, guard rails on upper structure.

## MASS EXCAVATION

2 Heavy Duty (HD) front combinations available to match various conditions. Mass excavation front with large bucket size or heavy-duty fronts when long reach is needed.

## SWING BEARINGS

Unique design of crossed bearings, for better stress distribution, and increased lifetime.



## UNDERCARRIAGE DURABILITY

Heavy-duty undercarriage, with large rollers and sprocket, enhanced frame for the toughest applications.



## EASY MAINTENANCE

Automatic greasing system as standard, all filters easily accessible, compressor with air gun as option, everything designed for easy maintenance.

## COMFORT

One of the most spacious cabs in the market, with low noise & vibration levels and excellent all-round visibility. Fully adjustable heated air-suspension seat, air conditioning with climate control as standard.

## ENGINE

Exceptionally powerful – with high torque at low revs – the Perkins 2806J engine combines reliability and low environmental impact. This Stage V compliant 6-cylinder engine delivers 469 kW at 2000 rpm.

## ADVANCED FILTRATION

Highest efficiency filters & cleaners remove water, dust & particles to protect your investment optimally.

## OPERATE AT EASE

All important information is at your fingertips with the new easy-to-use 8" touch screen. Exclusive jog shuttle switch, 4 work & 4 power modes, proportional control.

## EXCELLENT FUEL EFFICIENCY

The Smart Power Control (SPC) system increases fuel efficiency by adjusting the power to meet the application's needs. The system delivers the exact amount of oil needed to avoid any loss of energy.




STAGE V
COMPLIANT
DEVELON
DEVELON

## D·ECOPOWER+


NO LOSS
Elec. pump
Hydraulic flow
NO LOSS
Elec. sensing line
EPOS. Controller
Work load
Optimized hydraulic power
Work load
Optimized hydraulic power



# TOP PERFORMANCE AND FUEL EFFICIENCY

## THE POWER TO RAISE PRODUCTIVITY

- The DX1000LC-7 is equipped with the latest generation of Perkins engine
- Stage V compliant, this engine boasts extremely low emissions because reducing our environmental impact is paramount to us
- Exhaust gases are purified by Selective Catalytic Reduction (SCR) technology, a Diesel Oxidation Catalyst (DOC) and a Diesel Particulate Filter (DPF)

## EFFICIENT FUEL MANAGEMENT

- Choice of 4 power modes and 4 working modes guarantees optimum performance in all conditions
- Smart Power Control (SPC3) system: reduces engine speed and adjusts pump torque according to work conditions. The system automatically adjusts engine power and hydraulic output to improve fuel efficiency and reduce emissions. 2 systems (Variable Speed Control and Pump Torque Control) work together to improve efficiency while maintaining productivity.
- Engine auto-shut-off: shuts down the engine after the machine has been idling for a specified time. The operator can set the delay before shut-off via the touchscreen

## ASYMMETRIC TURBOCHARGER

High-efficiency asymmetric turbocharger uses a design with 2 different sized scrolls to stream exhaust across the turbine wheel at different velocities.

## THE MOST ADVANCED HYDRAULIC SYSTEM (D-ECOPOWER+)

This new electronic main pump accurately calculates the amount of pump flow required for each actuator, thereby maximizing productivity (faster operation) and avoiding unnecessary fuel loss.








Swing Motor




MVC




Main Pump




Engine

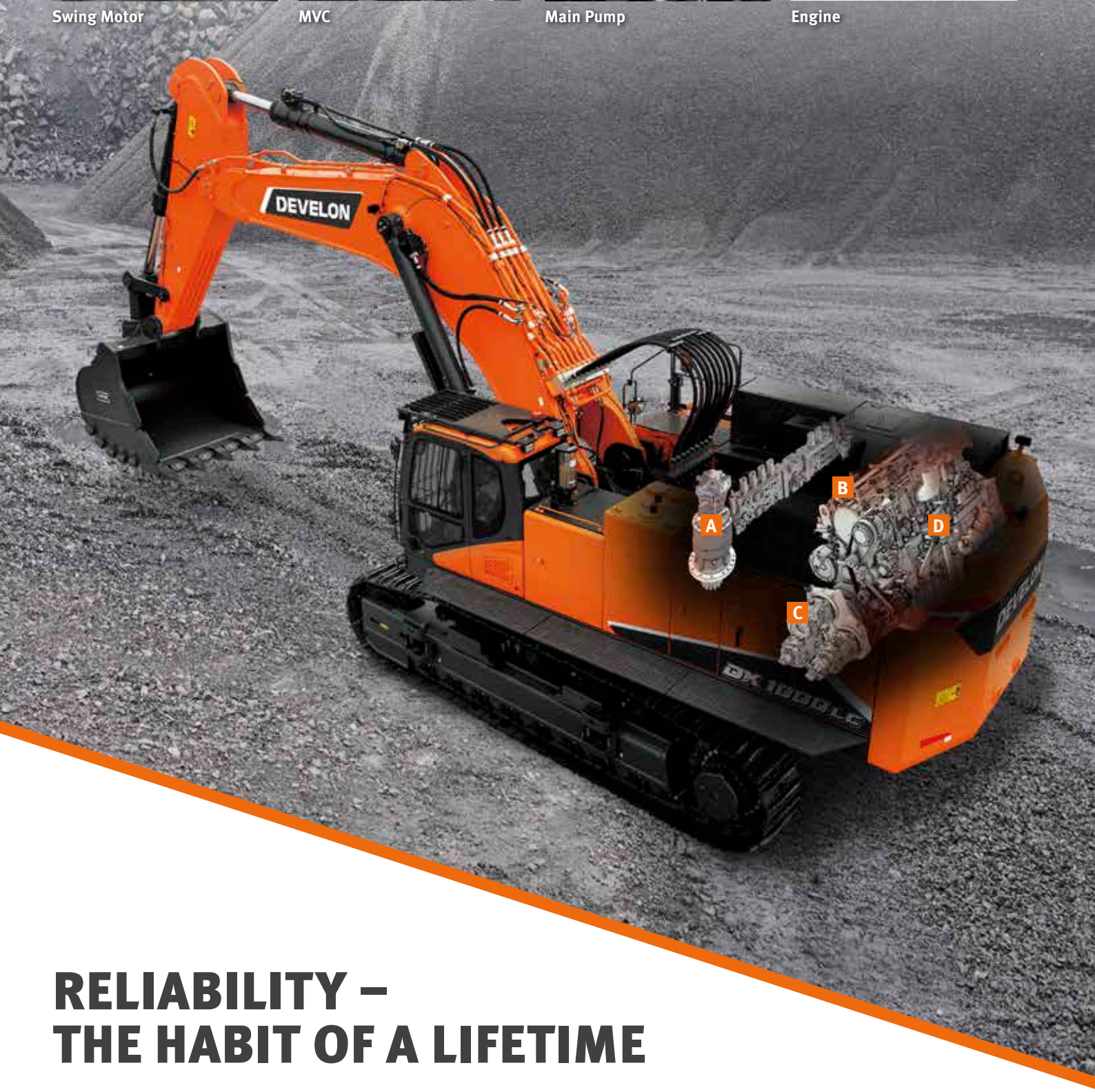


# RELIABILITY – THE HABIT OF A LIFETIME

In your profession, you need equipment you can depend on. At Develon, we put durability and reliability at the core of our machines' development. Our materials and structures undergo stringent testing for strength and resilience under the most extreme conditions.

# DESIGNED FOR LONG-TERM, ALL-ROUND, HEAVY-DUTY PERFORMANCE

## QUALITY-PROVEN MAIN COMPONENTS

Manufactured with the finest quality main components customized precisely for large equipment, this new machine offers Best-in-Class power and durability.

## STRUCTURE

Develon offers a whole new structure designed specifically for mining operations, keeping your excavator running at all times in rugged harsh environments.

## HEAVY-DUTY FRONT

The boom and arm have been specially developed for the toughest applications, such as quarrying or mass excavation, which considerably enhances the overall durability of the machine.

## CROSSED ROLLER SWING BEARINGS

Unique crossed bearing design provides longer lifetime by distributing stress more evenly.

## UNDERCARRIAGE

Our heavy-duty undercarriage further increases the durability of your machine.

## HEAVY-DUTY SPROCKET

Our heavy-duty sprocket further increases your machine's durability.

## BOOM

- Boom foot design to increase the pin strength and decrease one-sided wear of pin.
- Flat steel plate for dispersing machine stress.
- Welding design to increase welding part lifetime.
- Inner reinforced plate changed to disperse stress.

## ARM

- Bottom steel plate to increase strength of arm structure.
- Arm center boss to lower stress.
- Arm welding design to decrease stress.



**Protected hydraulic system**



**Heavy-duty under cover**



**Frame**

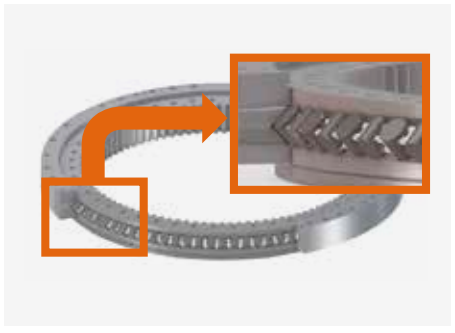

**Crossed roller swing bearings**

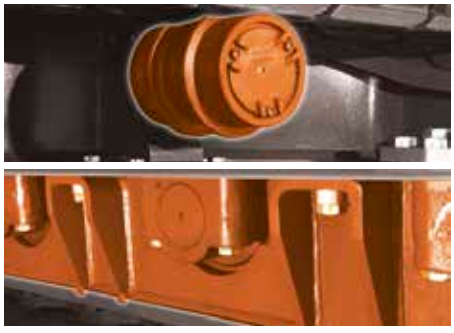

**Undercarriage**



**Heavy-duty sprocket**

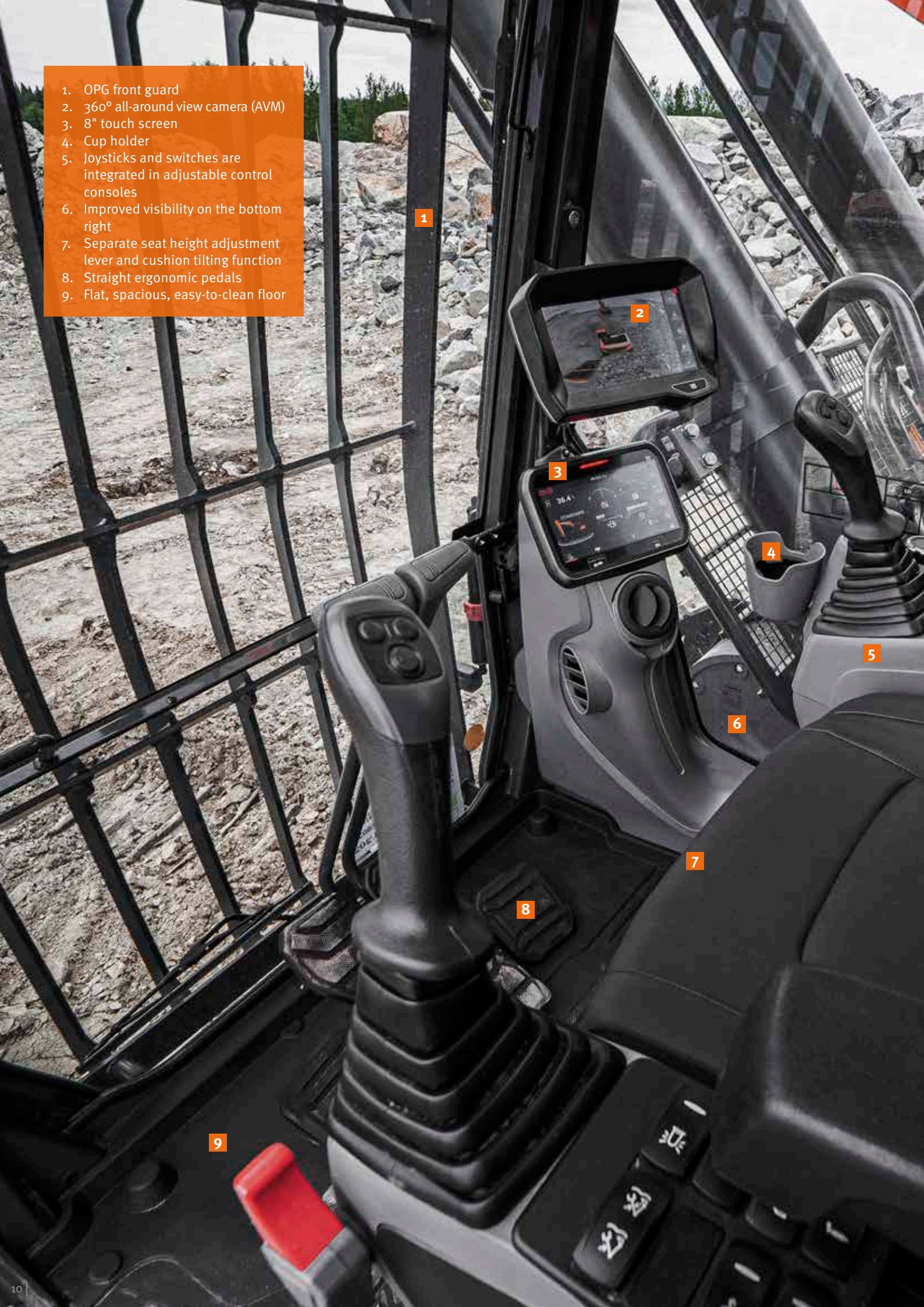


1. OPG front guard
2. 360° all-around view camera (AVM)
3. 8" touch screen
4. Cup holder
5. Joysticks and switches are integrated in adjustable control consoles
6. Improved visibility on the bottom right
7. Separate seat height adjustment lever and cushion tilting function
8. Straight ergonomic pedals
9. Flat, spacious, easy-to-clean floor



# OPERATING IN HIGH COMFORT

## BEST-IN-CLASS OPERATOR ENVIRONMENT

The DX1000LC-7 is designed to provide you with the best possible working conditions. The sophisticated state-of-the-art cab is pressurized and compliant with level 2 FOPS protection when equipped with FOPS guard for your safety. A high-quality heated seat with air suspension provides maximum operator comfort.

## CAB SUSPENSION

The cab's suspension system (CabSus mount) dampens vibrations and provides outstanding protection against impact. This system absorbs shocks and vibrations much more effectively than a conventional silentblock suspension system.

## DEVELON SMART TOUCH

The wide 8" touchscreen provides easy scrolling through the different menus, including power settings and auxiliary hydraulics settings. It also allows you to connect a Bluetooth device or listen to your favorite radio station.

## 360° ALL-AROUND VIEW CAMERA (AVM) SYSTEM

The 360° camera system gives you full view of the machine's surroundings.

## DEVELON SMART KEY

We bring automotive standards and comfort to construction machinery

- Search function
- Coming/leaving home light function
- Remote door opening
- Keyless engine start

## ERGONOMICALLY DESIGNED PEDALS

Ergonomically designed travel pedals placed in the middle. Pedal angle adjusted to relieve pressure on ankle and joints, reducing fatigue and lightening the operator's load.









1. Develon Smart Key
2. Shear buttons
3. Breaker/booster button
4. Starter switch (Start/Stop button)
5. Engine speed control dial
6. Travel speed selector switch
7. Light switch
8. Cab work light switch
9. After-treatment system switch
10. Bluetooth control panel
11. Air conditioning and heating control panel

# TAKE A SEAT IN BUSINESS CLASS

The ergonomic controls and the easy-to-view color monitor place the machine firmly in your hands.

# TOTAL CONTROL IN ALL SIMPLICITY

## DYNAMIC POWER MANAGEMENT

- Automatic travel speed range selection (slow/fast)
- A one-touch deceleration button immediately reduces engine speed to low idle
- Auto-idling starts 4 seconds (adjustable) after all controls are returned to neutral – reducing fuel consumption and noise levels in the cab

## "INTELLIGENT FLOATING BOOM" MODE

The “intelligent floating boom” function allows the boom to move up and down freely according to the application:

- Hydraulic breaker setting: during boom down operation, the boom moves down freely under its own weight. The result is reduced shock and vibration and longer breaker service life
- Full float setting: during boom down selection, the boom is allowed to rise and fall as required while the bucket is drawn across the ground

## EXPERT FINGERTIP CONTROL

- The new multi-function 8" touchscreen displays all useful information in a visual and intuitive format
- At a glance, you can check the machine’s status and settings to achieve optimal efficiency
- Develon’s unique jog shuttle switch gives you easy and precise control over all machine functions
- Highly sensitive and low-effort joysticks enable you to work safely, smoothly and confidently
- The proportional thumb switches on the joysticks can be mounted horizontally or vertically, as the operator prefers, for optimal control of hydraulic attachments




## 4 WORK MODES AND 4 POWER MODES + BOOM / SWING PRIORITY CONTROL

Delivers the needed power according to your specific application while minimizing fuel consumption:

- 1-way mode, 2-way mode, digging mode and lifting mode
- Power plus mode, power mode, standard mode, economy mode
- Boom / swing priority control allows you to control operating modes with just 1 button – resulting in more comfortable and productive operation optimized for various work environments

### BOOM PRIORITY MODE

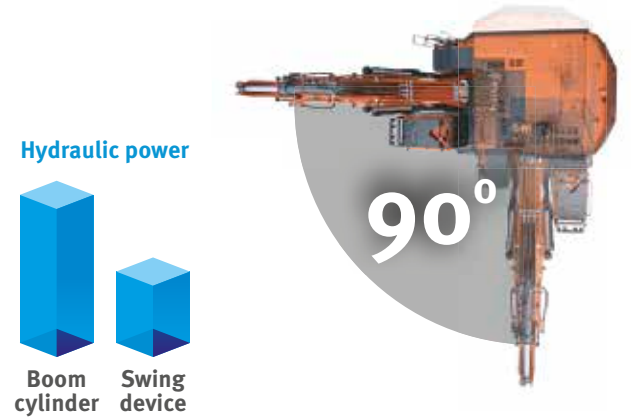


### SWING PRIORITY MODE

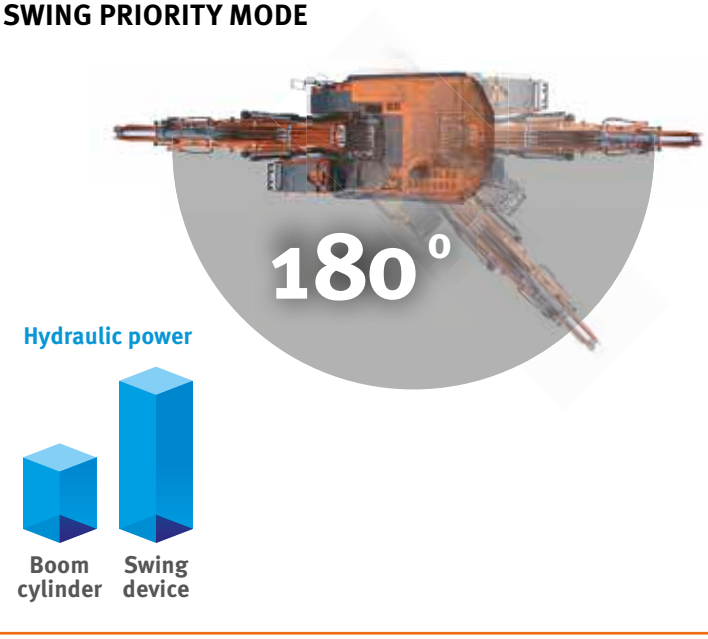

# SIMPLE MAINTENANCE FOR MAXIMUM UPTIME






## AIR COMPRESSOR

Air gun in your cab helps you keep the environment clean and comfortable.




## WIDE CATWALK

Maintenance is made easier with 520 mm catwalk.

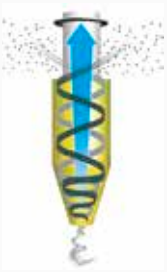

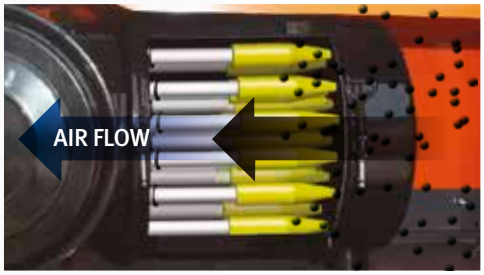


## HEAVY-DUTY AIR CLEANER

2-stage air cleaner protects engine from dust and contaminating particles – avoids downtime and is easy to maintain.




## REVERSIBLE FAN

- Rotating cooling fan in reverse direction is possible.
- Able to blow away dust on radiator and oil cooler easily to save time & effort.

## CENTRALIZED FUEL FILTRATION SYSTEM

Water separator, pre-fuel filter and main filter are grouped together to increase engine life and prevent machine failures, making machine inspection or maintenance much easier with one simple access.

## ELECTRIC FUEL TRANSFER PUMP (ETP)

Use this switch to easily refill fuel for your machine after its inspection or repair.

## AUTO GREASE SYSTEM (AGS)

This new auto grease filling device helps reduce maintenance time significantly and prevents unexpected downtime.

# TECHNICAL SPECIFICATIONS

## ENGINE

Designed to deliver superior performance and fuel efficiency, the Perkins 2806J diesel engine fully meets the latest Stage V emission regulations. To optimize machine performance, the engine uses high-pressure fuel injectors, air-to-air inter-cooler and electronic engine controls. 4-cycle water-cooled, wastegate turbocharged, Diesel Oxidation Catalyst (DOC), Selective Catalytic Reduction (SCR) and Diesel Particulate Filter (DPF).

**Model**

Perkins 2806J

**No. of cylinders**

6

**Rated power at 2000 rpm**

ISO 14396, gross 469 kW (629 hp)

**Max. torque at 1300 rpm**

301.1 kgf·m

**Idle (low - high)**

700 - 1800 rpm

**Displacement**

18100 cm³

**Bore × stroke**

145 mm × 183 mm

**Starter**

24 V / 9 kW

**Batteries - Alternator**

2 × 12 V, 200 Ah - 24 V, 115 A

**Air filter**

Double element air cleaner with 2-stage filtration

## HYDRAULIC SYSTEM

The e-EPOS (Electronic Power Optimizing System) is the brain of the excavator – minimizing fuel consumption and optimizing the efficiency of the hydraulic system for all working conditions. To harmonize the operation of the engine and the hydraulics, the e-EPOS is connected to the engine's electronic control unit (ECU) via a data transfer link.

- The hydraulic system enables independent or combined operations
- 2 travel speeds offer either increased torque or high speed
- Cross-sensing pump system for fuel savings
- Auto-deceleration system
- 4 work modes and 4 power modes
- Button control of flow in auxiliary equipment circuits
- Computer-aided pump power control

**Main pumps**

3 × variable displacement axial piston pumps
Maximum flow at 1800 rpm 3 × 523 l/min

**Pilot pump**

Gear pump
Maximum flow at 1800 rpm 60 l/min

**Relief valve settings**

| | |
|---|---|
| Implement | 360 bar (367 kgf/cm²) |
| Travel | 368 bar (375 kgf/cm²) |
| Swing | 294 bar (300 kgf/cm²) |
| Pilot | 200 bar (28 kgf/cm²) |

## UNDERCARRIAGE

Extremely robust construction throughout - made of high-quality, durable materials, with all welded structures designed to limit stresses.

- Track rollers lubricated for life
- Idlers and sprockets fitted with floating seals
- Track shoes made of induction-hardened alloy with double grouser
- Heat-treated connecting pins
- Hydraulic track adjuster with shock-absorbing tension mechanism

**Upper rollers (standard shoe)**

3

**Lower rollers**

9

**Number of links & shoes per side**

51

**Overall track length**

6370 mm

## HYDRAULIC CYLINDERS

High-strength steel piston rods and cylinder bodies. Shock-absorbing mechanism fitted in all cylinders for shock-free operation and extended piston life.

| Cylinders | Quantity | Bore × rod diameter × stroke (mm) |
|---|---|---|
| Boom | 2 | 215 × 150 × 1905 |
| Arm | 1 | 240 × 170 × 2020 |
| Bucket | 1 | 210 × 145 × 1530 |

## CAB

The air-conditioning and heating systems are integrated for optimal climate control. An automatically-controlled fan supplies the pressurized and filtered cab air, which is distributed throughout the cab from multiple vents.
The heated air suspension, adjustable operator's seat includes a seat belt. The operator can adjust the ergonomic seat and joystick console separately according to his preferences.

**A-weighted emission sound pressure level at the operator's position, LpAd (ISO 6396:2008)**

72 dB(A)

**A-weighted sound power level, LwAd (2000/14/EC)**

110 dB(A)

## FLUID CAPACITIES

| | |
|---|---|
| Fuel tank | 1100 l |
| Cooling system (radiator) | 105 l |
| Hydraulic oil tank | 880 l |
| Engine oil | 65 l |
| Swing drive | 2 × 8 l |
| Travel device | 2 × 25 l |

## SWING MECHANISM

The swing mechanism uses 2 axial piston motors, driving a 2-stage planetary reduction gear bathed in oil for maximum torque.

- Swing bearings: Unique design of crossed bearings, for better stress distribution, and increased lifetime
- Internal gear and pinion immersed in lubricant

**Maximum swing speed**

6.1 rpm

**Maximum swing torque**

31850 kgf·m

## DRIVE

Each track is driven by an independent, high-torque axial piston motor through a planetary reduction gearbox. Two levers / foot pedals guarantee smooth travel with counter-rotation on demand. The track frame protects the travel motor, brake and planetary gears. The multi-disc track brakes are spring-applied and hydraulic released.

**Travel speed (low - high)**

2.6 - 4.5 km/h

**Maximum traction**

60.6 t

**Maximum gradeability**

70% / 35°

## WEIGHT

| | Shoe width (mm) | Machine weight (t) | Ground pressure (kgf/cm²) |
|---|---|---|---|
| Double grouser | 650 (Std) | 97.0 | 1.37 |
| | 750 | 97.6 | 1.19 |
| | 900 | 99.5 | 1.01 |

## COMPONENT WEIGHTS

| Item | Unit | Weight | Remarks |
|---|---|---|---|
| Upper structure without front | kg | 32870 | With counterweight |
| Lower structure assembly | kg | 14150 | |
| Counterweight | kg | 12700 | |
| Front assembly | kg | 15800 | Based on standard |
| Boom | mm<br>kg | 7250 / 8400<br>10230 / 10740 | Including bushings |
| Arm | mm<br>kg | 2900 / 3700<br>5590 / 5825 | Including bushings |

# TECHNICAL SPECIFICATIONS

## BUCKETS

| Bucket Type | Capacity (m³) SAE | Width (mm) | | Weight (kg) | Digging force (ISO) (STD / OPT) (ton) |
|---|---|---|---|---|---|
| | | With side cutters | W/O side cutters | | |
| S Class | 5.4 | 1940 | 1940 | 5214 | 42.96 / 48.2 |
| | 6.8 | 2320 | 2320 | 5723 | |

## S CLASS (SEVERE DUTY) BUCKET

The S CLASS (SEVERE DUTY) BUCKET is designed for mass excavation in high density severe mining & quarry using high strength and abrasion resistance materials.

**Features & Benefits**

- 2 different sizes are available.
- Diamond folded section for greater structural strength.
- Overlapping plate for protecting lip plate and increasing strength.
- Optimized shape for high penetration and heel clearance.
- Deep profile for high capacity.
- Low tip radius for greater digging performance.
- Optimized design for genuine Develon SD (Severe Duty) tooth for durability and productivity.
- Bolt-on dual side shroud design for more durability and protection in severe applications.
- Wear pads and bottom section.
- High grade material composition for better durability.
- Incredible strength with lip plate using 500HBN.
- Higher abrasion resistance using 400HBN.



High-strength steel

High-abrasion-resistant steel

| Classification | Model name | Width (mm) | Capacity (m³) | Lip plate (mm) |
|---|---|---|---|---|
| DX1000LC-7 | Bucket assy; 5.4 m³ | 1940 | 5.4 | 70 |
| | Bucket assy; 6.8 m³ | 2320 | 6.8 | 70 |

## HYDRAULIC BREAKER

Designed for focusing on breaking jobs. To be faithful to the hydraulic breaker's original function, Develon has optimized impact power and durability, while providing customer convenience and easy maintenance.

**Features & Benefits**

- Concrete proven working principle (Oil and gas assist)
- Anti-blank blow system
- Dual Speed Control
- Competitive component counts
- Heavy-duty main bracket design
- Maximized lifetime of dampers and wear plate
- Centralized lubricating system (option)




| Model name | Operating Weight (kg) | Tool diameter (mm) | Operating pressure (bar) | Flow (l/min) | | Frequency | |
|---|---|---|---|---|---|---|---|
| | | | | Min | Max | High BPM | Low BPM |
| DXB1000 | 10070 | 245 | 165 x 185 | 410 | 530 | 360 - 470 | 360 - 470 |

# LIFTING CAPACITIES

## W/O BUCKET

(UNIT: 1000 KG)

| A | 4.5 m | | 6.0 m | | 7.5 m | | 9.0 m | | 10.5 m | | Max. reach | | |
|---|---|---|---|---|---|---|---|---|---|---|---|---|---|
| B | | | | | | | | | | | | | A |
| **Boom 7.25 m • Arm 2.9 m • Shoe 650 mm • Counterweight 12.76 t** | | | | | | | | | | | | | |
| 10.5 m | | | | | | | | | | | 19.98 * | 19.98 * | 6.40 |
| 9.0 m | | | | | 21.16 * | 21.16 * | | | | | 17.95 * | 17.95 * | 7.90 |
| 7.5 m | | | | | 21.36 * | 21.36 * | | | | | 17.12 * | 17.12 * | 8.91 |
| 6.0 m | | | 26.69 * | 26.69 * | 22.77 * | 22.77 * | 20.63 * | 19.84 | | | 16.94 * | 16.94 * | 9.57 |
| 4.5 m | | | 30.62 * | 30.62 * | 24.73 * | 24.73 * | 21.48 * | 19.26 | | | 17.25 * | 16.35 | 9.96 |
| 3.0 m | | | 34.06 * | 33.81 | 26.63 * | 24.38 | 22.42 * | 18.64 | | | 18.06 * | 15.64 | 10.10 |
| 1.5 m | | | 35.83 * | 32.51 | 27.90 * | 23.51 | 23.05 * | 18.13 | | | 19.47 * | 15.55 | 10.02 |
| 0.0 m | | | 35.76 * | 31.96 | 28.14 * | 23.02 | 22.94 * | 17.83 | | | 20.80 * | 16.12 | 9.70 |
| -1.5 m | 43.15 * | 43.15 * | 34.02 * | 31.92 | 27.04 * | 22.91 | 21.42 * | 17.87 | | | 20.89 * | 17.57 | 9.13 |
| -3.0 m | 37.87 * | 37.87 * | 30.36 * | 30.36 * | 23.91 * | 23.25 | | | | | 20.57 * | 20.57 | 8.23 |
| -4.5 m | 29.38 * | 29.38 * | 23.41 * | 23.41 * | | | | | | | 19.02 * | 19.02 * | 6.89 |
| **Boom 7.25 m • Arm 2.9 m • Shoe 750 mm • Counterweight 12.76 t** | | | | | | | | | | | | | |
| 10.5 m | | | | | | | | | | | 19.98 * | 19.98 * | 6.40 |
| 9.0 m | | | | | 21.16 * | 21.16 * | | | | | 17.95 * | 17.95 * | 7.90 |
| 7.5 m | | | | | 21.36 * | 21.36 * | | | | | 17.12 * | 17.12 * | 8.91 |
| 6.0 m | | | 26.69 * | 26.69 * | 22.77 * | 22.77 * | 20.63 * | 19.96 | | | 16.94 * | 16.94 * | 9.57 |
| 4.5 m | | | 30.62 * | 30.62 * | 24.73 * | 24.73 * | 21.48 * | 19.39 | | | 17.25 * | 16.46 | 9.96 |
| 3.0 m | | | 34.06 * | 34.03 | 26.63 * | 24.54 | 22.42 * | 18.76 | | | 18.06 * | 15.74 | 10.10 |
| 1.5 m | | | 35.83 * | 32.73 | 27.90 * | 23.67 | 23.05 * | 18.25 | | | 19.47 * | 15.65 | 10.02 |
| 0.0 m | | | 35.76 * | 32.17 | 28.14 * | 23.17 | 22.94 * | 17.96 | | | 20.80 * | 16.23 | 9.70 |
| -1.5 m | 43.15 * | 43.15 * | 34.02 * | 32.13 | 27.04 * | 23.07 | 21.42 * | 18 | | | 20.89 * | 17.69 | 9.13 |
| -3.0 m | 37.87 * | 37.87 * | 30.36 * | 30.36 * | 23.91 * | 23.4 | | | | | 20.57 * | 20.57 * | 8.23 |
| -4.5 m | 29.38 * | 29.38 * | 23.41 * | 23.41 * | | | | | | | 19.02 * | 19.02 * | 6.89 |
| **Boom 8.4 m • Arm 3.7 m • Shoe 750 mm • Counterweight 12.76 t** | | | | | | | | | | | | | |
| 10.5 m | | | | | | | 15.25 * | 15.25 * | | | 14.63 * | 14.63 * | 9.06 |
| 9.0 m | | | | | | | 17.95 * | 17.95 * | | | 13.90 * | 13.90 * | 10.17 |
| 7.5 m | | | | | 20.71 * | 20.71 * | 18.47 * | 18.47 * | 17.01 * | 15.53 | 13.63 * | 13.63 * | 10.96 |
| 6.0 m | | | | | 22.52 * | 22.52 * | 19.41 * | 19.41 * | 17.35 * | 15.18 | 13.67 * | 12.87 | 11.50 |
| 4.5 m | | | | | 24.49 * | 24.49 * | 20.48 * | 18.75 | 17.86 * | 14.69 | 14.00 * | 12.00 | 11.83 |
| 3.0 m | | | | | 26.09 * | 23.34 | 21.41 * | 17.91 | 18.30 * | 14.19 | 14.64 * | 11.53 | 11.95 |
| 1.5 m | | | | | 26.88 * | 22.31 | 21.92 * | 17.22 | 18.47 * | 13.76 | 15.63 * | 11.42 | 11.88 |
| 0.0 m | | | | | 26.68 * | 21.71 | 21.80 * | 16.76 | 18.16 * | 13.46 | 15.67 * | 11.67 | 11.62 |
| -1.5 m | | | 31.29 * | 30.12 | 25.46 * | 21.48 | 20.88 * | 16.55 | 17.09 * | 13.36 | 15.37 * | 12.36 | 11.14 |
| -3.0 m | 33.04 * | 33.04 * | 28.04 * | 28.04 * | 23.16 * | 21.56 | 18.91 * | 16.61 | | | 14.81 * | 13.68 | 10.43 |
| -4.5 m | 27.13 * | 27.13 * | 23.42 * | 23.42 * | 19.41 * | 19.41 * | 15.18 * | 15.18 * | | | 13.70 * | 13.70 * | 9.41 |
| -6.0 m | | | 16.64 * | 16.64 * | 13.05 * | 13.05 * | | | | | 11.34 * | 11.34 * | 7.98 |
| **Boom 8.4 m • Arm 3.7 m • Shoe 900 mm • Counterweight 12.76 t** | | | | | | | | | | | | | |
| 10.5 m | | | | | | | 15.25 * | 15.25 * | | | 14.63 * | 14.63 * | 9.06 |
| 9.0 m | | | | | | | 17.95 * | 17.95 * | | | 13.90 * | 13.90 * | 10.17 |
| 7.5 m | | | | | 20.71 * | 20.71 * | 18.47 * | 18.47 * | 17.01 * | 15.73 | 13.63 * | 13.63 * | 10.96 |
| 6.0 m | | | | | 22.52 * | 22.52 * | 19.41 * | 19.41 * | 17.35 * | 15.38 | 13.67 * | 13.05 | 11.50 |
| 4.5 m | | | | | 24.49 * | 24.49 * | 20.48 * | 18.99 | 17.86 * | 14.89 | 14.00 * | 12.17 | 11.83 |
| 3.0 m | | | | | 26.09 * | 23.64 | 21.41 * | 18.15 | 18.30 * | 14.39 | 14.64 * | 11.7 | 11.95 |
| 1.5 m | | | | | 26.88 * | 22.62 | 21.92 * | 17.46 | 18.47 * | 13.96 | 15.63 * | 11.6 | 11.88 |
| 0.0 m | | | | | 26.68 * | 22.01 | 21.80 * | 17.00 | 18.16 * | 13.66 | 15.67 * | 11.85 | 11.62 |
| -1.5 m | | | 31.29 * | 30.53 | 25.46 * | 21.78 | 20.88 * | 16.79 | 17.09 * | 13.56 | 15.37 * | 12.55 | 11.14 |
| -3.0 m | 33.04 * | 33.04 * | 28.04 * | 28.04 * | 23.16 * | 21.87 | 18.91 * | 16.85 | | | 14.81 * | 13.88 | 10.43 |
| -4.5 m | 27.13 * | 27.13 * | 23.42 * | 23.42 * | 19.41 * | 19.41 * | 15.18 * | 15.18 * | | | 13.70 * | 13.70 * | 9.41 |
| -6.0 m | | | 16.64 * | 16.64 * | 13.05 * | 13.05 * | | | | | 11.34 * | 11.34 * | 7.98 |

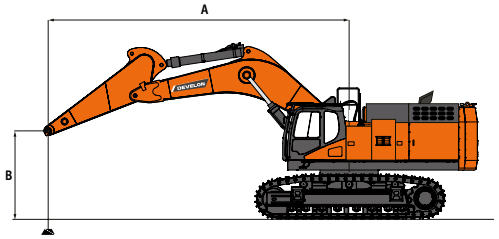


: Rating over front.
: Rating over side or 360°.

1. Lifting capacities are in compliance with ISO 10567:2007(E).
2. The load point is at the end of the arm.
3. * = The nominal loads are based on hydraulic capacity.
4. The nominal loads shown do not exceed 75% of tipping loads or 87% of hydraulic lifting capacity.
5. For lifting capacity with bucket, simply subtract the actual weight of the bucket from the values.
6. The configurations indicated do not necessarily reflect the standard equipment of the machine.

# DIMENSIONS

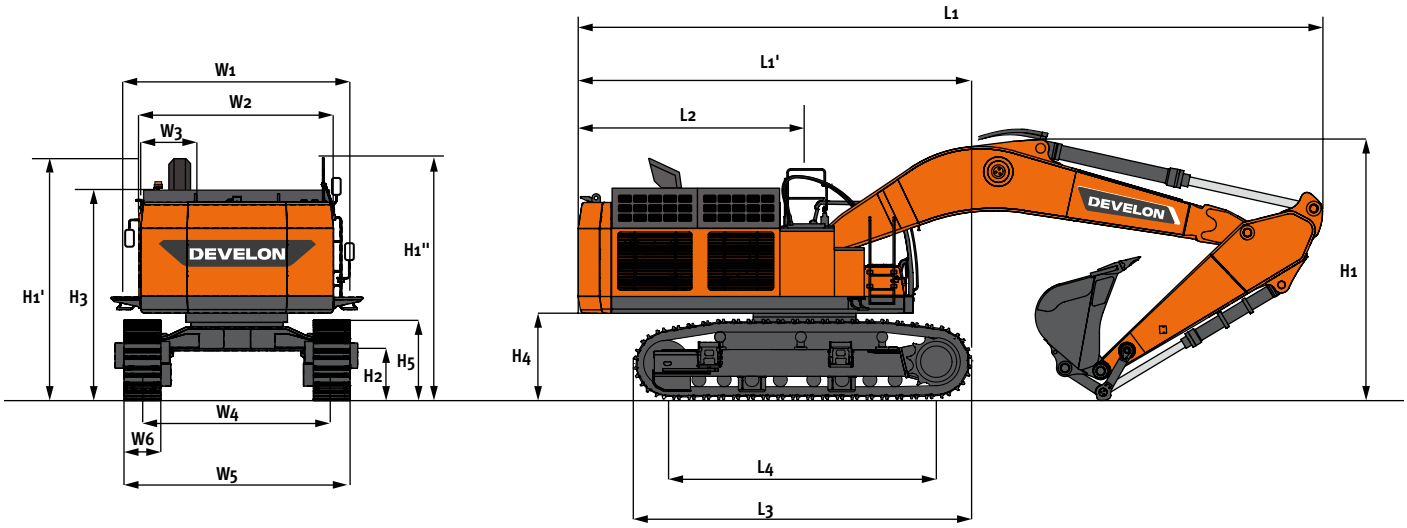


## DIMENSIONS

| | | | Unit | Mono boom | |
|---|---|---|---|---|---|
| **Boom length** | | | **mm** | **7250** | **8400** |
| **Arm length** | | | **mm** | **2900** | **3750** |
| **Bucket capacity (SAE)** | | | **m³** | **6.8** | **5.4** |
| L1 | Overall length | | **mm** | 13800 | 14550 |
| H1 | Overall height | Boom | **mm** | 5090 | 5450 |
| | | Hose | **mm** | 5150 | 5550 |
| | | Cab | **mm** | 3615 | |
| | | Hand/guard rail | **mm** | 4175 | |
| W1 | Overall width (shipping) | | **mm** | 3440 | |
| | Rear swing radius | | **mm** | 4620 | |
| H2 | Ground clearance | | **mm** | *860 | |
| L2 | Rear end distance | | **mm** | 4565 | |
| W2 | House width | | **mm** | ***3410/4450 | |
| W3 | Cab width | | **mm** | 1010 | |
| H3 | Height over hood (bonnet) | | **mm** | 3785 | |
| H4 | Counterweight clearance | | **mm** | *1560/1615 | |
| H5 | Track height | | **mm** | *1350/1405 | |
| L3 | Track length | | **mm** | 6341 | |
| L4 | Tumbler distance | | **mm** | 5100 | |
| W5 | Undercarriage width (without step) | | **mm** | **3440/4200 | |
| | Undercarriage width (with step) | | **mm** | **3732/4492 | |
| W6 | Shoe width | | **mm** | 650 | |
| | Grouser height | | **mm** | 52 | |

*** without grouser**
**** retracted / extended**
***** without / with catwalk**

# WORKING RANGE

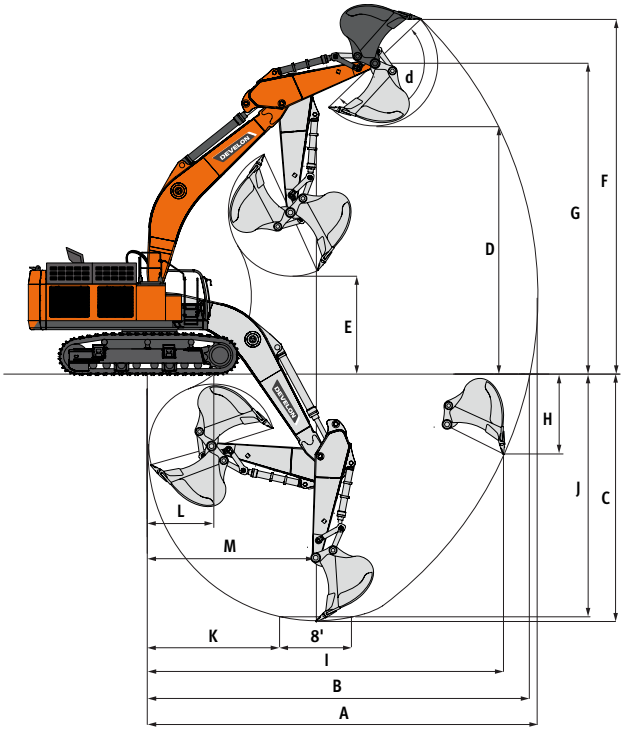


## WORKING RANGE

| | | Unit | Mono boom | |
|---|---|---|---|---|
| **Boom length** | | **mm** | **7250** | **8400** |
| **Arm length** | | **mm** | **2900** | **3750** |
| **Bucket capacity (SAE)** | | **m³** | **6.8** | **5.4** |
| A | Max. digging reach | mm | 12430 | 14275 |
| B | Max. digging reach (ground) | mm | 12110 | 14000 |
| C | Max. digging depth | mm | 7260 | 8795 |
| D | Max. loading height | mm | 8100 | 9440 |
| E | Min. loading height | mm | 3910 | 4210 |
| F | Max. digging height | mm | 12425 | 13840 |
| G | Max. bucket pin height | mm | 10515 | 11862 |
| H | Max. vertical wall depth | mm | 2965 | 4470 |
| I | Max. radius vertical | mm | 10995 | 12265 |
| J | Max. digging depth (8' level) | mm | 7110 | 8665 |
| K | Min. radius (8' level) | mm | 4410 | 5290 |
| L | Min. digging reach | mm | 1970 | 3365 |
| M | Min. swing radius | mm | 5345 | 6295 |
| d | Bucket angle | ° | 145.3 | 143.8 |

## DIGGING FORCES (ISO)

| | Unit | Mono boom | |
|---|---|---|---|
| **Boom length** | **mm** | **7250** | **8400** |
| **Arm length** | **mm** | **2900** | **3750** |
| **Bucket capacity (SAE)** | **m³** | **6.8** | **5.4** |
| BUCKET | ton | 42.96 | 48.2 |
| ARM | ton | 40.8 | 36.73 |

# STANDARD AND OPTIONAL EQUIPMENT

● Standard ○ Optional

## Engine

- ● Perkins 2806J, Stage V compliant, SCR, DOC and DPF post-treatment, water-cooled diesel engine with wastegate turbocharger and air-to-air intercooler

## Hydraulic system

- ● Boom and arm flow regeneration
- ● Boom and arm holding valves
- ● Swing anti-rebound valves
- ● Spare ports (control valve)
- ○ 2-way auxiliary hydraulic line and breaker piping (pedal & joystick controlled)
- ○ Hydraulic piping for rotating tool (Pero)

## Cab & Interior

- ● Pressurized, sound-insulated and CabSus mounted cab
- ● Adjustable air suspension seat with headrest and adjustable armrests
- ● Air conditioner & heater
- ● Pull-up type front window and removable lower front window
- ● Intermittent windshield wiper
- ● Rain shield
- ● Sun visor
- ● Sun roof
- ● Joystick lever with 3 switches
- ● DEVELON Smart Touch – 8" touch screen, all-in-one
- ● 2 operating modes & 2 working modes
- ● Electric horn
- ● Ceiling light
- ● Cup holder
- ● Multiple storage compartments (e.g. document holder under seat)
- ● Storage area (tools, etc.)
- ● Heating and cooling lunch box
- ● Flat, spacious, easy-to-clean floor
- ● Keyless start (Develon Smart Key) & remote door lock/unlock
- ● E/G RPM control dial
- ● 12 V spare power socket
- ● Serial communication port for laptop PC interface
- ● Remote radio ON/OFF switch
- ● Radio + MP3 (Stereo) with Bluetooth streaming
- ○ Lower wiper

## Safety

- ● Large handrails and steps
- ● Convex metal anti-slip plates
- ● Seat belt
- ● Hydraulic safety lock lever
- ● Safety glass
- ● Hammer for emergency escape
- ● Right and left rear-view mirrors
- ● Side mirror
- ● Battery protector cover
- ● Engine overheat prevention system
- ● Engine restart prevention system
- ● Rotating beacon
- ● Overload warning device
- ● Full LED lights pack: 5 lamps on the superstructure, 2 on the boom, 6 on the cabin
- ● 360° all-around view camera (AVM)
- ○ FOGS cab - top guard (ISO 10262)
- ○ Front window upper and lower guards

## Other

- ● 7250 mm boom – 2900 mm arm – 12760 kg counterweight
- ● DEVELON Fleet Management Web (telematic system)
- ● Double element air cleaner with 2-stage filtration
- ● Water separator
- ● Fuel filter
- ● Dust screen for radiator/oil cooler
- ● Hydraulic oil tank air breather filter
- ● Self-diagnostic function
- ● Alternator (24 V, 115 A) - Battery (2 × 12 V, 200 Ah)
- ● Automatic lubrication system
- ● Alarm for travel & swing
- ● Fuel filler pump
- ● Additional mirror
- ○ 8400 mm boom
- ○ 3750 mm arm
- ○ Develon buckets: full range of GP, HD & rock buckets
- ○ Hydraulic piping for quick-coupler
- ○ Additional filter for breaker piping
- ○ Double pump flow
- ○ Straight travel pedal
- ○ Air compressor

## Undercarriage

- ● Hydraulic track adjuster
- ● Track guards
- ● Greased and sealed track links
- ● 650 mm double grouser shoe
- ○ 750 mm and 900 mm double grouser shoe

Powered by **Innovation**

**DISCOVER MORE:**
**DX1000LC-7**

DEVELON

DOOSAN Infracore Europe s.r.o.
IBC - Pobřežní 620/3, 186 00 Praha 8-Karlín
Czech Republic

©2023 DEVELON D4601061-EN (05-23)

Certain specification(s) are based on engineering calculations and are not actual measurements. Specification(s) are provided for comparison purposes only and are subject to change without notice.
Specification(s) for your individual Develon equipment will vary based on normal variations in design, manufacturing, operating conditions, and other factors. Pictures of Develon units may show other than standard equipment.