DEVELON

Compact Wheel Loaders

DL60-7/DL65-7
DL80-7/DL85-7
DL80TL-7



	DL60-7	DL65-7	DL80-7	DL85-7	DL80TL-7
Maximum power	66 hp	66 hp	75 hp	75 hp	75 hp
Operating weight	3.75 t	3.65 t	5.2 t	5.1 t	5.2 t



Meet our new range of compact wheel loaders ranging from 3.5 ton up to 5.0 ton classes.

COMPACT, VERSATILE AND POWERFUL

Just like the heavier versions, the Develon Compact Wheel Loaders set the industry standard for productivity, flexibility, comfort, safety and reliability.

FULL PACKAGE OF MODERN TECHNOLOGY INSIDE:

Powerful Stage V engine
Hydrostatic 4-wheel drive
100% differential lock on both axles
Versatile and powerful hydraulics





OUTSTANDING PRODUCTIVITY

Equipped with a Stage V compliant engine and powerful hydraulics, Develon's compact wheel loaders feature high lifting capacity combined with stability. Do more, get better results, and grow your business.

POWER & PRODUCTIVITY

STAGE V ENGINE

The machines are powered by an engine compliant with the latest emission regulations – Stage V. High-pressure fuel injection and precise timing provide highly efficient fuel burn and perfect combustion. The aftertreatment system is composed of an oxidation catalyst and long-life particulate filter to reduce emissions without requiring an SCR (Selective catalytic reduction).

PRECISE, RESPONSIVE & SMOOTH DRIVING

The electronically controlled driving ensures extremely high driving comfort and precision and increases the machine's thrust. In addition, various travel modes are available.

HYDROSTATIC TRANSMISSION (HST)

Hydrostatic Transmission (HST) boosts acceleration performance and delivers smooth, shock-free operation in all situations. Initial use of brake pedal provides inching function, which brakes the machine completely hydraulically. This saves fuel and provides faster hydraulic movement.

HAND THROTTLE

The hand-throttle sets the (minimum) engine RPM. This optional function provides constant hydraulic power (AUX line) to be used by the connected hydraulic attachment (hydraulic motor).

100% DIFFERENTIAL LOCK ON BOTH AXLES

Our compact wheel loaders feature a 100% differential lock on both axles and a transmission that is both smooth and responsive. Thanks to superior traction, these machines guarantee a firm grip while generating plenty of pulling force.

INCHING PEDAL

Initial use of brake pedal provides inching function, which brakes the machine completely hydraulically. This saves fuel, reduces axle temperature and provides more power for working hydraulics.

No pressure on inch-brake pedal:
Full power for the drive system (driving hydraulics)



Light pressure on inch-brake pedal:
Travel speed is reduced, more engine power for the working hydraulics



Fully pressed inch-brake pedal:
The machine stands still, full engine power for the working hydraulics



Engine power
Driving hydraulics
Working hydraulics




6
9
10
2
1
3
8
11
5



1. All-in-one joystick
2. Gauge panel
3. Adjustable steering column
4. Hand-throttle
5. Air suspended seat with safety belt
6. DAB Radio
7. Heater and A/C
8. Drink holder
9. Sunblind
10. Interior mirror
11. Inching pedal

COMFORT & SAFETY

CAB WITH ALL-DAY COMFORT

Focus on the job at hand thanks to numerous quality-of-life features such as a premium, air-suspended seat as standard, radio or powerful LED lights. Additionally, air conditioning is an option on all the models.

3 VERSIONS OF CAB – MAKE THE RIGHT CHOICE FOR YOUR NEEDS WITH ROPS/FOPS CERTIFICATION

All models are equipped with a safety roof as standard. For higher comfort, a safety roof deluxe or a fully closed cab are available. The use of narrow styles and skylight gives the operator all-round visibility and an excellent view on his work to allow safe and precise operation.

ALL-IN-ONE JOYSTICK

Essential controls are always at your fingertips. Change driving direction and speed modes or adjust differential lock with ease. Full control over the hydraulics and a spool valve memory function help increase efficiency and control even more.

STABILITY AND MANOEUVRABILITY

The articulated pendulum joint provides a lot of stability and maneuverability. The system ensures that all 4 wheels remain on the ground, even when working on uneven terrain. This not only allows you to work safely, but there is always sufficient traction. For extra productivity, it is possible to equip the DL80-7/DL85-7/DL80TL-7 with the patented Stabilo System. This system provides extra safety and comfort, because unevennesses are absorbed without any compromise to performance.





TRULY MULTIPURPOSE

Need to use more than the bucket for a specialized job? Choose from a wide range of compatible work tools and a powerful High Flow option for up to 121 liters/minute.

VERSATILITY & COMPACTNESS

FULL FLEXIBILITY AND MAXIMUM TRACTION

Develon machines are designed to operate in tight spaces and in rough conditions. The optimal weight distribution and the compact dimensions ensure this. The articulated pendulum joint gives the machines a small turning radius and makes them extremely maneuverable. The system ensures that all 4 wheels are on the ground, even on rough terrain. This allows you to work safer, faster and always with enough traction.

TRULY VERSATILE

Our compact wheel loaders are designed for a wide range of jobs. From warehouse to recycling, construction, agriculture, landscaping or road maintenance, our selection of attachments lets you tackle any challenges and grow your business.

DO IT YOUR WAY

No matter the application, we have you covered. Personalize your machine with 3 types of kinematics to suit your preferences:

- Z-bar arm to ensure high breakout force and excellent loading heights.
- Pull-bar arm to benefit from lower front frame - excellent in extremely heavy work.
- Telescopic arm to provide maximal lifting height and reach.

VERSATILE AND POWERFUL HYDRAULICS

Thanks to an optional tandem pump, a double-acting spool valve in the rear, and up to 3 double-acting spool valves on the lift arm, you always have enough hydraulic power at your fingertips for even the most demanding attachments and applications. A High Flow option is also available for the DL80, DL85 and DL80TL models.

HYDRAULIC QUICK COUPLER

The Develon models are equipped with a hydraulic quick coupler as standard. This makes it possible to change attachments safely and within seconds.



RAISE PROFITS, PRODUCTIVITY & FUEL EFFICIENCY



DL60-7



POWER WITH LOW FUEL CONSUMPTION

The machines are driven by a powerful, 66 hp engine that is equipped with a catalytic converter (DOC) and a diesel particulate filter (DPF) and that meets the latest, EU Stage V, clean engine standards.

COMFORT AND SAFETY

A comfortable safe working environment has been created in the ROPS/FOPS certified cab - so you will enjoy long working days. The steering column is fully adjustable and all necessary information can easily be read from a gauge panel.

MAXIMUM PERFORMANCE IN ALL CONDITIONS

A wide selection of tires ensures you will always get maximum performance in your application. Adjustable mudguards provide the proper coverage to keep your machine clean and safe.

PRODUCTIVITY AND TRACTION

The hydrostatic 4-wheel drive, with automotive control (Rexroth) and 100% switchable differential lock on both 14-ton axles, always provides enough traction, a lot of pulling force and smooth movement.

TAILOR THE MACHINE FOR YOUR WORK

Develon compact wheel loaders can be configured completely according to your needs. Depending on your job, you choose a Z-bar or P-bar version.



DL65-7

RAISE PROFITS, PRODUCTIVITY & FUEL EFFICIENCY

POWER WITH LOW FUEL CONSUMPTION

The machines are driven by a powerful, 75 hp engine that is equipped with a catalytic converter (DOC) and diesel particle filter (DPF) and that meets the latest, EU Stage V, clean engine standards.

COMFORT AND SAFETY

A comfortable safe working environment has been created in the ROPS/FOPS certified cab - so you will enjoy long working days. The steering column is fully adjustable and all necessary information can easily be read from a gauge panel.

MAXIMUM PERFORMANCE IN ALL CONDITIONS

A wide selection of tires ensures you will always get maximum performance in your application. Adjustable mudguards provide the proper coverage to keep your machine clean and safe.

PRODUCTIVITY AND TRACTION

The hydrostatic 4-wheel drive, with automotive control (Rexroth) and 100% switchable differential lock on both 16-ton axles, always provides enough traction, a lot of pulling force and smooth movement.

TAILOR THE MACHINE FOR YOUR WORK

No matter the application, we have you covered. Personalize your machine with 3 types of kinematics to suit your preferences: choose the Z-Bar for the highest lifting height, the Pull-bar for highest lifting capacity or Telescopic for extended reach.

HYDRAULIC POWER

The wide range of additional hydraulic connections match with your work tools. Most jobs demanding hydraulics are equipped with the High-Flow connection - up to 121 l/min.



DL80-7



DL80TL-7



DL85-7

TECHNICAL SPECIFICATIONS DL60-7 & DL65-7

ENGINE

Model
Kubota V2403

No. of cylinders
4

Max. power
48.5 kW/66 hp

Max. torque
198 N·m @ 1600 rpm

Displacement
2430 cm³

Radiator
Wide fin radiator

TRANSMISSION AND AXLES

Type
Hydrostatic (HST)

Travel speed
30 km/h

Axles
14-ton axles with heavy planetary end drive

Differential lock
100% electrical differential lock on both axles

Brakes
Drum brakes

Driving hydraulic
112 l/min (450 bar)

HYDRAULIC SYSTEM

Type
Gear pump

Working hydraulic
75 l/min (220 bar)

FLUID CAPACITIES

	DL60-7	DL65-7
Fuel tank	68 l	49 l
Cooling system	11 l	
Engine oil	9.5 l	
Front axle	6.5 l	
Rear axle	6.5 l	
Transmission oil	0.5 l	
Hydraulic tank	63 l	

LIFT ARM

	DL60-7	DL65-7
Type	Z-bar	P-bar
Quick coupler	Hydraulic locking	

PERFORMANCE DATA & DIMENSIONS

		Unit	DL60-7	DL65-7
	Steering angle	°	40	40
A	Wheelbase	mm	1830	1830
B	Total length – w/o attachment	mm	3752	3752
C	Length with bucket	mm	4572	4572
D	Max. height with cab	mm	2325	2325
E	Max. height with safety roof	mm	2325	2325
G	Max. dumping height	mm	2450	1800
H	Height at bucket pivot point	mm	3290	2670
J	Rollback angle on the ground	°	41	41
K	Rollback angle at max. lift height	°	57	57
L	Max. angle for bucket emptying	°	43	43
	Width on standard tires	mm	1340	1340
	Turning radius with bucket	mm	3425	3425
	Turning radius over the tires	mm	2970	2970

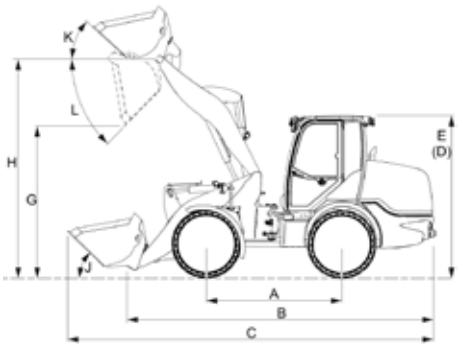

STANDARD AND OPTIONAL EQUIPMENT

Engine & powertrain
- ● Air pre-cleaner (centrifugal)
- ● Wide fin radiator
- ● HST – 30 km/h
- ● 2 drive ranges (Turtle/Hare)
- ● 100 % electrical differential lock on both axles
- ● Inching pedal
- ○ Hand throttle
- ○ Engine preheater (220V)

Cab & operator comfort
- ● ROPS/FOPS safety roof
- ● Luxury air suspended seat with safety belt, armrest and extended backrest
- ● Multifunctional joystick
- ○ ROPS/FOPS safety roof deluxe
- ○ ROPS/FOPS cab
- ○ Heating
- ○ Air conditioned
- ○ Rear view mirrors

Hydraulics
- ● Gear pump 75 l/min (220 bar)
- ● AUX – double acting function on lift arm
- ○ Electrically switchable tandem pump 65 l/min
- ○ AUX – additional double acting function on lift arm
- ○ Free hydraulic return
- ○ AUX – additional double acting function – rear
- ○ Free hydraulic return – rear

Lift arm
- ● DL60-7: Z-bar kinematic
- ● DL65-7: P-bar kinematic
- ● Boom floating
- ○ Boom suspension

Work tools
- ● Quick coupler
- ○ Different quick couplers (Euro, SMS, Euro/SMS, and others)

Lights
- ● Working light on lift arm
- ○ Traffic light
- ○ Working light – front
- ○ Working light – rear
- ○ Beacon

Electricity
- ● Battery master switch
- ○ 12 V socket – 3 pin (on lift arm, in cab, on rear)
- ○ Back-up alarm (acoustic)

TIPPING LOAD - STRAIGHT

Machine position	Payload position	DL60-7	DL65-7
Straight	S	2875 kg	3260 kg
	T	2700 kg	3020 kg
	U	2160 kg	2325 kg
Full turn	S	2455 kg	2780 kg
	T	2300 kg	2575 kg
	U	1840 kg	1985 kg

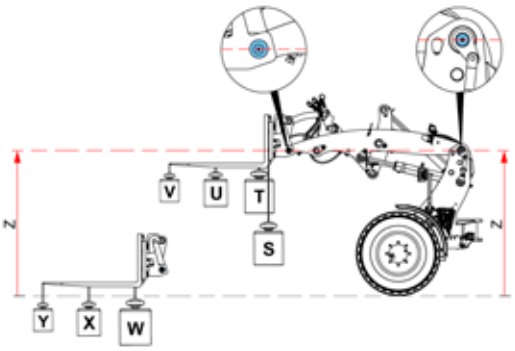





TECHNICAL SPECIFICATIONS DL80-7, DL85-7 & DL80TL-7

ENGINE

Model
Kubota V3307

No. of cylinders
4

Max. power
55 kW/75 hp

Max. torque
265 N·m @ 1500 rpm

Displacement
3330 cm³

Radiator
Wide fin radiator

TRANSMISSION AND AXLES

Type
Hydrostatic (HST)

Travel speed
20 km/h (35 km/h optional)

Axles
16-ton axles with heavy planetary end drive

Differential lock
100% electrical differential lock on both axles

Brakes
Hydraulic multidisc brake SAHR

Driving hydraulic
145 l/min (450 bar)

HYDRAULIC SYSTEM

Type
Gear pump

Working hydraulic
80 l/min (250 bar)

FLUID CAPACITIES

Fuel tank	80 l
Cooling system	12 l
Engine oil	11.2 l
Front axle	7.25 l
Rear axle	7.25 l
Transmission oil	1 l (2-gears: 1.5 l)
Hydraulic tank	70 l

LIFT ARM

	DL80-7	DL85-7	DL80TL-7
Type	Z-bar	P-bar	Telescopic
Quick coupler	Hydraulic locking		

PERFORMANCE DATA & DIMENSIONS

		Unit	DL80-7	DL85-7	DL80TL-7
	Steering angle	°	40	40	40
A	Wheelbase	mm	2044	2044	2044
B	Total length – w/o attachment	mm	4165	4162	4554
C	Length with bucket	mm	5002	4993	5310
D	Max. height with cab	mm	2553	2553	2553
E	Max. height with safety roof	mm	2523	2523	2523
G	Max. dumping height	mm	2551	1919	3400
H	Height at bucket pivot point	mm	3500	2850	4350
J	Rollback angle on the ground	°	45	45	41
K	Rollback angle at max. lift height	°	54	43	-
L	Max. angle for bucket emptying	°	46	46	41
	Width on standard tires	mm	1460	1460	1460
	Turning radius with bucket	mm	3589	3589	3738
	Turning radius over the tires	mm	3190	3190	3190

DL80-7 & DL85-7

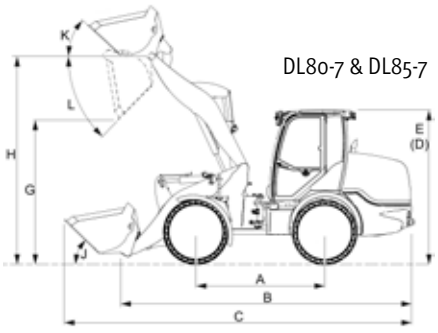

DL80TL-7

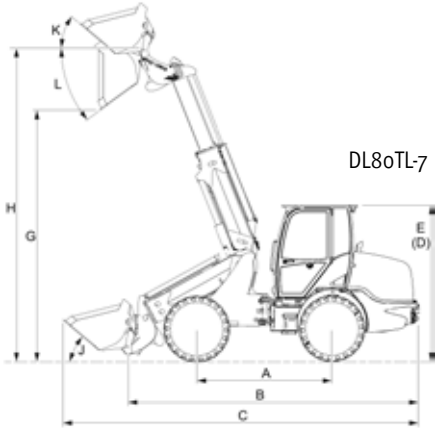

STANDARD AND OPTIONAL EQUIPMENT

Engine & powertrain

- ● Air pre-cleaner (centrifugal)
- ● Wide fin radiator
- ● HST – 20 km/h
- ● 2 drive ranges (Turtle/Hare)
- ● 100 % electrical differential lock on both axles
- ● Inching pedal
- ○ HST – 35 km/h
- ○ Hand throttle
- ○ Engine preheater (220V)

Cab & operator comfort

- ● ROPS/FOPS safety roof
- ● Luxury air suspended seat with safety belt, armrest and extended backrest
- ● Multifunctional joystick
- ○ ROPS/FOPS safety roof deluxe
- ○ ROPS/FOPS cab
- ○ Heating
- ○ Air conditioned
- ○ Rear view mirrors

Hydraulics

- ● Gear pump 80 l/min (250 bar)
- ● AUX – double acting function on lift arm – on arm
- ○ Electrically switchable tandem pump 43 l/min
- ○ Electrically switchable tandem pump High Flow 121 l/min
- ○ AUX – additional double acting function on lift arm
- ○ Free hydraulic return – on arm
- ○ AUX – additional double acting function – rear
- ○ Free hydraulic return – rear

Lift arm

- ● DL80-7: Z-bar kinematic
- ● DL85-7: P-bar kinematic
- ● DL80TL-7: Telescopic arm
- ● Boom floating
- ○ Boom suspension

Work tools

- ● Quick coupler
- ○ Different quick couplers (Euro, SMS, Euro/SMS, and others)

Lights

- ● Working light on lift arm
- ○ Traffic light
- ○ Working light – front
- ○ Working light – rear
- ○ Beacon

Electricity

- ● Battery master switch
- ○ 12 V socket – 3 pin (on lift arm, in cab, on rear)
- ○ Back-up alarm (acoustic)

TIPPING LOAD - STRAIGHT

Machine position	Payload position	DL80-7	DL85-7	DL80TL-7
Straight	S	3920 kg	4375 kg	See in chart below
	T	3680 kg	4080 kg	
	U	2965 kg	3220 kg	
Full turn	S	3280 kg	3715 kg	
	T	3080 kg	3465 kg	
	U	2480 kg	2735 kg	

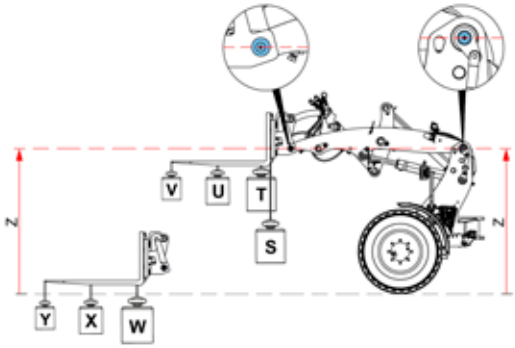

Tipping load - straight DL80TL-7

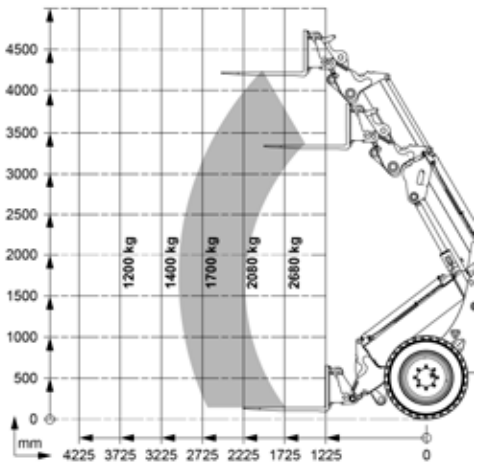







ATTACHMENTS

THE RIGHT ATTACHMENT FOR EVERY APPLICATION!

From warehouse to recycling, construction, agriculture, landscaping or road maintenance, our selection of attachments lets you tackle any challenges and improve your efficiency.



4 in 1 bucket



Clamp



Earth bucket



Levelling bucket



Levelling frame



Light material bucket



Manure forks



Pallet forks



Grapple bucket



Push brooms



Snow blade



Stone bucket

















STANDARD AND OPTIONAL TIRES

● Standard ○ Optional

	11.5/80-15.3 AS	15.0/55x17 AS	405/70 R18 EM01	445/45-R19.5 GSP	445/45-R19.5 Kargo	480/45x17 AS	500/45-20 AS	500/45R22.5 GSP	500/50R17 Ridemax
DL60	●	○	-	○	○	○	○	-	○
DL65	●	○	-	○	○	○	○	-	○
DL80	●	-	○	○	○	-	○	○	-
DL85	●	-	○	○	○	-	○	○	-
DL80TL	●	-	○	○	○	-	○	○	-



GSP



AS



Kargo



AS



EM



ATTACHMENTS DL60-7 AND DL65-7

DL60-7 and DL65-7

- Pallet forks attachment, class 2A, length 1000 mm
- Pallet forks attachment, class 2A, length 1200 mm
- Load backrest
- Hydraulic tine on auxiliary for forks attachment
- General purpose bucket, 0.44 m^3, width 1.50 m, no ground engaging tools
- General purpose bucket, 0.58 m^3, width 1.60 m, no ground engaging tools
- General purpose bucket, 0.64 m^3, width 1.75 m, no ground engaging tools
- General purpose bucket, 0.44 m^3, width 1.50 m, with 6 bolt-on teeth
- General purpose bucket, 0.58 m^3, width 1.60 m, with 6 bolt-on teeth
- General purpose bucket, 0.64 m^3, width 1.75 m, with 7 bolt-on teeth
- 4-in-1 bucket, 0.37 m^3, width 1.50 m, no ground engaging tools
- 4-in-1 bucket, 0.40 m^3, width 1.60 m, no ground engaging tools
- 4-in-1 bucket, 0.44 m^3, width 1.75 m, no ground engaging tools
- 4-in-1 bucket, 0.37 m^3, width 1.50 m, with 6 bolt-on teeth
- 4-in-1 bucket, 0.40 m^3, width 1.60 m, with 6 bolt-on teeth
- 4-in-1 bucket, 0.44 m^3, width 1.75 m, with 7 bolt-on teeth
- Road homologation protection, adjustable width 1100 to 1750 mm
- Skeleton bucket, 0.57 m^3, width 1.50 m, inner plate 3/4 of bucket height, with side walls
- Skeleton bucket, 0.61 m^3, width 1.60 m, inner plate 3/4 of bucket height, with side walls
- Skeleton bucket, 0.67 m^3, width 1.75 m, inner plate 3/4 of bucket height, with side walls
- Light material bucket, 0.86 m^3, width 1.50 m
- Light material bucket, 0.92 m^3, width 1.60 m
- Light material bucket, 1.00 m^3, width 1.75 m
- Light material bucket, 1.15 m^3, width 2.00 m
- Manure fork with grapple, 1.50 m
- Manure fork with grapple, 1.60 m
- Manure fork with grapple, 1.75 m
- Bucket with grapple, 0.43 m^3, width 1.50 m
- Bucket with grapple, 0.46 m^3, width 1.60 m
- Bucket with grapple, 0.51 m^3, width 1.75 m
- High dump bucket, 0.80 m^3, width 1.50 m
- High dump bucket, 0.86 m^3, width 1.60 m
- High dump bucket, 0.94 m^3, width 1.75 m
- Square bale clamp, for bales 700 to 2100 mm wide
- Round bale clamp, for bales diameter 1000 to 1500 mm
- Levelling bucket, 0.61 m^3, width 1.50 m
- Levelling bucket, 0.65 m^3, width 1.60 m
- Levelling bucket, 0.72 m^3, width 1.75 m
- Kit sidewalls for levelling buckets
- Levelling frame, width 1.50 m
- Levelling frame, width 1.75 m
- Levelling frame, width 2.00 m
- Snow blade, width 1.80 m
- Snow blade, width 2.00 m
- Kit hydraulic angle adjustment for snow blades
- Push broom, 1.50 m, requires the quick coupler bracket for push broom
- Push broom, 1.90 m, requires the quick coupler bracket for push broom
- Push broom, 2.30 m, requires the quick coupler bracket for push broom
- L30 quick coupler bracket for push broom

ATTACHMENTS DL80-7

DL80-7

- Pallet forks attachment, class 3A, length 1000 mm
- Pallet forks attachment, class 3A, length 1200 mm
- Load backrest
- Hydraulic tine on auxiliary for forks attachment
- general purpose bucket, 0.73 m^3, width 1.70 m, no ground engaging tools, with spillguard
- general purpose bucket, 0.77 m^3, width 1.80 m, no ground engaging tools, with spillguard
- general purpose bucket, 1.01 m^3, width 1.75 m, no ground engaging tools, with spillguard
- general purpose bucket, 0.81 m^3, width 1.90 m, no ground engaging tools, with spillguard
- general purpose bucket, 0.85 m^3, width 2.00 m, no ground engaging tools, with spillguard
- general purpose bucket, 1.20 m^3, width 2.00 m, no ground engaging tools, with spillguard
- general purpose bucket, 0.90 m^3, width 2.10 m, no ground engaging tools, with spillguard
- general purpose bucket, 0.73 m^3, width 1.70 m, with 6 bolt-on teeth, with spillguard
- general purpose bucket, 0.77 m^3, width 1.80 m, with 7 bolt-on teeth, with spillguard
- general purpose bucket, 1.01 m^3, width 1.75 m, with 7 bolt-on teeth, with spillguard
- general purpose bucket, 0.81 m^3, width 1.90 m, with 7 bolt-on teeth, with spillguard
- general purpose bucket, 0.85 m^3, width 2.00 m, with 7 bolt-on teeth, with spillguard
- general purpose bucket, 1.20 m^3, width 2.00 m, with 7 bolt-on teeth, with spillguard
- general purpose bucket, 0.90 m^3, width 2.10 m, with 8 bolt-on teeth, with spillguard
- 4-in-1 bucket, 0.68 m^3, width 1.70 m, no ground engaging tools
- 4-in-1 bucket, 0.72 m^3, width 1.80 m, no ground engaging tools
- 4-in-1 bucket, 0.76 m^3, width 1.90 m, no ground engaging tools
- 4-in-1 bucket, 0.81 m^3, width 2.00 m, no ground engaging tools
- 4-in-1 bucket, 0.68 m^3, width 1.70 m, with 6 bolt-on teeth
- 4-in-1 bucket, 0.72 m^3, width 1.80 m, with 7 bolt-on teeth
- 4-in-1 bucket, 0.76 m^3, width 1.90 m, with 7 bolt-on teeth
- 4-in-1 bucket, 0.81 m^3, width 2.00 m, with 7 bolt-on teeth
- Road homologation protection, adjustable width 1100 to 1750 mm
- Skeleton bucket, 0.78 m^3, width 1.70 m, inner plate 1/2 of bucket height, without side walls, with spillguard
- Skeleton bucket, 0.82 m^3, width 1.80 m, inner plate 1/2 of bucket height, without side walls, with spillguard
- Skeleton bucket, 0.87 m^3, width 1.90 m, inner plate 1/2 of bucket height, without side walls, with spillguard
- Skeleton bucket, 0.92 m^3, width 2.00 m, inner plate 1/2 of bucket height, without side walls, with spillguard
- Skeleton bucket, 0.97 m^3, width 2.10 m, inner plate 1/2 of bucket height, without side walls, with spillguard
- Skeleton bucket, 1.01 m^3, width 2.20 m, inner plate 1/2 of bucket height, without side walls, with spillguard
- Light material bucket, 1.55 m^3, width 2.00 m
- Light material bucket, 1.54 m^3, width 1.70 m
- Light material bucket, 1.59 m^3, width 1.75 m
- Light material bucket, 1.63 m^3, width 1.80 m
- Light material bucket, 1.73 m^3, width 1.90 m
- Light material bucket, 1.81 m^3, width 2.00 m
- Light material bucket, 1.92 m^3, width 2.10 m
- Light material bucket, 2.02 m^3, width 2.20 m
- Manure fork with grapple, 1.60 m
- Manure fork with grapple, 1.70 m
- Manure fork with grapple, 1.80 m
- Manure fork with grapple, 1.90 m
- Manure fork with grapple, 2.00 m
- Manure fork with grapple, 2.10 m
- Bucket with grapple, 0.63 m^3, width 1.70 m
- Bucket with grapple, 0.67 m^3, width 1.80 m
- Bucket with grapple, 0.71 m^3, width 1.90 m
- Bucket with grapple, 0.75 m^3, width 2.00 m
- Bucket with grapple, 0.79 m^3, width 2.10 m
- Bucket with grapple, 0.83 m^3, width 2.20 m
- High dump bucket, 1.10 m^3, width 1.70 m
- High dump bucket, 1.16 m^3, width 1.80 m
- High dump bucket, 1.23 m^3, width 1.90 m
- High dump bucket, 1.30 m^3, width 2.00 m
- High dump bucket, 1.37 m^3, width 2.10 m
- High dump bucket, 1.44 m^3, width 2.20 m
- Square bale clamp, for bales 700 to 2100 mm wide
- Round bale clamp, for bales diameter 1000 to 1500 mm
- Levelling frame, width 1.75 m
- Levelling frame, width 2.00 m
- Levelling frame, width 2.50 m
- Snow blade, width 2.00 m, with hydraulic angle adjustment
- Snow blade, width 2.25 m, with hydraulic angle adjustment
- Snow blade, width 2.50 m, with hydraulic angle adjustment
- Push broom, 1.50 m, requires the quick coupler bracket for push broom
- Push broom, 1.90 m, requires the quick coupler bracket for push broom
- Push broom, 2.30 m, requires the quick coupler bracket for push broom
- L30 quick coupler bracket for push broom

ATTACHMENTS DL80TL-7

DL80TL-7

- Pallet forks attachment, class 3A, length 1000 mm
- Pallet forks attachment, class 3A, length 1200 mm
- Load backrest
- Hydraulic tine on auxiliary for forks attachment
- General purpose bucket, 0.73 m^3, width 1.70 m, no ground engaging tools, with spillguard
- General purpose bucket, 0.77 m^3, width 1.80 m, no ground engaging tools, with spillguard
- General purpose bucket, 1.01 m^3, width 1.75 m, no ground engaging tools, with spillguard
- General purpose bucket, 0.81 m^3, width 1.90 m, no ground engaging tools, with spillguard
- General purpose bucket, 0.85 m^3, width 2.00 m, no ground engaging tools, with spillguard
- General purpose bucket, 0.90 m^3, width 2.10 m, no ground engaging tools, with spillguard
- General purpose bucket, 0.73 m^3, width 1.70 m, with 6 bolt-on teeth, with spillguard
- General purpose bucket, 0.77 m^3, width 1.80 m, with 7 bolt-on teeth, with spillguard
- General purpose bucket, 1.01 m^3, width 1.75 m, with 7 bolt-on teeth, with spillguard
- General purpose bucket, 0.81 m^3, width 1.90 m, with 7 bolt-on teeth, with spillguard
- General purpose bucket, 0.85 m^3, width 2.00 m, with 7 bolt-on teeth, with spillguard
- General purpose bucket, 0.90 m^3, width 2.10 m, with 8 bolt-on teeth, with spillguard
- 4-in-1 bucket, 0.68 m^3, width 1.70 m, no ground engaging tools
- 4-in-1 bucket, 0.72 m^3, width 1.80 m, no ground engaging tools
- 4-in-1 bucket, 0.76 m^3, width 1.90 m, no ground engaging tools
- 4-in-1 bucket, 0.81 m^3, width 2.00 m, no ground engaging tools
- 4-in-1 bucket, 0.68 m^3, width 1.70 m, with 6 bolt-on teeth
- 4-in-1 bucket, 0.72 m^3, width 1.80 m, with 7 bolt-on teeth
- 4-in-1 bucket, 0.76 m^3, width 1.90 m, with 7 bolt-on teeth
- 4-in-1 bucket, 0.81 m^3, width 2.00 m, with 7 bolt-on teeth
- Road homologation protection, adjustable width 1100 to 1750 mm
- Skeleton bucket, 0.78 m^3, width 1.70 m, inner plate 1/2 of bucket height, without side walls, with spillguard
- Skeleton bucket, 0.82 m^3, width 1.80 m, inner plate 1/2 of bucket height, without side walls, with spillguard
- Skeleton bucket, 0.87 m^3, width 1.90 m, inner plate 1/2 of bucket height, without side walls, with spillguard
- Skeleton bucket, 0.92 m^3, width 2.00 m, inner plate 1/2 of bucket height, without side walls, with spillguard
- Skeleton bucket, 0.97 m^3, width 2.10 m, inner plate 1/2 of bucket height, without side walls, with spillguard
- Skeleton bucket, 1.01 m^3, width 2.20 m, inner plate 1/2 of bucket height, without side walls, with spillguard
- Light material bucket, 1.55 m^3, width 2.00 m
- Light material bucket, 1.54 m^3, width 1.70 m
- Light material bucket, 1.59 m^3, width 1.75 m
- Light material bucket, 1.63 m^3, width 1.80 m
- Light material bucket, 1.73 m^3, width 1.90 m
- Light material bucket, 1.81 m^3, width 2.00 m
- Light material bucket, 1.92 m^3, width 2.10 m
- Light material bucket, 2.02 m^3, width 2.20 m
- Manure fork with grapple, 1.60 m
- Manure fork with grapple, 1.70 m
- Manure fork with grapple, 1.80 m
- Manure fork with grapple, 1.90 m
- Manure fork with grapple, 2.00 m
- Manure fork with grapple, 2.10 m
- Bucket with grapple, 0.63 m^3, width 1.70 m
- Bucket with grapple, 0.67 m^3, width 1.80 m
- Bucket with grapple, 0.71 m^3, width 1.90 m
- Bucket with grapple, 0.75 m^3, width 2.00 m
- Bucket with grapple, 0.79 m^3, width 2.10 m
- Bucket with grapple, 0.83 m^3, width 2.20 m
- High dump bucket, 1.10 m^3, width 1.70 m
- High dump bucket, 1.16 m^3, width 1.80 m
- High dump bucket, 1.23 m^3, width 1.90 m
- High dump bucket, 1.30 m^3, width 2.00 m
- High dump bucket, 1.37 m^3, width 2.10 m
- High dump bucket, 1.44 m^3, width 2.20 m
- Square bale clamp, for bales 700 to 2100 mm wide
- Round bale clamp, for bales diameter 1000 to 1500 mm
- Levelling frame, width 1.75 m
- Levelling frame, width 2.00 m
- Levelling frame, width 2.50 m
- Snow blade, width 2.00 m, with hydraulic angle adjustment
- Snow blade, width 2.25 m, with hydraulic angle adjustment
- Snow blade, width 2.50 m, with hydraulic angle adjustment
- Push broom, 1.50 m, requires the quick coupler bracket for push broom
- Push broom, 1.90 m, requires the quick coupler bracket for push broom
- Push broom, 2.30 m, requires the quick coupler bracket for push broom
- L30 quick coupler bracket for push broom

ATTACHMENTS DL85-7

DL85-7

- Pallet forks attachment, class 3A, length 1000 mm
- Pallet forks attachment, class 3A, length 1200 mm
- Load backrest
- Hydraulic tine on auxiliary for forks attachment
- General purpose bucket, 0.73 m^3, width 1.70 m, no ground engaging tools, with spillguard
- General purpose bucket, 0.77 m^3, width 1.80 m, no ground engaging tools, with spillguard
- General purpose bucket, 1.01 m^3, width 1.75 m, no ground engaging tools, with spillguard
- General purpose bucket, 0.81 m^3, width 1.90 m, no ground engaging tools, with spillguard
- General purpose bucket, 0.85 m^3, width 2.00 m, no ground engaging tools, with spillguard
- General purpose bucket, 1.20 m^3, width 2.00 m, no ground engaging tools, with spillguard
- General purpose bucket, 0.90 m^3, width 2.10 m, no ground engaging tools, with spillguard
- General purpose bucket, 0.73 m^3, width 1.70 m, with 6 bolt-on teeth, with spillguard
- General purpose bucket, 0.77 m^3, width 1.80 m, with 7 bolt-on teeth, with spillguard
- General purpose bucket, 1.01 m^3, width 1.75 m, with 7 bolt-on teeth, with spillguard
- General purpose bucket, 0.81 m^3, width 1.90 m, with 7 bolt-on teeth, with spillguard
- General purpose bucket, 0.85 m^3, width 2.00 m, with 7 bolt-on teeth, with spillguard
- General purpose bucket, 1.20 m^3, width 2.00 m, with 7 bolt-on teeth, with spillguard
- General purpose bucket, 0.90 m^3, width 2.10 m, with 8 bolt-on teeth, with spillguard
- 4-in-1 bucket, 0.68 m^3, width 1.70 m, no ground engaging tools
- 4-in-1 bucket, 0.72 m^3, width 1.80 m, no ground engaging tools
- 4-in-1 bucket, 0.76 m^3, width 1.90 m, no ground engaging tools
- 4-in-1 bucket, 0.81 m^3, width 2.00 m, no ground engaging tools
- 4-in-1 bucket, 0.68 m^3, width 1.70 m, with 6 bolt-on teeth
- 4-in-1 bucket, 0.72 m^3, width 1.80 m, with 7 bolt-on teeth
- 4-in-1 bucket, 0.76 m^3, width 1.90 m, with 7 bolt-on teeth
- 4-in-1 bucket, 0.81 m^3, width 2.00 m, with 7 bolt-on teeth
- Road homologation protection, adjustable width 1100 to 1750 mm
- Skeleton bucket, 0.78 m^3, width 1.70 m, inner plate 1/2 of bucket height, without side walls, with spillguard
- Skeleton bucket, 0.82 m^3, width 1.80 m, inner plate 1/2 of bucket height, without side walls, with spillguard
- Skeleton bucket, 0.87 m^3, width 1.90 m, inner plate 1/2 of bucket height, without side walls, with spillguard
- Skeleton bucket, 0.92 m^3, width 2.00 m, inner plate 1/2 of bucket height, without side walls, with spillguard
- Skeleton bucket, 0.97 m^3, width 2.10 m, inner plate 1/2 of bucket height, without side walls, with spillguard
- Skeleton bucket, 1.01 m^3, width 2.20 m, inner plate 1/2 of bucket height, without side walls, with spillguard
- Light material bucket, 1.55 m^3, width 2.00 m
- Light material bucket, 1.54 m^3, width 1.70 m
- Light material bucket, 1.59 m^3, width 1.75 m
- Light material bucket, 1.63 m^3, width 1.80 m
- Light material bucket, 1.73 m^3, width 1.90 m
- Light material bucket, 1.81 m^3, width 2.00 m
- Light material bucket, 1.92 m^3, width 2.10 m
- Light material bucket, 2.02 m^3, width 2.20 m
- Manure fork with grapple, 1.60 m
- Manure fork with grapple, 1.70 m
- Manure fork with grapple, 1.80 m
- Manure fork with grapple, 1.90 m
- Manure fork with grapple, 2.00 m
- Manure fork with grapple, 2.10 m
- Bucket with grapple, 0.63 m^3, width 1.70 m
- Bucket with grapple, 0.67 m^3, width 1.80 m
- Bucket with grapple, 0.71 m^3, width 1.90 m
- Bucket with grapple, 0.75 m^3, width 2.00 m
- Bucket with grapple, 0.79 m^3, width 2.10 m
- Bucket with grapple, 0.83 m^3, width 2.20 m
- High dump bucket, 1.10 m^3, width 1.70 m
- High dump bucket, 1.16 m^3, width 1.80 m
- High dump bucket, 1.23 m^3, width 1.90 m
- High dump bucket, 1.30 m^3, width 2.00 m
- High dump bucket, 1.37 m^3, width 2.10 m
- High dump bucket, 1.44 m^3, width 2.20 m
- Square bale clamp, for bales 700 to 2100 mm wide
- Round bale clamp, for bales diameter 1000 to 1500 mm
- Levelling frame, width 1.75 m
- Levelling frame, width 2.00 m
- Levelling frame, width 2.50 m
- Snow blade, width 2.00 m, with hydraulic angle adjustment
- Snow blade, width 2.25 m, with hydraulic angle adjustment
- Snow blade, width 2.50 m, with hydraulic angle adjustment
- Push broom, 1.50 m, requires the quick coupler bracket for push broom
- Push broom, 1.90 m, requires the quick coupler bracket for push broom
- Push broom, 2.30 m, requires the quick coupler bracket for push broom
- L30 quick coupler bracket for push broom

Powered by **Innovation**

DISCOVER MORE:
COMPACT WHEEL LOADERS

DEVELON

HD Hyundai Infracore Europe s.r.o.
IBC - Pobřežní 620/3, 186 00 Praha 8-Karlín
Czech Republic

©2024 DEVELON D4601093-EN (10-24)

Certain specification(s) are based on engineering calculations and are not actual measurements. Specification(s) are provided for comparison purposes only and are subject to change without notice.
Specification(s) for your individual Develon equipment will vary based on normal variations in design, manufacturing, operating conditions, and other factors. Pictures of Develon units may show other than standard equipment.