DEVELON

## Compact Wheel Loaders

# DL60-7/DL65-7
# DL80-7/DL85-7
# DL80TL-7



| | DL60-7 | DL65-7 | DL80-7 | DL85-7 | DL80TL-7 |
|---|---|---|---|---|---|
| Maximum power | 66 hp | 66 hp | 75 hp | 75 hp | 75 hp |
| Operating weight | 3.75 t | 3.65 t | 5.2 t | 5.1 t | 5.2 t |



Meet our new range of compact wheel loaders ranging from 3.5 ton up to 5.0 ton classes.

# COMPACT, VERSATILE AND POWERFUL

Just like the heavier versions, the Develon Compact Wheel Loaders set the industry standard for productivity, flexibility, comfort, safety and reliability.

**FULL PACKAGE OF MODERN TECHNOLOGY INSIDE:**

Powerful Stage V engine
Hydrostatic 4-wheel drive
100% differential lock on both axles
Versatile and powerful hydraulics






# OUTSTANDING PRODUCTIVITY

Equipped with a Stage V compliant engine and powerful hydraulics, Develon's compact wheel loaders feature high lifting capacity combined with stability. Do more, get better results, and grow your business.

# POWER & PRODUCTIVITY

## STAGE V ENGINE

The machines are powered by an engine compliant with the latest emission regulations – Stage V. High-pressure fuel injection and precise timing provide highly efficient fuel burn and perfect combustion. The aftertreatment system is composed of an oxidation catalyst and long-life particulate filter to reduce emissions without requiring an SCR (Selective catalytic reduction).

## PRECISE, RESPONSIVE & SMOOTH DRIVING

The electronically controlled driving ensures extremely high driving comfort and precision and increases the machine's thrust. In addition, various travel modes are available.

## HYDROSTATIC TRANSMISSION (HST)

Hydrostatic Transmission (HST) boosts acceleration performance and delivers smooth, shock-free operation in all situations. Initial use of brake pedal provides inching function, which brakes the machine completely hydraulically. This saves fuel and provides faster hydraulic movement.

## HAND THROTTLE

The hand-throttle sets the (minimum) engine RPM. This optional function provides constant hydraulic power (AUX line) to be used by the connected hydraulic attachment (hydraulic motor).

## 100% DIFFERENTIAL LOCK ON BOTH AXLES

Our compact wheel loaders feature a 100% differential lock on both axles and a transmission that is both smooth and responsive. Thanks to superior traction, these machines guarantee a firm grip while generating plenty of pulling force.

## INCHING PEDAL

Initial use of brake pedal provides inching function, which brakes the machine completely hydraulically. This saves fuel, reduces axle temperature and provides more power for working hydraulics.

**No pressure on inch-brake pedal:**
Full power for the drive system (driving hydraulics)



**Light pressure on inch-brake pedal:**
Travel speed is reduced, more engine power for the working hydraulics



**Fully pressed inch-brake pedal:**
The machine stands still, full engine power for the working hydraulics



Engine power
Driving hydraulics
Working hydraulics




6
9
10
2
1
3
8
11
5




1. All-in-one joystick
2. Gauge panel
3. Adjustable steering column
4. Hand-throttle
5. Air suspended seat with safety belt
6. DAB Radio
7. Heater and A/C
8. Drink holder
9. Sunblind
10. Interior mirror
11. Inching pedal

# COMFORT & SAFETY

## CAB WITH ALL-DAY COMFORT

Focus on the job at hand thanks to numerous quality-of-life features such as a premium, air-suspended seat as standard, radio or powerful LED lights. Additionally, air conditioning is an option on all the models.

## 3 VERSIONS OF CAB – MAKE THE RIGHT CHOICE FOR YOUR NEEDS WITH ROPS/FOPS CERTIFICATION

All models are equipped with a safety roof as standard. For higher comfort, a safety roof deluxe or a fully closed cab are available. The use of narrow styles and skylight gives the operator all-round visibility and an excellent view on his work to allow safe and precise operation.

## ALL-IN-ONE JOYSTICK

Essential controls are always at your fingertips. Change driving direction and speed modes or adjust differential lock with ease. Full control over the hydraulics and a spool valve memory function help increase efficiency and control even more.

## STABILITY AND MANOEUVRABILITY

The articulated pendulum joint provides a lot of stability and maneuverability. The system ensures that all 4 wheels remain on the ground, even when working on uneven terrain. This not only allows you to work safely, but there is always sufficient traction. For extra productivity, it is possible to equip the DL80-7/DL85-7/DL80TL-7 with the patented Stabilo System. This system provides extra safety and comfort, because unevennesses are absorbed without any compromise to performance.






# TRULY MULTIPURPOSE

Need to use more than the bucket for a specialized job? Choose from a wide range of compatible work tools and a powerful High Flow option for up to 121 liters/minute.

# VERSATILITY & COMPACTNESS

## FULL FLEXIBILITY AND MAXIMUM TRACTION

Develon machines are designed to operate in tight spaces and in rough conditions. The optimal weight distribution and the compact dimensions ensure this. The articulated pendulum joint gives the machines a small turning radius and makes them extremely maneuverable. The system ensures that all 4 wheels are on the ground, even on rough terrain. This allows you to work safer, faster and always with enough traction.

## TRULY VERSATILE

Our compact wheel loaders are designed for a wide range of jobs. From warehouse to recycling, construction, agriculture, landscaping or road maintenance, our selection of attachments lets you tackle any challenges and grow your business.

## DO IT YOUR WAY

No matter the application, we have you covered. Personalize your machine with 3 types of kinematics to suit your preferences:

- Z-bar arm to ensure high breakout force and excellent loading heights.
- Pull-bar arm to benefit from lower front frame - excellent in extremely heavy work.
- Telescopic arm to provide maximal lifting height and reach.

## VERSATILE AND POWERFUL HYDRAULICS

Thanks to an optional tandem pump, a double-acting spool valve in the rear, and up to 3 double-acting spool valves on the lift arm, you always have enough hydraulic power at your fingertips for even the most demanding attachments and applications. A High Flow option is also available for the DL80, DL85 and DL80TL models.

## HYDRAULIC QUICK COUPLER

The Develon models are equipped with a hydraulic quick coupler as standard. This makes it possible to change attachments safely and within seconds.



# RAISE PROFITS, PRODUCTIVITY & FUEL EFFICIENCY




**DL60-7**



## POWER WITH LOW FUEL CONSUMPTION

The machines are driven by a powerful, 66 hp engine that is equipped with a catalytic converter (DOC) and a diesel particulate filter (DPF) and that meets the latest, EU Stage V, clean engine standards.

## COMFORT AND SAFETY

A comfortable safe working environment has been created in the ROPS/FOPS certified cab - so you will enjoy long working days. The steering column is fully adjustable and all necessary information can easily be read from a gauge panel.

## MAXIMUM PERFORMANCE IN ALL CONDITIONS

A wide selection of tires ensures you will always get maximum performance in your application. Adjustable mudguards provide the proper coverage to keep your machine clean and safe.

## PRODUCTIVITY AND TRACTION

The hydrostatic 4-wheel drive, with automotive control (Rexroth) and 100% switchable differential lock on both 14-ton axles, always provides enough traction, a lot of pulling force and smooth movement.

## TAILOR THE MACHINE FOR YOUR WORK

Develon compact wheel loaders can be configured completely according to your needs. Depending on your job, you choose a Z-bar or P-bar version.




**DL65-7**

# RAISE PROFITS, PRODUCTIVITY & FUEL EFFICIENCY

## POWER WITH LOW FUEL CONSUMPTION

The machines are driven by a powerful, 75 hp engine that is equipped with a catalytic converter (DOC) and diesel particle filter (DPF) and that meets the latest, EU Stage V, clean engine standards.

## COMFORT AND SAFETY

A comfortable safe working environment has been created in the ROPS/FOPS certified cab - so you will enjoy long working days. The steering column is fully adjustable and all necessary information can easily be read from a gauge panel.

## MAXIMUM PERFORMANCE IN ALL CONDITIONS

A wide selection of tires ensures you will always get maximum performance in your application. Adjustable mudguards provide the proper coverage to keep your machine clean and safe.

## PRODUCTIVITY AND TRACTION

The hydrostatic 4-wheel drive, with automotive control (Rexroth) and 100% switchable differential lock on both 16-ton axles, always provides enough traction, a lot of pulling force and smooth movement.

## TAILOR THE MACHINE FOR YOUR WORK

No matter the application, we have you covered. Personalize your machine with 3 types of kinematics to suit your preferences: choose the Z-Bar for the highest lifting height, the Pull-bar for highest lifting capacity or Telescopic for extended reach.

## HYDRAULIC POWER

The wide range of additional hydraulic connections match with your work tools. Most jobs demanding hydraulics are equipped with the High-Flow connection - up to 121 l/min.




**DL80-7**




DL80TL-7




DL85-7

# TECHNICAL SPECIFICATIONS DL60-7 & DL65-7

## ENGINE

**Model**
Kubota V2403

**No. of cylinders**
4

**Max. power**
48.5 kW/66 hp

**Max. torque**
198 N·m @ 1600 rpm

**Displacement**
2430 cm³

**Radiator**
Wide fin radiator

## TRANSMISSION AND AXLES

**Type**
Hydrostatic (HST)

**Travel speed**
30 km/h

**Axles**
14-ton axles with heavy planetary end drive

**Differential lock**
100% electrical differential lock on both axles

**Brakes**
Drum brakes

**Driving hydraulic**
112 l/min (450 bar)

## HYDRAULIC SYSTEM

**Type**
Gear pump

**Working hydraulic**
75 l/min (220 bar)

## FLUID CAPACITIES

| | DL60-7 | DL65-7 |
|---|---|---|
| Fuel tank | 68 l | 49 l |
| Cooling system | 11 l | |
| Engine oil | 9.5 l | |
| Front axle | 6.5 l | |
| Rear axle | 6.5 l | |
| Transmission oil | 0.5 l | |
| Hydraulic tank | 63 l | |

## LIFT ARM

| | DL60-7 | DL65-7 |
|---|---|---|
| Type | Z-bar | P-bar |
| Quick coupler | Hydraulic locking | |

## PERFORMANCE DATA & DIMENSIONS

| | | Unit | DL60-7 | DL65-7 |
|---|---|---|---|---|
| | Steering angle | ° | 40 | 40 |
| A | Wheelbase | mm | 1830 | 1830 |
| B | Total length – w/o attachment | mm | 3752 | 3752 |
| C | Length with bucket | mm | 4572 | 4572 |
| D | Max. height with cab | mm | 2325 | 2325 |
| E | Max. height with safety roof | mm | 2325 | 2325 |
| G | Max. dumping height | mm | 2450 | 1800 |
| H | Height at bucket pivot point | mm | 3290 | 2670 |
| J | Rollback angle on the ground | ° | 41 | 41 |
| K | Rollback angle at max. lift height | ° | 57 | 57 |
| L | Max. angle for bucket emptying | ° | 43 | 43 |
| | Width on standard tires | mm | 1340 | 1340 |
| | Turning radius with bucket | mm | 3425 | 3425 |
| | Turning radius over the tires | mm | 2970 | 2970 |

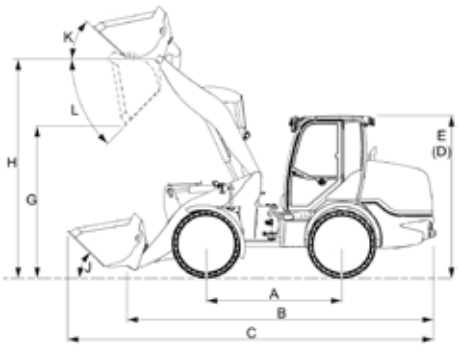

## STANDARD AND OPTIONAL EQUIPMENT

### Engine & powertrain
- ● Air pre-cleaner (centrifugal)
- ● Wide fin radiator
- ● HST – 30 km/h
- ● 2 drive ranges (Turtle/Hare)
- ● 100 % electrical differential lock on both axles
- ● Inching pedal
- ○ Hand throttle
- ○ Engine preheater (220V)

### Cab & operator comfort
- ● ROPS/FOPS safety roof
- ● Luxury air suspended seat with safety belt, armrest and extended backrest
- ● Multifunctional joystick
- ○ ROPS/FOPS safety roof deluxe
- ○ ROPS/FOPS cab
- ○ Heating
- ○ Air conditioned
- ○ Rear view mirrors

### Hydraulics
- ● Gear pump 75 l/min (220 bar)
- ● AUX – double acting function on lift arm
- ○ Electrically switchable tandem pump 65 l/min
- ○ AUX – additional double acting function on lift arm
- ○ Free hydraulic return
- ○ AUX – additional double acting function – rear
- ○ Free hydraulic return – rear

### Lift arm
- ● DL60-7: Z-bar kinematic
- ● DL65-7: P-bar kinematic
- ● Boom floating
- ○ Boom suspension

### Work tools
- ● Quick coupler
- ○ Different quick couplers (Euro, SMS, Euro/SMS, and others)

### Lights
- ● Working light on lift arm
- ○ Traffic light
- ○ Working light – front
- ○ Working light – rear
- ○ Beacon

### Electricity
- ● Battery master switch
- ○ 12 V socket – 3 pin (on lift arm, in cab, on rear)
- ○ Back-up alarm (acoustic)

## TIPPING LOAD - STRAIGHT

| Machine position | Payload position | DL60-7 | DL65-7 |
|---|---|---|---|
| Straight | S | 2875 kg | 3260 kg |
| | T | 2700 kg | 3020 kg |
| | U | 2160 kg | 2325 kg |
| Full turn | S | 2455 kg | 2780 kg |
| | T | 2300 kg | 2575 kg |
| | U | 1840 kg | 1985 kg |

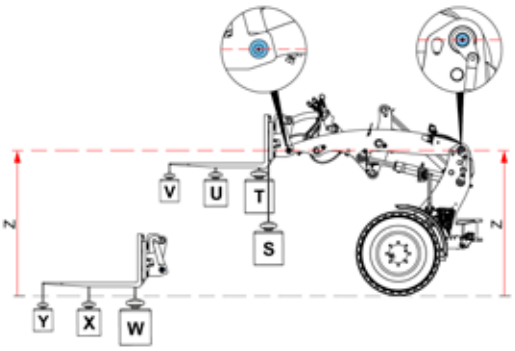






# TECHNICAL SPECIFICATIONS DL80-7, DL85-7 & DL80TL-7

## ENGINE

**Model**
Kubota V3307

**No. of cylinders**
4

**Max. power**
55 kW/75 hp

**Max. torque**
265 N·m @ 1500 rpm

**Displacement**
3330 cm³

**Radiator**
Wide fin radiator

## TRANSMISSION AND AXLES

**Type**
Hydrostatic (HST)

**Travel speed**
20 km/h (35 km/h optional)

**Axles**
16-ton axles with heavy planetary end drive

**Differential lock**
100% electrical differential lock on both axles

**Brakes**
Hydraulic multidisc brake SAHR

**Driving hydraulic**
145 l/min (450 bar)

## HYDRAULIC SYSTEM

**Type**
Gear pump

**Working hydraulic**
80 l/min (250 bar)

## FLUID CAPACITIES

| | |
|---|---|
| Fuel tank | 80 l |
| Cooling system | 12 l |
| Engine oil | 11.2 l |
| Front axle | 7.25 l |
| Rear axle | 7.25 l |
| Transmission oil | 1 l (2-gears: 1.5 l) |
| Hydraulic tank | 70 l |

## LIFT ARM

| | DL80-7 | DL85-7 | DL80TL-7 |
|---|---|---|---|
| Type | Z-bar | P-bar | Telescopic |
| Quick coupler | Hydraulic locking | | |

## PERFORMANCE DATA & DIMENSIONS

| | | Unit | DL80-7 | DL85-7 | DL80TL-7 |
|---|---|---|---|---|---|
| | Steering angle | ° | 40 | 40 | 40 |
| A | Wheelbase | mm | 2044 | 2044 | 2044 |
| B | Total length – w/o attachment | mm | 4165 | 4162 | 4554 |
| C | Length with bucket | mm | 5002 | 4993 | 5310 |
| D | Max. height with cab | mm | 2553 | 2553 | 2553 |
| E | Max. height with safety roof | mm | 2523 | 2523 | 2523 |
| G | Max. dumping height | mm | 2551 | 1919 | 3400 |
| H | Height at bucket pivot point | mm | 3500 | 2850 | 4350 |
| J | Rollback angle on the ground | ° | 45 | 45 | 41 |
| K | Rollback angle at max. lift height | ° | 54 | 43 | - |
| L | Max. angle for bucket emptying | ° | 46 | 46 | 41 |
| | Width on standard tires | mm | 1460 | 1460 | 1460 |
| | Turning radius with bucket | mm | 3589 | 3589 | 3738 |
| | Turning radius over the tires | mm | 3190 | 3190 | 3190 |

DL80-7 & DL85-7

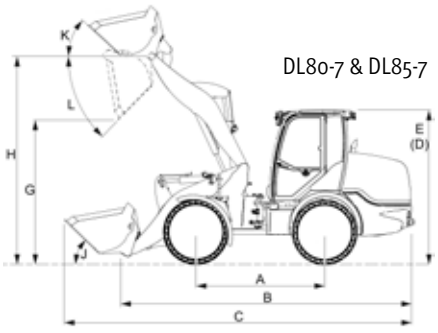


DL80TL-7

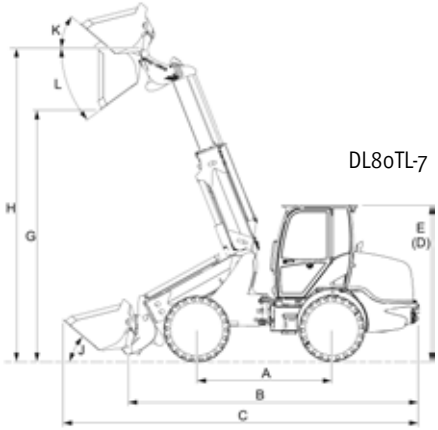

## STANDARD AND OPTIONAL EQUIPMENT

### Engine & powertrain

- ● Air pre-cleaner (centrifugal)
- ● Wide fin radiator
- ● HST – 20 km/h
- ● 2 drive ranges (Turtle/Hare)
- ● 100 % electrical differential lock on both axles
- ● Inching pedal
- ○ HST – 35 km/h
- ○ Hand throttle
- ○ Engine preheater (220V)

### Cab & operator comfort

- ● ROPS/FOPS safety roof
- ● Luxury air suspended seat with safety belt, armrest and extended backrest
- ● Multifunctional joystick
- ○ ROPS/FOPS safety roof deluxe
- ○ ROPS/FOPS cab
- ○ Heating
- ○ Air conditioned
- ○ Rear view mirrors

### Hydraulics

- ● Gear pump 80 l/min (250 bar)
- ● AUX – double acting function on lift arm – on arm
- ○ Electrically switchable tandem pump 43 l/min
- ○ Electrically switchable tandem pump High Flow 121 l/min
- ○ AUX – additional double acting function on lift arm
- ○ Free hydraulic return – on arm
- ○ AUX – additional double acting function – rear
- ○ Free hydraulic return – rear

### Lift arm

- ● DL80-7: Z-bar kinematic
- ● DL85-7: P-bar kinematic
- ● DL80TL-7: Telescopic arm
- ● Boom floating
- ○ Boom suspension

### Work tools

- ● Quick coupler
- ○ Different quick couplers (Euro, SMS, Euro/SMS, and others)

### Lights

- ● Working light on lift arm
- ○ Traffic light
- ○ Working light – front
- ○ Working light – rear
- ○ Beacon

### Electricity

- ● Battery master switch
- ○ 12 V socket – 3 pin (on lift arm, in cab, on rear)
- ○ Back-up alarm (acoustic)

## TIPPING LOAD - STRAIGHT

| Machine position | Payload position | DL80-7 | DL85-7 | DL80TL-7 |
|---|---|---|---|---|
| Straight | S | 3920 kg | 4375 kg | See in chart below |
| | T | 3680 kg | 4080 kg | |
| | U | 2965 kg | 3220 kg | |
| Full turn | S | 3280 kg | 3715 kg | |
| | T | 3080 kg | 3465 kg | |
| | U | 2480 kg | 2735 kg | |

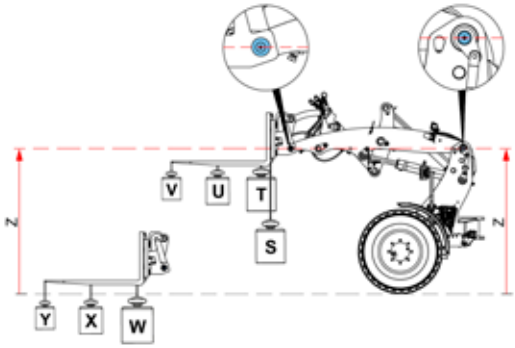


Tipping load - straight DL80TL-7

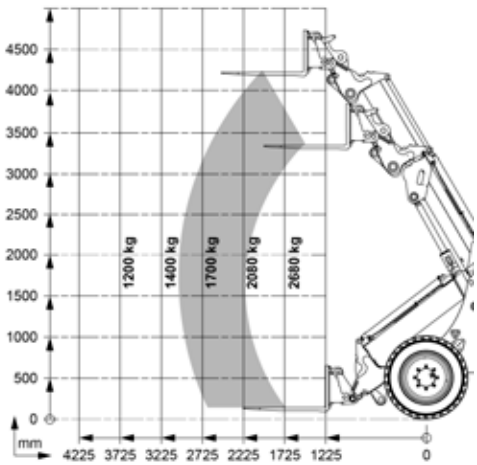








# ATTACHMENTS

## THE RIGHT ATTACHMENT FOR EVERY APPLICATION!

From warehouse to recycling, construction, agriculture, landscaping or road maintenance, our selection of attachments lets you tackle any challenges and improve your efficiency.



4 in 1 bucket



Clamp



Earth bucket



Levelling bucket



Levelling frame



Light material bucket



Manure forks



Pallet forks



Grapple bucket



Push brooms



Snow blade



Stone bucket

















# STANDARD AND OPTIONAL TIRES

● Standard ○ Optional

| | 11.5/80-15.3 AS | 15.0/55x17 AS | 405/70 R18 EM01 | 445/45-R19.5 GSP | 445/45-R19.5 Kargo | 480/45x17 AS | 500/45-20 AS | 500/45R22.5 GSP | 500/50R17 Ridemax |
|---|---|---|---|---|---|---|---|---|---|
| DL60 | ● | ○ | - | ○ | ○ | ○ | ○ | - | ○ |
| DL65 | ● | ○ | - | ○ | ○ | ○ | ○ | - | ○ |
| DL80 | ● | - | ○ | ○ | ○ | - | ○ | ○ | - |
| DL85 | ● | - | ○ | ○ | ○ | - | ○ | ○ | - |
| DL80TL | ● | - | ○ | ○ | ○ | - | ○ | ○ | - |



**GSP**



**AS**



**Kargo**



**AS**



**EM**



# ATTACHMENTS DL60-7 AND DL65-7

**DL60-7 and DL65-7**

- Pallet forks attachment, class 2A, length 1000 mm
- Pallet forks attachment, class 2A, length 1200 mm
- Load backrest
- Hydraulic tine on auxiliary for forks attachment
- General purpose bucket, 0.44 $m^3$, width 1.50 m, no ground engaging tools
- General purpose bucket, 0.58 $m^3$, width 1.60 m, no ground engaging tools
- General purpose bucket, 0.64 $m^3$, width 1.75 m, no ground engaging tools
- General purpose bucket, 0.44 $m^3$, width 1.50 m, with 6 bolt-on teeth
- General purpose bucket, 0.58 $m^3$, width 1.60 m, with 6 bolt-on teeth
- General purpose bucket, 0.64 $m^3$, width 1.75 m, with 7 bolt-on teeth
- 4-in-1 bucket, 0.37 $m^3$, width 1.50 m, no ground engaging tools
- 4-in-1 bucket, 0.40 $m^3$, width 1.60 m, no ground engaging tools
- 4-in-1 bucket, 0.44 $m^3$, width 1.75 m, no ground engaging tools
- 4-in-1 bucket, 0.37 $m^3$, width 1.50 m, with 6 bolt-on teeth
- 4-in-1 bucket, 0.40 $m^3$, width 1.60 m, with 6 bolt-on teeth
- 4-in-1 bucket, 0.44 $m^3$, width 1.75 m, with 7 bolt-on teeth
- Road homologation protection, adjustable width 1100 to 1750 mm
- Skeleton bucket, 0.57 $m^3$, width 1.50 m, inner plate 3/4 of bucket height, with side walls
- Skeleton bucket, 0.61 $m^3$, width 1.60 m, inner plate 3/4 of bucket height, with side walls
- Skeleton bucket, 0.67 $m^3$, width 1.75 m, inner plate 3/4 of bucket height, with side walls
- Light material bucket, 0.86 $m^3$, width 1.50 m
- Light material bucket, 0.92 $m^3$, width 1.60 m
- Light material bucket, 1.00 $m^3$, width 1.75 m
- Light material bucket, 1.15 $m^3$, width 2.00 m
- Manure fork with grapple, 1.50 m
- Manure fork with grapple, 1.60 m
- Manure fork with grapple, 1.75 m
- Bucket with grapple, 0.43 $m^3$, width 1.50 m
- Bucket with grapple, 0.46 $m^3$, width 1.60 m
- Bucket with grapple, 0.51 $m^3$, width 1.75 m
- High dump bucket, 0.80 $m^3$, width 1.50 m
- High dump bucket, 0.86 $m^3$, width 1.60 m
- High dump bucket, 0.94 $m^3$, width 1.75 m
- Square bale clamp, for bales 700 to 2100 mm wide
- Round bale clamp, for bales diameter 1000 to 1500 mm
- Levelling bucket, 0.61 $m^3$, width 1.50 m
- Levelling bucket, 0.65 $m^3$, width 1.60 m
- Levelling bucket, 0.72 $m^3$, width 1.75 m
- Kit sidewalls for levelling buckets
- Levelling frame, width 1.50 m
- Levelling frame, width 1.75 m
- Levelling frame, width 2.00 m
- Snow blade, width 1.80 m
- Snow blade, width 2.00 m
- Kit hydraulic angle adjustment for snow blades
- Push broom, 1.50 m, requires the quick coupler bracket for push broom
- Push broom, 1.90 m, requires the quick coupler bracket for push broom
- Push broom, 2.30 m, requires the quick coupler bracket for push broom
- L30 quick coupler bracket for push broom

# ATTACHMENTS DL80-7

**DL80-7**

- Pallet forks attachment, class 3A, length 1000 mm
- Pallet forks attachment, class 3A, length 1200 mm
- Load backrest
- Hydraulic tine on auxiliary for forks attachment
- general purpose bucket, 0.73 $m^3$, width 1.70 m, no ground engaging tools, with spillguard
- general purpose bucket, 0.77 $m^3$, width 1.80 m, no ground engaging tools, with spillguard
- general purpose bucket, 1.01 $m^3$, width 1.75 m, no ground engaging tools, with spillguard
- general purpose bucket, 0.81 $m^3$, width 1.90 m, no ground engaging tools, with spillguard
- general purpose bucket, 0.85 $m^3$, width 2.00 m, no ground engaging tools, with spillguard
- general purpose bucket, 1.20 $m^3$, width 2.00 m, no ground engaging tools, with spillguard
- general purpose bucket, 0.90 $m^3$, width 2.10 m, no ground engaging tools, with spillguard
- general purpose bucket, 0.73 $m^3$, width 1.70 m, with 6 bolt-on teeth, with spillguard
- general purpose bucket, 0.77 $m^3$, width 1.80 m, with 7 bolt-on teeth, with spillguard
- general purpose bucket, 1.01 $m^3$, width 1.75 m, with 7 bolt-on teeth, with spillguard
- general purpose bucket, 0.81 $m^3$, width 1.90 m, with 7 bolt-on teeth, with spillguard
- general purpose bucket, 0.85 $m^3$, width 2.00 m, with 7 bolt-on teeth, with spillguard
- general purpose bucket, 1.20 $m^3$, width 2.00 m, with 7 bolt-on teeth, with spillguard
- general purpose bucket, 0.90 $m^3$, width 2.10 m, with 8 bolt-on teeth, with spillguard
- 4-in-1 bucket, 0.68 $m^3$, width 1.70 m, no ground engaging tools
- 4-in-1 bucket, 0.72 $m^3$, width 1.80 m, no ground engaging tools
- 4-in-1 bucket, 0.76 $m^3$, width 1.90 m, no ground engaging tools
- 4-in-1 bucket, 0.81 $m^3$, width 2.00 m, no ground engaging tools
- 4-in-1 bucket, 0.68 $m^3$, width 1.70 m, with 6 bolt-on teeth
- 4-in-1 bucket, 0.72 $m^3$, width 1.80 m, with 7 bolt-on teeth
- 4-in-1 bucket, 0.76 $m^3$, width 1.90 m, with 7 bolt-on teeth
- 4-in-1 bucket, 0.81 $m^3$, width 2.00 m, with 7 bolt-on teeth
- Road homologation protection, adjustable width 1100 to 1750 mm
- Skeleton bucket, 0.78 $m^3$, width 1.70 m, inner plate 1/2 of bucket height, without side walls, with spillguard
- Skeleton bucket, 0.82 $m^3$, width 1.80 m, inner plate 1/2 of bucket height, without side walls, with spillguard
- Skeleton bucket, 0.87 $m^3$, width 1.90 m, inner plate 1/2 of bucket height, without side walls, with spillguard
- Skeleton bucket, 0.92 $m^3$, width 2.00 m, inner plate 1/2 of bucket height, without side walls, with spillguard
- Skeleton bucket, 0.97 $m^3$, width 2.10 m, inner plate 1/2 of bucket height, without side walls, with spillguard
- Skeleton bucket, 1.01 $m^3$, width 2.20 m, inner plate 1/2 of bucket height, without side walls, with spillguard
- Light material bucket, 1.55 $m^3$, width 2.00 m
- Light material bucket, 1.54 $m^3$, width 1.70 m
- Light material bucket, 1.59 $m^3$, width 1.75 m
- Light material bucket, 1.63 $m^3$, width 1.80 m
- Light material bucket, 1.73 $m^3$, width 1.90 m
- Light material bucket, 1.81 $m^3$, width 2.00 m
- Light material bucket, 1.92 $m^3$, width 2.10 m
- Light material bucket, 2.02 $m^3$, width 2.20 m
- Manure fork with grapple, 1.60 m
- Manure fork with grapple, 1.70 m
- Manure fork with grapple, 1.80 m
- Manure fork with grapple, 1.90 m
- Manure fork with grapple, 2.00 m
- Manure fork with grapple, 2.10 m
- Bucket with grapple, 0.63 $m^3$, width 1.70 m
- Bucket with grapple, 0.67 $m^3$, width 1.80 m
- Bucket with grapple, 0.71 $m^3$, width 1.90 m
- Bucket with grapple, 0.75 $m^3$, width 2.00 m
- Bucket with grapple, 0.79 $m^3$, width 2.10 m
- Bucket with grapple, 0.83 $m^3$, width 2.20 m
- High dump bucket, 1.10 $m^3$, width 1.70 m
- High dump bucket, 1.16 $m^3$, width 1.80 m
- High dump bucket, 1.23 $m^3$, width 1.90 m
- High dump bucket, 1.30 $m^3$, width 2.00 m
- High dump bucket, 1.37 $m^3$, width 2.10 m
- High dump bucket, 1.44 $m^3$, width 2.20 m
- Square bale clamp, for bales 700 to 2100 mm wide
- Round bale clamp, for bales diameter 1000 to 1500 mm
- Levelling frame, width 1.75 m
- Levelling frame, width 2.00 m
- Levelling frame, width 2.50 m
- Snow blade, width 2.00 m, with hydraulic angle adjustment
- Snow blade, width 2.25 m, with hydraulic angle adjustment
- Snow blade, width 2.50 m, with hydraulic angle adjustment
- Push broom, 1.50 m, requires the quick coupler bracket for push broom
- Push broom, 1.90 m, requires the quick coupler bracket for push broom
- Push broom, 2.30 m, requires the quick coupler bracket for push broom
- L30 quick coupler bracket for push broom

# ATTACHMENTS DL80TL-7

**DL80TL-7**

- Pallet forks attachment, class 3A, length 1000 mm
- Pallet forks attachment, class 3A, length 1200 mm
- Load backrest
- Hydraulic tine on auxiliary for forks attachment
- General purpose bucket, 0.73 $m^3$, width 1.70 m, no ground engaging tools, with spillguard
- General purpose bucket, 0.77 $m^3$, width 1.80 m, no ground engaging tools, with spillguard
- General purpose bucket, 1.01 $m^3$, width 1.75 m, no ground engaging tools, with spillguard
- General purpose bucket, 0.81 $m^3$, width 1.90 m, no ground engaging tools, with spillguard
- General purpose bucket, 0.85 $m^3$, width 2.00 m, no ground engaging tools, with spillguard
- General purpose bucket, 0.90 $m^3$, width 2.10 m, no ground engaging tools, with spillguard
- General purpose bucket, 0.73 $m^3$, width 1.70 m, with 6 bolt-on teeth, with spillguard
- General purpose bucket, 0.77 $m^3$, width 1.80 m, with 7 bolt-on teeth, with spillguard
- General purpose bucket, 1.01 $m^3$, width 1.75 m, with 7 bolt-on teeth, with spillguard
- General purpose bucket, 0.81 $m^3$, width 1.90 m, with 7 bolt-on teeth, with spillguard
- General purpose bucket, 0.85 $m^3$, width 2.00 m, with 7 bolt-on teeth, with spillguard
- General purpose bucket, 0.90 $m^3$, width 2.10 m, with 8 bolt-on teeth, with spillguard
- 4-in-1 bucket, 0.68 $m^3$, width 1.70 m, no ground engaging tools
- 4-in-1 bucket, 0.72 $m^3$, width 1.80 m, no ground engaging tools
- 4-in-1 bucket, 0.76 $m^3$, width 1.90 m, no ground engaging tools
- 4-in-1 bucket, 0.81 $m^3$, width 2.00 m, no ground engaging tools
- 4-in-1 bucket, 0.68 $m^3$, width 1.70 m, with 6 bolt-on teeth
- 4-in-1 bucket, 0.72 $m^3$, width 1.80 m, with 7 bolt-on teeth
- 4-in-1 bucket, 0.76 $m^3$, width 1.90 m, with 7 bolt-on teeth
- 4-in-1 bucket, 0.81 $m^3$, width 2.00 m, with 7 bolt-on teeth
- Road homologation protection, adjustable width 1100 to 1750 mm
- Skeleton bucket, 0.78 $m^3$, width 1.70 m, inner plate 1/2 of bucket height, without side walls, with spillguard
- Skeleton bucket, 0.82 $m^3$, width 1.80 m, inner plate 1/2 of bucket height, without side walls, with spillguard
- Skeleton bucket, 0.87 $m^3$, width 1.90 m, inner plate 1/2 of bucket height, without side walls, with spillguard
- Skeleton bucket, 0.92 $m^3$, width 2.00 m, inner plate 1/2 of bucket height, without side walls, with spillguard
- Skeleton bucket, 0.97 $m^3$, width 2.10 m, inner plate 1/2 of bucket height, without side walls, with spillguard
- Skeleton bucket, 1.01 $m^3$, width 2.20 m, inner plate 1/2 of bucket height, without side walls, with spillguard
- Light material bucket, 1.55 $m^3$, width 2.00 m
- Light material bucket, 1.54 $m^3$, width 1.70 m
- Light material bucket, 1.59 $m^3$, width 1.75 m
- Light material bucket, 1.63 $m^3$, width 1.80 m
- Light material bucket, 1.73 $m^3$, width 1.90 m
- Light material bucket, 1.81 $m^3$, width 2.00 m
- Light material bucket, 1.92 $m^3$, width 2.10 m
- Light material bucket, 2.02 $m^3$, width 2.20 m
- Manure fork with grapple, 1.60 m
- Manure fork with grapple, 1.70 m
- Manure fork with grapple, 1.80 m
- Manure fork with grapple, 1.90 m
- Manure fork with grapple, 2.00 m
- Manure fork with grapple, 2.10 m
- Bucket with grapple, 0.63 $m^3$, width 1.70 m
- Bucket with grapple, 0.67 $m^3$, width 1.80 m
- Bucket with grapple, 0.71 $m^3$, width 1.90 m
- Bucket with grapple, 0.75 $m^3$, width 2.00 m
- Bucket with grapple, 0.79 $m^3$, width 2.10 m
- Bucket with grapple, 0.83 $m^3$, width 2.20 m
- High dump bucket, 1.10 $m^3$, width 1.70 m
- High dump bucket, 1.16 $m^3$, width 1.80 m
- High dump bucket, 1.23 $m^3$, width 1.90 m
- High dump bucket, 1.30 $m^3$, width 2.00 m
- High dump bucket, 1.37 $m^3$, width 2.10 m
- High dump bucket, 1.44 $m^3$, width 2.20 m
- Square bale clamp, for bales 700 to 2100 mm wide
- Round bale clamp, for bales diameter 1000 to 1500 mm
- Levelling frame, width 1.75 m
- Levelling frame, width 2.00 m
- Levelling frame, width 2.50 m
- Snow blade, width 2.00 m, with hydraulic angle adjustment
- Snow blade, width 2.25 m, with hydraulic angle adjustment
- Snow blade, width 2.50 m, with hydraulic angle adjustment
- Push broom, 1.50 m, requires the quick coupler bracket for push broom
- Push broom, 1.90 m, requires the quick coupler bracket for push broom
- Push broom, 2.30 m, requires the quick coupler bracket for push broom
- L30 quick coupler bracket for push broom

# ATTACHMENTS DL85-7

**DL85-7**

- Pallet forks attachment, class 3A, length 1000 mm
- Pallet forks attachment, class 3A, length 1200 mm
- Load backrest
- Hydraulic tine on auxiliary for forks attachment
- General purpose bucket, 0.73 $m^3$, width 1.70 m, no ground engaging tools, with spillguard
- General purpose bucket, 0.77 $m^3$, width 1.80 m, no ground engaging tools, with spillguard
- General purpose bucket, 1.01 $m^3$, width 1.75 m, no ground engaging tools, with spillguard
- General purpose bucket, 0.81 $m^3$, width 1.90 m, no ground engaging tools, with spillguard
- General purpose bucket, 0.85 $m^3$, width 2.00 m, no ground engaging tools, with spillguard
- General purpose bucket, 1.20 $m^3$, width 2.00 m, no ground engaging tools, with spillguard
- General purpose bucket, 0.90 $m^3$, width 2.10 m, no ground engaging tools, with spillguard
- General purpose bucket, 0.73 $m^3$, width 1.70 m, with 6 bolt-on teeth, with spillguard
- General purpose bucket, 0.77 $m^3$, width 1.80 m, with 7 bolt-on teeth, with spillguard
- General purpose bucket, 1.01 $m^3$, width 1.75 m, with 7 bolt-on teeth, with spillguard
- General purpose bucket, 0.81 $m^3$, width 1.90 m, with 7 bolt-on teeth, with spillguard
- General purpose bucket, 0.85 $m^3$, width 2.00 m, with 7 bolt-on teeth, with spillguard
- General purpose bucket, 1.20 $m^3$, width 2.00 m, with 7 bolt-on teeth, with spillguard
- General purpose bucket, 0.90 $m^3$, width 2.10 m, with 8 bolt-on teeth, with spillguard
- 4-in-1 bucket, 0.68 $m^3$, width 1.70 m, no ground engaging tools
- 4-in-1 bucket, 0.72 $m^3$, width 1.80 m, no ground engaging tools
- 4-in-1 bucket, 0.76 $m^3$, width 1.90 m, no ground engaging tools
- 4-in-1 bucket, 0.81 $m^3$, width 2.00 m, no ground engaging tools
- 4-in-1 bucket, 0.68 $m^3$, width 1.70 m, with 6 bolt-on teeth
- 4-in-1 bucket, 0.72 $m^3$, width 1.80 m, with 7 bolt-on teeth
- 4-in-1 bucket, 0.76 $m^3$, width 1.90 m, with 7 bolt-on teeth
- 4-in-1 bucket, 0.81 $m^3$, width 2.00 m, with 7 bolt-on teeth
- Road homologation protection, adjustable width 1100 to 1750 mm
- Skeleton bucket, 0.78 $m^3$, width 1.70 m, inner plate 1/2 of bucket height, without side walls, with spillguard
- Skeleton bucket, 0.82 $m^3$, width 1.80 m, inner plate 1/2 of bucket height, without side walls, with spillguard
- Skeleton bucket, 0.87 $m^3$, width 1.90 m, inner plate 1/2 of bucket height, without side walls, with spillguard
- Skeleton bucket, 0.92 $m^3$, width 2.00 m, inner plate 1/2 of bucket height, without side walls, with spillguard
- Skeleton bucket, 0.97 $m^3$, width 2.10 m, inner plate 1/2 of bucket height, without side walls, with spillguard
- Skeleton bucket, 1.01 $m^3$, width 2.20 m, inner plate 1/2 of bucket height, without side walls, with spillguard
- Light material bucket, 1.55 $m^3$, width 2.00 m
- Light material bucket, 1.54 $m^3$, width 1.70 m
- Light material bucket, 1.59 $m^3$, width 1.75 m
- Light material bucket, 1.63 $m^3$, width 1.80 m
- Light material bucket, 1.73 $m^3$, width 1.90 m
- Light material bucket, 1.81 $m^3$, width 2.00 m
- Light material bucket, 1.92 $m^3$, width 2.10 m
- Light material bucket, 2.02 $m^3$, width 2.20 m
- Manure fork with grapple, 1.60 m
- Manure fork with grapple, 1.70 m
- Manure fork with grapple, 1.80 m
- Manure fork with grapple, 1.90 m
- Manure fork with grapple, 2.00 m
- Manure fork with grapple, 2.10 m
- Bucket with grapple, 0.63 $m^3$, width 1.70 m
- Bucket with grapple, 0.67 $m^3$, width 1.80 m
- Bucket with grapple, 0.71 $m^3$, width 1.90 m
- Bucket with grapple, 0.75 $m^3$, width 2.00 m
- Bucket with grapple, 0.79 $m^3$, width 2.10 m
- Bucket with grapple, 0.83 $m^3$, width 2.20 m
- High dump bucket, 1.10 $m^3$, width 1.70 m
- High dump bucket, 1.16 $m^3$, width 1.80 m
- High dump bucket, 1.23 $m^3$, width 1.90 m
- High dump bucket, 1.30 $m^3$, width 2.00 m
- High dump bucket, 1.37 $m^3$, width 2.10 m
- High dump bucket, 1.44 $m^3$, width 2.20 m
- Square bale clamp, for bales 700 to 2100 mm wide
- Round bale clamp, for bales diameter 1000 to 1500 mm
- Levelling frame, width 1.75 m
- Levelling frame, width 2.00 m
- Levelling frame, width 2.50 m
- Snow blade, width 2.00 m, with hydraulic angle adjustment
- Snow blade, width 2.25 m, with hydraulic angle adjustment
- Snow blade, width 2.50 m, with hydraulic angle adjustment
- Push broom, 1.50 m, requires the quick coupler bracket for push broom
- Push broom, 1.90 m, requires the quick coupler bracket for push broom
- Push broom, 2.30 m, requires the quick coupler bracket for push broom
- L30 quick coupler bracket for push broom

Powered by **Innovation**

**DISCOVER MORE:**
**COMPACT WHEEL LOADERS**

DEVELON

HD Hyundai Infracore Europe s.r.o.
IBC - Pobřežní 620/3, 186 00 Praha 8-Karlín
Czech Republic

©2024 DEVELON D4601093-EN (10-24)

Certain specification(s) are based on engineering calculations and are not actual measurements. Specification(s) are provided for comparison purposes only and are subject to change without notice.
Specification(s) for your individual Develon equipment will vary based on normal variations in design, manufacturing, operating conditions, and other factors. Pictures of Develon units may show other than standard equipment.