DEVELON

Articulated Dump Trucks

DA45 4x4



Maximum power	500 hp
Operating weight	71.5 t
Body capacity	25.7 m^3

THE BEST SOLUTION FOR SLIPPERY AND OFF-ROAD CONDITIONS

PRODUCTIVITY

The Develon DA45 4X4 offers the best combination of payload and efficiency. Thanks to its unique design, excellent productivity is delivered in all working conditions.

DIFFERENTIALS

Front and rear differentials are limited slip – the longitudinal differential can be manually locked by pushing the button on the control panel.



QUALITY OF RIDE

New self-leveling, front and rear hydro-gas suspension system supports soft ride in harsh conditions.

FLEXIBILITY

4x4 ADT technology offers outstanding performance capabilities in slippery and off-road conditions – for applications where you have longer haul distance, relatively good roads, high haul speed – conditions that are too easy for a 6x6 but too heavy for RDT. In the wet weather conditions in which rigid dump trucks are forced to stop, the 4x4 ADT delivers optimal operating performance. Two axles cause less damage to the terrain compared to the 6x6 configuration.

PURPOSE AND ABILITIES



KEY POINTS

- Optimal operating performance in wet weather conditions in which RDT are forced to stop
- Good performance in slippery and off-road conditions
- Outstanding climbing abilities
- Short turning radius
- Low rolling resistance - less wear on the rear tires
- 2 axles cause less damage to the terrain

APPLICATIONS AND CONDITIONS

- Mining & quarry
- Harder and uneven ground
- Optimal performance in all weather conditions
- Longer haul distance and relatively good roads, high haul speed

TAKE A TOUR OF THE DA45 4X4

PERFORMANCE:

The 4x4 ADT climbs bigger inclines than the RDT, and performs better in wet conditions.

OPERATOR'S ENVIRONMENT:

Ergonomic controls, most spacious cab in the market, high-class seat, Bluetooth radio with USB, and much more...



OPERATE AT EASE:

- 7-inch LCD monitor panel, right-hand side control
- Panel for more convenient use, suspension based real life
- Payload meter with external light
- Back-up indication, rear-view camera, body tip
- Boost button, etc.

POWER:

Unstoppable Stage V compliant Scania DC13 engine: 368 kW (500 hp) at 2100 rpm.

MANEUVERABILITY:

Design of the rear frame, body, and front-mounted differential on transmission make this Develon machine the most compact ADT in its class, which results in short turning radius and outstanding stability.

SAFETY HIGHLIGHTS:

Gradient meter with body flip-over protection, Body Over Centre of Gravity function, fenders and hand rails all around cab, superior stability and always visible and clean front cab access.

BODY:

- Steel plates with 400 HB hardness
- Capacity: 25.7 m³
- Body heating & wear plates available as optional equipment.



TELEMATICS:

Monitor your fleet online. As standard, DEVELON Fleet Management Web with dual mode (satellite, GSM). Check productivity, fuel consumption, system warnings, maintenance status, etc.

BRAKE SYSTEMS:

Oil-cooled wet disc brakes (lifetime up to 15000 hours), standard electronic engine brake, hold brake, hydraulic transmission retarder & parking brake.

SERVICE ACCESSIBILITY:

Diesel, AdBlue and grease (for auto-lube system) filling from ground level. Easy access to filters and oil filling points. Tiltable cab with self-positioning locking mechanism.



DESIGN SIMPLICITY

Our special front-mounted turning ring provides equal power & weight distribution and excellent operating performance. The sloping rear frame provides a lower center of gravity – improving the ADT's overall stability and ensuring fast and easy tipping of the body for increased productivity.

TOP PERFORMANCE AND FUEL EFFICIENCY

ENGINES – LOWER EMISSIONS, SAME GREAT PERFORMANCE

Develon ADTs use only proven, reliable and powerful diesel Scania engines with excellent torque, which achieve low fuel consumption and fulfill Stage V European regulation requirements.

PAYLOAD METER

Our standard rear suspension based real-life payload & load count meter provides the Develon operator and owner with an immediate indication of the productivity. External indication lights help load the body more efficiently.

DOWNHILL SPEED MODULATION

Powerful hydraulic retarder keeps machine's speed constant on downhills without support of service brakes. Operator can easily adjust the retarder's power by lever or simply by pushing the gas pedal.

FORWARD-MOUNTED TURNING RING

The turning ring is located in front of the articulation point, ensuring equal weight distribution to the front wheels in all operating situations, including maximum turning. The equal weight distribution enables you to use the limited slip differentials with only 45% locking value – ensuring drive to both front wheels in all situations, without completely locking the wheels.

DESIGN FEATURES

- 1 axle with 2 × twin wheels and hydropneumatic suspension
- New Overload Protection (OLP) based on rear suspension cylinder pressure
- Brake assistance (automatic parking brake) for hill assist and dump brake assist









THE IDEAL WORKSPACE DESIGNED AROUND YOU

BEST-IN-CLASS OPERATOR ENVIRONMENT

The DA45 cab was designed based on the feedback received directly from hundreds of Develon operators. This resulted in an upgrade of the cab in features and functions required by the market, including: hand grip on the right side, foot rest, improved storage room, USB charger, Bluetooth radio, all around rails outside the cab, additional lever for retarder control and a number of other new features.

HIGH-COMFORT AIR-SUSPENSION SEAT

Because a highly comfortable seat means a lot to every operator, we provide an air-suspension seat with armrest as standard.

ONE KEY SOLUTION

To enter and safely operate your Develon ADT, you need just 1 key to lock and unlock all the doors and also start the engine.

SELF-LEVELING, HYDRO-GAS FRONT SUSPENSION

The Develon suspension system delivers outstanding performance
in rough terrain thanks to the hydraulic suspension cylinders' great shock absorption capacity. On top of that, the front self-leveling system can adjust to match changing working conditions.

STORAGE COMPARTMENTS WITH EXTRA 12 V POWER SUPPLY

Plenty of storage spaces, plus extra room designed to fit cool/hot box with additional 12V power supply.

MP3, DAB AND BLUETOOTH

Standard radio supports all modern features like MP3, DAB and Bluetooth.

CLIMATE CONTROL

Our specially designed climate control is easy to operate and highly efficient - keeping you comfortable at all times.

















BIGGEST CAB IN THE INDUSTRY

The spacious ROPS/FOPS cab is equipped with climate control and a high-quality operator seat with air suspension to provide excellent comfort. Precise steering, good visibility, low noise levels (72 dB(A), ISO6395) and optional vertical movement provide additional comfort and quiet.

- The sloping hood gives the operator an excellent view
- The cab is mounted on a special rubber suspension to reduce vibration and conduction of noise into the cab

LCD COLOR MONITOR PANEL

- 7”-color display, resolution 800 x 480 pixels
- Shows all necessary information for driving and handling the machine
- Rear-view camera image embedded in instrumentation graphics
- Backlight dimming according to ambient light conditions
- Sub-menus for additional and diagnostic functions

TOUCH PAD

- Diesel fuel heater ON/OFF
- Longitudinal differential lock
- Override button
- Cab roof and mirror arm front lights ON/OFF
- Rotating beacon ON/OFF (optional)
- Operating work-lights ON/OFF

DIFFERENTIAL ACTIVATION

With automatic limited slip differentials, automatic and manual transmission shift, power steering, 'simple touchpad' and 'easy to read' display, every ADT is as simple to use & operate as possible.

BODY HOIST LEVER

The new fingertip-controlled body hoist lever is easy to operate. This electronically managed hoist lever incorporates a higher body up speed and an automatic body down feature, with soft touch down, to keep you safe at all times.

'TIP-TRONIC' GEAR SHIFT

To ensure the smoothest possible gear shifts and momentum, you can run the truck in both automatic and manual gears.

RETARDER FORCE MODULATION LEVER

New lever located on the right-hand side below the steering wheel enables operator to choose from 4 power modes. On top of that, the gas pedal is responsible for retarder power reduction.

HOLD BRAKE

Newly developed brake system allows the machine to be maintained in a stopped position, even when the operator takes his foot off the brake pedal.



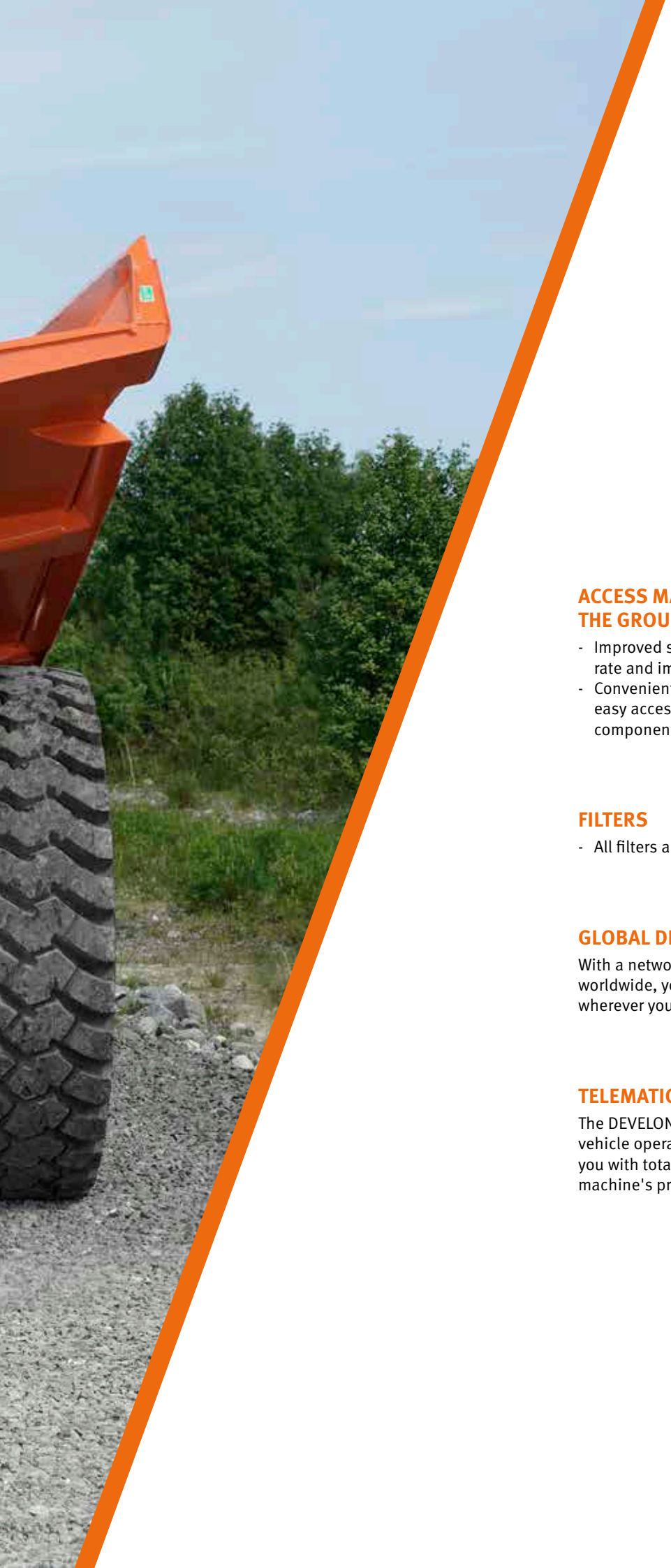

SIMPLE MAINTENANCE FOR MAXIMUM UPTIME

ACCESS MAIN FILLING POINTS WHILE STANDING ON THE GROUND

- Improved simplicity of maintenance and service reduces failure rate and improves lifetime and longevity
- Convenient position of liquids' levels check and filling points, easy access to filters and very low number of rubber wearing components significantly reduce labor time

FILTERS

- All filters are centralized for quick and easy access

GLOBAL DEVELON NETWORK

With a network of Develon Dealers & Parts Distribution Centers worldwide, your Develon trucks can be serviced & maintained wherever you are.

TELEMATICS

The DEVELON Fleet Management Web is available for reading out vehicle operating & production parameters remotely, providing you with total ease-of-mind. Keep a day-by-day overview of the machine's productivity, status and condition.

TECHNICAL SPECIFICATIONS

ENGINE

Complies with Stage V of EU Directive 97/68/EC for emissions. Water-cooled, diesel engine with turbo charger and air-to-air intercooler.

Model
Scania DC 13

No. of cylinders
6

Rated power at 2100 rpm

ISO 3046	368 kW
ISO 14396	360 kW

Gross torque
2476 Nm @ 1300 rpm

Cylinder volume
12.7 l

Bore × stroke
130 × 160 mm

Air filter
dry type

ELECTRICAL SYSTEM

Batteries
2 × 12 V / 105 Ah (series connected to give 24 V)

Starter
6 kW

Alternator
24 V / 100 A

SPEEDS

Forward 1 – 2 – 3 – 4 – 5 – 6 – 7 – 8
6 - 9 - 12 - 17 - 24 - 34 - 48 - 55 km/h

Reverse 1 – 2 – 3 – 4
6 - 9 - 12 - 17 km/h

WEIGHTS

Unloaded

Front	15500 kg
Rear	15000 kg
Total	30500 kg

Loaded

Front	23500 kg
Rear	48500 kg
Total	72000 kg

Payload
41000 kg

BODY

Body capacity (Heaped SAE 2:1/struck)
25.7 m³ / 19.4 m³

Material
Hardened abrasion-resistant steel plates (400 HB)

Tilt cylinders
Single stage, double-acting

Tipping time
Up: 12 sec. / Down: 10 sec.

Body
Designed for exhaust heating

Sloping frame
Down from the hinge point

TRANSMISSION

Electronically-controlled automatic transmission with retarder. The torque converter has automatic lock-up in all gears.

Type (ZF 8EP-420)
8 speed forward, 4 speed reverse, full auto, power-shift

HYDRAULIC SYSTEM

1 variable displacement piston pump for steering & tipping and for cooling fan, brakes & auxiliaries
294 l/min @ 2100 rpm

Main safety valves pressures / circuit

Tipping	280 bar
Steering	210 bar

TIRES

Standard
29.5 R25 /21.00 R33

FLUID CAPACITIES

Fuel tank	530 l
Hydraulic system	100 l
Front differential	9,4 l
Transmission	69 l
Hub front	9,6 l
Rear axle, rear differential and rear hub	78,5 l
Cooling circuit	50 l
Engine	45 l

DIMENSIONS

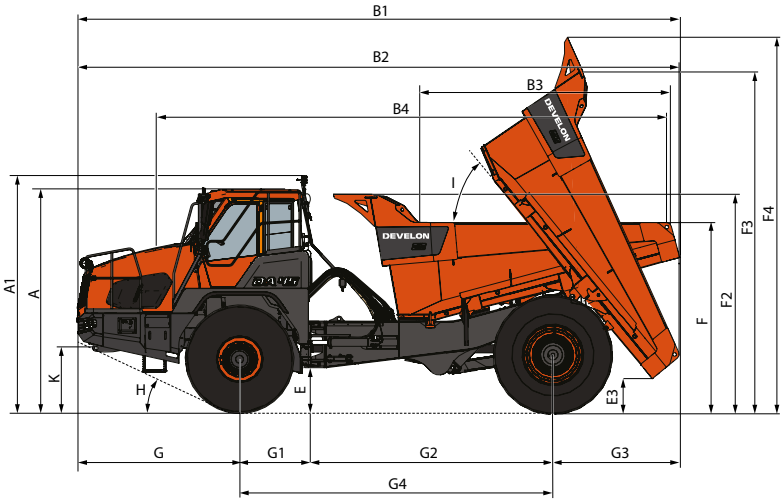

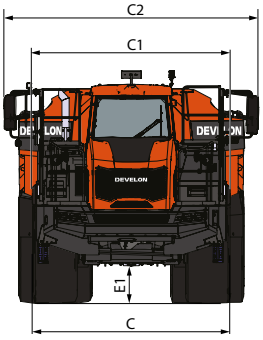

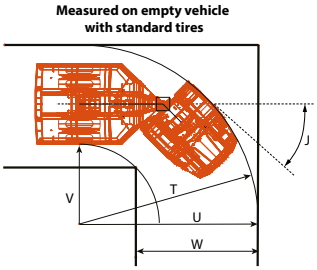

DIMENSIONS

		Unit	
A	Transport position/CAB height	mm	3850
A1	Rotating beacon	mm	4050
B1	Fully length with tailgate	mm	10435
B2	Fully length tipped	mm	10350
C	Over mudguard	mm	3400
C1	Over mirror operating position	mm	4250
E	Ground clearance art. hinge	mm	627
E1	Ground clearance front axle	mm	650
E3	Ground clearance bin fully tipped	mm	437
F	Load over height	mm	3235
F2	Bin tip height	mm	2789
G	Front axle center to machine front	mm	2818
G1	Front axle center to art. hinge	mm	1275
G2	Art. hinge to rear axle center	mm	4150
G3	Rear axle center to bin rear	mm	2192
G4	Front axle center to rear axle center	mm	5345
H	Approch angle front	°	26.7
I	Maximum bin tip angle	°	55
J	Maximum articulation steering angle	°	44
K	Front tie-down height	mm	1063
T	Outer wheel turning radius	mm	8420
U	Outer turning radius	mm	8880
V	Inner turning radius	mm	3870
W	Corridor width	mm	6030

POWER TO WEIGHT RATIO

Empty – loaded

11.8 kW/t – 5.0 kW/t

SPECIAL FEATURES

Suspension

- Front: Semi-independent, self-leveling hydro-gas suspension
- Rear: hydro-gas suspension

Articulation hinge and steering

- Articulation hinge with forward-mounted turning ring
- Steering cylinders (2): Double-acting
- The steering is approved according to ISO 5010
- Max. steering angle: 45°
- Ground-driven emergency steering pump

Driveline

- Full-time 4 × 4 drive with 2 transverse differentials and one longitudinal
- Front axle transverse differential: Limited-slip diff lock with 45% locking ratio
- Rear axle transverse differential: Limited-slip diff lock with 45% locking ratio
- Inter-axle longitudinal differential:
  - Torque-proportioning differential, integrated into the ZF transmission
  - Torque distribution:
    - 1/3 to the front axle
    - 2/3 to the rear axle
    - 100 % lockable

Brake system

- Dual circuit braking system
- Approved according to ISO 3450
- All hydraulic-operated brakes with enclosed oil-cooled wet multiple discs
- Spring actuated hydraulic released parking brake, mounted on driveline shaft
- Max. gradient, parking brake: 15°
- Automatic transmission retarder as standard

Cab

- Approved to ROPS/FOPS standards (ISO 3471, ISO 3449)
- Low interior sound level: 72 dB(A) (ISO 6395)
- External sound level: 108 dB(A) (ISO 6396)
- The cab is centrally located on rubber mountings
- Hand and arm vibrations are less than 2.5 ms^2 (ISO 5349-2)
- Whole body vibration is less than 0.5 ms^2 according to ISO 2631-1
- Superior visibility - for safer operation
- Superior operating controls location
- Adjustable suspended operator seat
- Adjustable steering column
- Climate control – Heater and air conditioning
- Tilting for service access
- All-around hand rails

STANDARD AND OPTIONAL EQUIPMENT

● Standard ○ Optional

Engine

- ● Scania, Stage V compliant, SCR, DPF, water-cooled, diesel engine with VGT turbo charger and air-to-air intercooler

Hydraulic system

- ● 1 variable displacement piston pump for steering & tipping
- ● One return flow filter

Cab & interior

- ● Armrest at operator seat
- ● Headrest at operator seat
- ● Safety belt at operator and instructor seat
- ● Adjustable steering column
- ● All instrumentation in LCD display
- ● Cigarette lighter
- ● 12V and USB charging point
- ● Retractable roller sunblind
- ● Tinted safety glass
- ● Sliding window (left & right side)
- ● Windshield wiper and washer
- ● Side mirrors
- ● Protection for rear window
- ● Emergency steering, ground-driven
- ● Radio/MP3 and Bluetooth
- ● Cab tilting system
- ● Emergency shutdown switch
- ● Anti-slip steps & platform
- ● Cool box compartment
- ● Storage space
- ● Electronic climate control
- ● High-comfort seat (vertical and longitudinal suspension)
- ● Heated operator seat
- ● Heated mirror
- ● Electrically adjustable mirrors

Safety

- ● Gradient meter with anti-flip-over protection system
- ● Payload meter & cycle counter
- ● Wet disc brake
- ● Rear-view camera
- ● Hammer for emergency escape
- ● Hand rails on the fenders
- ○ Seat belt green warning light
- ○ Blue or orange flashing reverse light
- ○ White noise alarm

Other

- ● Transmission retarder brake
- ● Automatic lubrication system
- ● DEVELON Fleet Management Web (telematic system)
- ● Mud flaps
- ● Towing hook, front and rear
- ● Work light kit (rear and front)
- ○ Webasto heating system (heat up the cooling system)
- ○ Electrical engine heater
- ○ Fire extinguisher
- ○ First aid kit
- ○ Beacon
- ○ Light bar
- ○ Speed limitation
- ○ Work light kit (rear and front) LED
- ○ Tool kit
- ○ Warning triangle
- ○ Fast fill
- ○ Tire pressure monitoring system (may not be available with all tires)
- ○ Electric diesel refueling pump

Undercarriage

- ○ Quarry
- ○ Earthmoving
- ○ Flotation tires

Some of these options may be standard in some markets. Some of these options may not be available for certain markets. Please check with your local DEVELON dealer for more information about availability or to adapt your machine to your application needs.

Powered by **Innovation**

DISCOVER MORE:
DA45 4x4

DEVELON

DOOSAN Infracore Europe s.r.o.
IBC - Pobřežní 620/3, 186 00 Praha 8-Karlín
Czech Republic

©2023 DEVELON D4601191-EN (04-23)

Certain specification(s) are based on engineering calculations and are not actual measurements. Specification(s) are provided for comparison purposes only and are subject to change without notice.
Specification(s) for your individual Develon equipment will vary based on normal variations in design, manufacturing, operating conditions, and other factors. Pictures of Develon units may show other than standard equipment.