DEVELON

Articulated Dump Trucks

DA30
DA45



	DA30	DA45
Maximum power	375 hp	500 hp
Operating weight	51.5 t	71.5 t
Body capacity	17.8 m^3	26.1 m^3

TAKE A TOUR OF THE DA30

PRODUCTIVITY

The DA30 offers best-in-class ground clearance & ground bearing pressure. Combined with superior torque at low engine RPM, and superior power and traction, we offer you the best productivity.

OPERATOR'S ENVIRONMENT

Ergonomic controls, most spacious cab in the market, high-class seat, Bluetooth radio with USB, and much more...



OPERATE AT EASE

Upgraded monitor panel, new control panel for more convenient use, real-life payload meter with external light indication, rear-view camera, body tip boost button, etc.

POWER

Scania DC 09 engine: 276 kW (375 HP) at 2100 rpm with electronic exhaust brake.

NEW QUALITY OF RIDE

New self-leveling, hydro-gas suspension supports soft ride in harsh conditions.

MANEUVERABILITY

Unique design of rear frame, body, and front-mounted differential on transmission make the Develon machine the most compact ADT in its class, which results in smallest turning radius and outstanding stability.

DIFFERENTIAL

Front and rear differentials are limited slip, longitudinal differential can be manually locked by pushing 1 button.

Some equipment shown on the machine may be optional in your region

SAFETY HIGHLIGHTS

Gradient meter with body flip-over protection, Body Over Centre of Gravity function, fenders and hand rails all around cab, superior stability and always visible and clean front cab access.



BODY

Steel plates with 400 HB hardness. Capacity without/with tailgate: 16.8/17.8 m³. Tailgate, body heating & wear plates available as optional equipment.

TELEMATICS

Monitor your fleet online. As standard, Develon Fleet Management with dual mode (satellite, GSM). Check productivity, fuel consumption, system warnings, maintenance status, etc.

BRAKE SYSTEMS

Oil-cooled wet disc brakes (lifetime up to 15000 hours). Standard hydraulic transmission retarder & hydraulic parking brake.

SERVICE ACCESSIBILITY

Diesel, AdBlue and grease (for auto-lube system) filling from ground level. Easy access to filters and oil filling points. Tiltable cab with self-positioning locking mechanism.



TAKE A TOUR OF THE DA45

PRODUCTIVITY

The Develon DA45 offers the best combination of payload and efficiency in its class. Thanks to its unique design, best productivity is delivered in all working conditions.

OPERATOR'S ENVIRONMENT

Ergonomic controls, most spacious cab in the market, high-class seat, Bluetooth radio with USB, and much more...



OPERATE AT EASE

Upgraded monitor panel, new control panel for more convenient use, real-life payload meter with external light indication, rear-view camera, body tip boost button, etc.

POWER

Unstoppable Stage V compliant Scania DC13 engine: 368 kW (500 HP) at 2100 rpm.

NEW QUALITY OF RIDE

New self-leveling, hydro-gas suspension supports soft ride in harsh conditions.

MANEUVERABILITY

Unique design of rear frame, body, and front-mounted differential and transmission make the Develon machine the most compact ADT in its class, which results in smallest turning radius and outstanding stability.

DIFFERENTIAL

Front and rear differentials are limited slip, longitudinal differential can be manually locked by pushing 1 button.

Some equipment shown on the machine may be optional in your region

SAFETY HIGHLIGHTS

Gradient meter with body flip-over protection, Body Over Centre of Gravity function, overload protection system with external traffic lights, fenders and hand rails all around cab, superior stability and always visible and clean front cab access.



BODY

Steel plates with 400 HB hardness. Capacity with/without tailgate: 24.5/26.1 m³. Tailgate, body heating & wear plates available as optional equipment.

TELEMATICS

Monitor your fleet online. As standard, Develon Fleet Management with dual mode (satellite, GSM). Check productivity, fuel consumption, system warnings, maintenance status, etc.

BRAKE SYSTEMS

Oil-cooled wet disc brakes (lifetime up to 15000 hours). Standard electronic engine brake, hydraulic transmission retarder & parking brake.

SERVICE ACCESSIBILITY

Diesel, AdBlue and grease (for auto-lube system) filling from ground level. Easy access to filters and oil filling points. Tiltable cab with self-positioning locking mechanism.



THE POWER TO RAISE PRODUCTIVITY

The Develon ADT concept offers a larger load capacity in all weight categories. Additional load capacity, combined with superior power and traction, improve productivity. The unique advantages of the Develon ADT's permanent 6-wheel drive, free-swinging rear tandem, front-mounted turning ring, independent front wheel suspension, and sloping rear frame provide excellent driving stability with equal weight distribution and superior traction. The Develon Articulated Dump Truck is designed to work under very tough conditions and travel up to 55 km/h.

TOP PERFORMANCE AND FUEL EFFICIENCY

ENGINES – LOWER EMISSIONS, SAME GREAT PERFORMANCE

Develon ADTs use only proven, reliable and powerful diesel Scania engines with excellent torque, which achieve low fuel consumption and fulfill Stage V European regulation requirements.

NEW SELF-LEVELING HYDRO-GAS FRONT SUSPENSION

The DA30's design was based on the successful and proven design of the DA45. It has been upgraded with the self-leveling system for better shock absorption in changing operating conditions.

PAYLOAD METER

Powerful hydraulic retarder keeps machine's speed constant on downhills without support of service brakes. Operator can easily adjust the retarder's power by lever or simply pushing the gas pedal.

TRANSPORTABILITY

Thanks to its less than 3-meter width, the DA30 can be moved easily from one site to another. And thanks to the compact design of both machines, a shorter low loader can be used.

FORWARD-MOUNTED TURNING RING

The turning ring is located in front of the articulation point, ensuring equal weight distribution to the front wheels in all operating situations, including maximum turning. The equal weight distribution enables you to use the limited slip differentials with only 45% locking value – ensuring drive to both front wheels in all situations, without completely locking the wheels.

TRACTION

The Develon ADT's unique design offers permanent 6-wheel drive, ensuring stability and equal weight distribution to accommodate all job applications. The Develon ADTs superior driveline ensures maximum traction and durability.









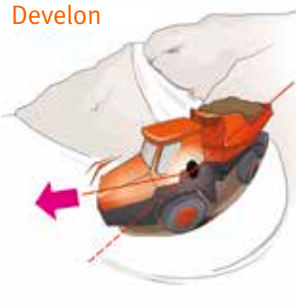





Design simplicity: Permanent 6-wheel drive, together with the ground-following rear tandem and our special front-mounted turning ring, provide equal power & weight distribution and excellent operating performance. The sloping rear frame provides a lower centre of gravity - improving the ADT's overall stability, and ensuring fast and easy tipping of the body for increased productivity.







Sliding window and hand grip



Retarder control lever



Safety hand rails
all around the cab

OPERATE IN COMFORT

QUIETEST TRUCK IN THE INDUSTRY

The spacious ROPS/FOPS cab is equipped with climate control and a high-quality operator seat with air suspension to provide excellent comfort. Precise steering, good visibility, low noise levels (72 dB(A), ISO6395) and optional vertical movement provide additional comfort and quiet.

- The sloping hood gives the operator an excellent view
- The cab is mounted on a special rubber suspension to reduce vibration and conduction of noise into the cab

BEST-IN-CLASS OPERATOR ENVIRONMENT

The new DA30 cab was designed based on the feedback received directly from hundreds of Develon operators. This resulted in upgrade of the cab in features and functions required by the market, including: hand grip on the right side, foot rest, improved storage room, USB charger, Bluetooth radio, all around rails outside the cab, additional lever for retarder control and a number of other new features.

HIGH-COMFORT AIR-SUSPENSION SEAT

Because a highly comfortable seat means a lot to every operator, we provide an air-suspension seat with armrest as standard.

ONE KEY SOLUTION

To enter and safely operate your Develon ADT, you need just 1 key to lock and unlock all the doors and also start the engine.

SELF-LEVELING, HYDRO-GAS FRONT SUSPENSION

New suspension system has outstanding performance in rough terrain due to big shock absorption capacity of the hydraulic suspension cylinders. On top of that, the self-leveling system can adjust to match changing working conditions.

STORAGE COMPARTMENTS WITH EXTRA 12 V POWER SUPPLY

Plenty of storage spaces, plus extra room designed to fit cool/hot box with additional 12V power supply.

MP3, DAB AND BLUETOOTH

Standard radio supports all modern features like MP3, DAB and Bluetooth.

CLIMATE CONTROL

Our specially designed climate control is easy to operate and highly efficient – keeping you comfortable at all times.











OPERATE AT EASE IN YOUR COMFORT ZONE

The Develon ADT is one of the industry's simplest trucks to operate and, at the same, time offers a large number of functions. Comfortably seated in this class-leading operator cab, you'll enjoy easy operation combined with excellent efficiency. And thanks to the upgraded monitor panel, you'll operate in your comfort zone.

TOTAL CONTROL IN ALL SIMPLICITY

OPERATE AT EASE IN YOUR COMFORT ZONE

- Bigger indications
- Multiple languages
- Integrated payload meter (as standard)
- Diagnostic section with transmission and hydraulic oil level check function
- Gradient meter indication for increased safety while operating
- Integrated rear-view camera

LCD COLOR MONITOR PANEL

- 7” color display, resolution 800 x 480 pixels
- Shows all necessary information for driving and handling the machine
- Rear-view camera image embedded in instrumentation graphics
- Backlight dimming according to ambient light conditions
- Sub-menus for additional and diagnostic functions

TOUCH PAD

- Diesel fuel heater ON/OFF
- Longitudinal differential lock
- Override button
- Cab roof and mirror arm front lights ON/OFF
- Rotating beacon ON/OFF (optional)
- Operating work-lights ON/OFF

DIFFERENTIAL ACTIVATION

With automatic limited slip differentials, automatic and manual transmission shift, power steering, "simple touchpad" and "easy to read" display, every ADT is as simple to use & operate as possible.

BODY HOIST LEVER

The new body hoist lever is easy to operate and fingertip controlled. This electronically managed hoist lever incorporates a higher body up speed and an automatic body down feature, with soft touch down, to keep you safe at all times.

”TIP-TRONIC” GEAR SHIFT

To ensure the smoothest possible gear shifts and momentum, you can run the truck in both automatic and manual gears.

RETARDER FORCE MODULATION LEVER

New lever located on the right-hand side below the steering wheel enables operator to choose from 4 power modes. On top of that, the gas pedal is responsible for retarder power reduction.



All-round visibility





Body hoist lever with boost button



SIMPLE MAINTENANCE WITH GREAT UPTIME

ACCESS MAIN FILLING POINTS WHILE STANDING ON THE GROUND

Improved simplicity of maintenance and service reduces failure rate and improves lifetime and longevity.
Convenient position of liquids' levels check and filling points, easy access to filters and very low number of rubber wearing components significantly reduce labor time.



- Easy access to factory-fitted standard automatic central lubrication system
- Dedicated space for grease cartridge and grease gun
- Easy access to filters



- Diesel and AdBlue filling points accessible from the ground level
- Diesel tank prepared for fast fill coupler



- LED light indicates when power isolator can be switched off
- Power isolator in convenient and safe location
- External power supply

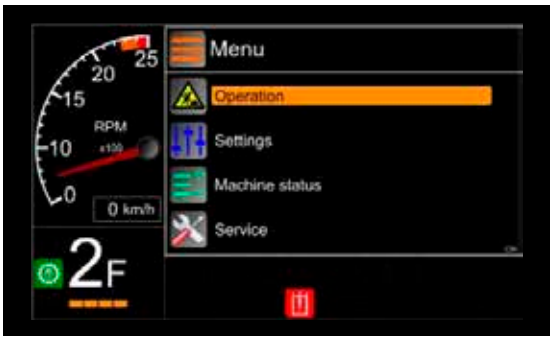

- Multifunctional display with available service/ maintenance functions
- Transmission oil level check
- Status of hydraulic and electronic components

TRAINING CENTER

Located in the heart of Europe, near Prague (Czech Republic), the Develon Academy is a dynamic center of knowledge where Product, Service and Develon University training courses are held.

The facilities include a modern building that can accommodate all of the product ranges, and an outdoor training area where we conduct field exercises and product testing with the fleet of Develon machines and attachments.

FILTERS

All filters are centralized for quicker and easier accessibility.

GLOBAL DEVELON NETWORK

With a network of Develon Dealers & Parts Distribution Centers worldwide, your Develon trucks can be serviced & maintained wherever you are.

TELEMATICS

The Develon Connect system is available for reading out vehicle operating & production parameters remotely, and providing you with total ease-of-mind. Keep day-by-day overview on the machine's productivity, status and condition.



DEVELON FLEET MANAGEMENT

JOB SITE MANAGEMENT

WORK EFFICIENCY MANAGEMENT

PREVENTIVE MAINTENANCE

PROACTIVE SERVICE

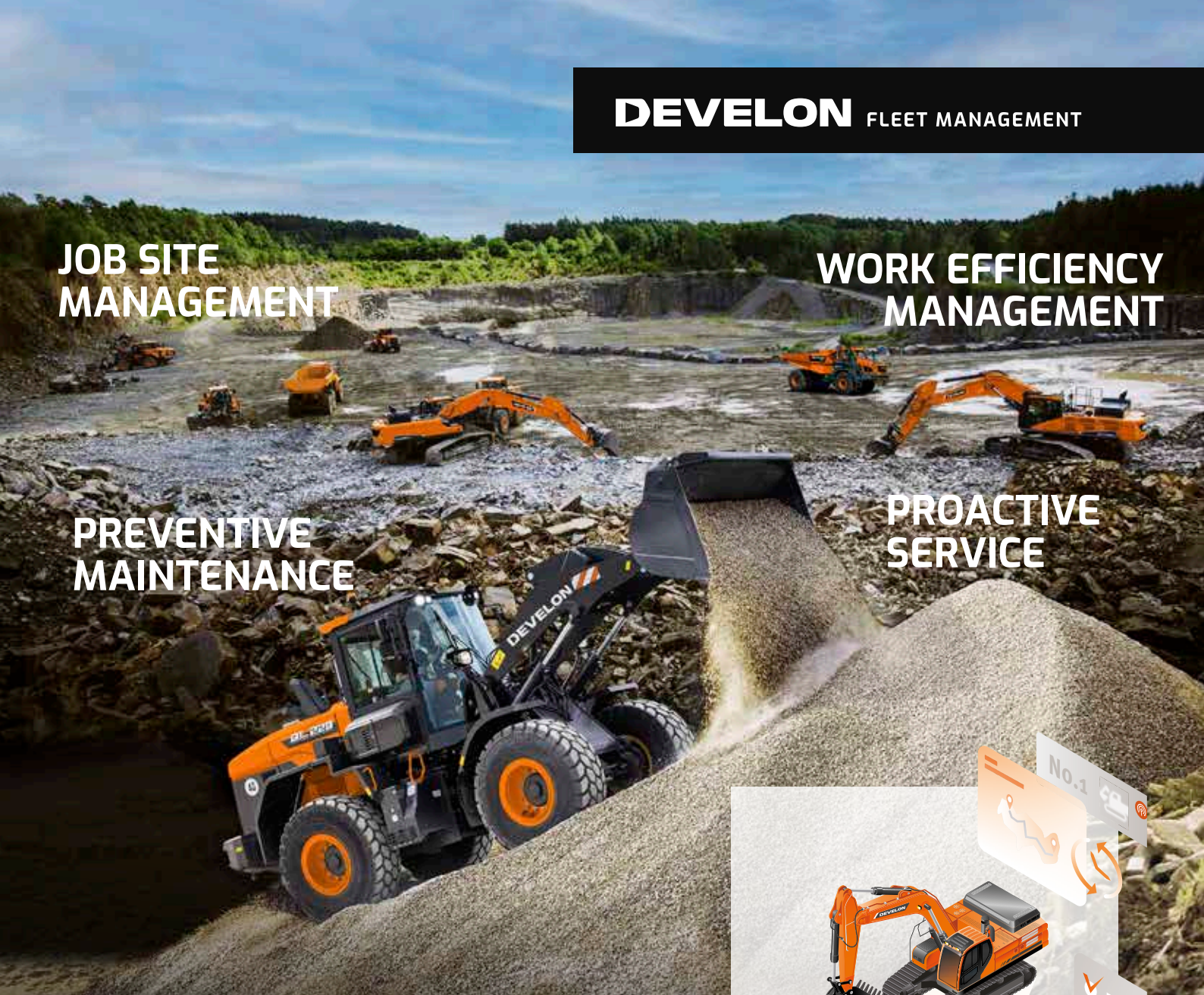

OPERATION TREND
Total operation hours and operation hours by mode

FUEL EFFICIENCY*
Fuel level and fuel consumption

LOCATION
GPS and geo-fence

REPORTS
Operation report & utilization

WARNING & ALERT
Detect machine warnings, antenna disconnection, and geo/time fence

FILTER & OIL MANAGEMENT
Preventive maintenance by item replacement cycle



TELEMATICS TERMINAL
Terminal device is installed and connected to a machine to capture machine data.

TELECOMMUNICATION
Develon provides dual-mode (Mobile, Satellite) communication to maximize communication coverage.

DEVELON FLEET MANAGEMENT WEB
Users can monitor machine status from Develon Fleet Management Web.

*Functions may not be applied to all models. Please contact your sales representative for more information on this feature.

TECHNICAL SPECIFICATIONS

ENGINE

The Scania DC diesel engine fully meets the latest Stage V emission regulations. Water-Cooled engine with turbo charger and air-to-air intercooler.

	DA30	DA45
Model	Scania DC 9	Scania DC 13
No. of cylinders	5 (in line)	6 (in line)
Rated power at 2100 rpm (ISO 3046)	375 HP (276 kW)	500 hp (368 kW)
Rated power at 2100 rpm (ISO 14396)	362 HP (270 kW)	483 hp (360 kW)
Max. torque at 1300 rpm	1873 Nm	2373 Nm
Bore × stroke	130 × 140 mm	130 × 160 mm
Starter	8 HP (6 kW)	
Batteries – Alternator	2 × 12V 140Ah – 24V 100A	
Air filter	Dry type	

WEIGHTS

	DA30	DA45
Empty: Front axle	12500 kg	14500 kg
Empty: Rear axle	10600 kg	16000 kg
Max. admissable axle load: Front axle	16700 kg	22500 kg
Max. admissable axle load: Rear axle	37000 kg	55000 kg
Max. admissable weight	51500 kg	71500 kg
Payload	28 t	41 t
Net weight	23100 kg	30500 kg

Note: All weights include a full fuel tank and operator.

GROUND PRESSURE

	DA30	DA45
Empty: Front axle	121.7 kPa	93.9 kPa
Empty: Rear axle	51.6 kPa	51.8 kPa
Loaded: Front axle	161.6 kPa	139.2 kPa
Loaded: Rear axle	169.8 kPa	161.3 kPa

BODY

	DA30	DA45
Body capacity (without tailgate)	16.8 m³	24.4 m³
Material	Hardened abrasion-resistant steel plates (400 HB)	
Tilt cylinders	Single stage, double-acting	
Tipping time	Up: 12 sec. / Down: 10 sec.	
Body	Designed for exhaust heating	
Sloping frame	Down from the hinge point	

SPEEDS

	DA30	DA45
Forward 1 – 2 – 3 – 4 – 5 – 6 – 7 – 8	6 - 8 - 11 - 16 - 23 - 32 - 45 - 55 km/h	5 - 8 - 11 - 16 - 23 - 32 - 45 - 55 km/h
Rear 1 – 2 – 3 – 4	6 - 8 - 11 - 16 km/h	5 - 8 - 11 - 16 km/h

TRANSMISSION

Electronically-controlled automatic transmission with retarder. The torque converter has automatic lock-up in all gears.

	DA30	DA45
Type	ZF 8 EP320	ZF 8 EP420

POWER TO WEIGHT RATIO

	DA30	DA45
Empty	11.9 kW/t	11.8 kW/t
Loaded	5.4 kW/t	5.0 kW/t

FLUID CAPACITIES

	DA30	DA45
Fuel tank	360 l	500 l
Hydraulic system	75 l	85 l
Adblue tank	70 l	70 l
Hub front	11 l	9.6 l
Tandem housing, rear differential and hubs	145.3 l	228 l
Cooling circuit	35 l	35 l
Engine	35 l	45 l

HYDRAULIC SYSTEM

1 variable displacement piston pump for steering & tipping and for cooling fan, brakes & auxiliaries

305 l/min @ 2100 rpm

Main safety valves pressures / circuit

280 / 210 bar

Filtration

One return flow filter

TIRES

	DA30	DA45
Standard	23.5 R25 two star radial	29.5 R25 two star radial

DA30

Unit: mm

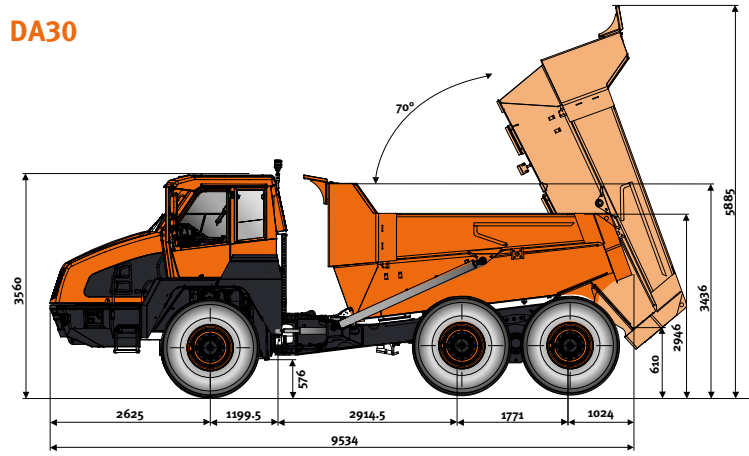

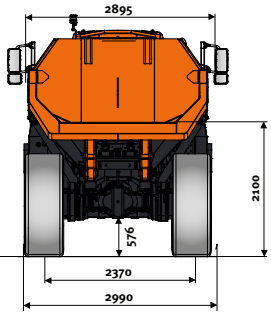

DA30 width with 750/65 R25 tyres: 3208 mm

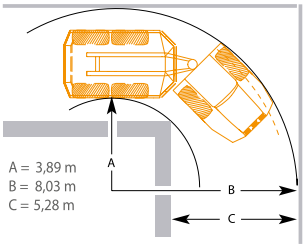

Turning radius according to ISO 7457: 7.68 m

DA45

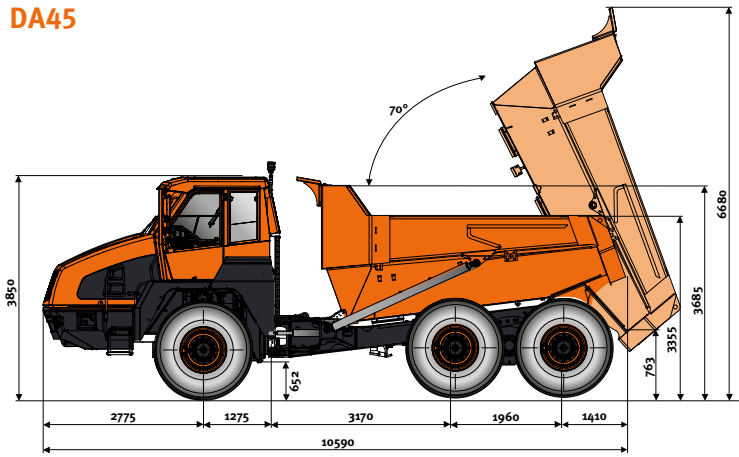

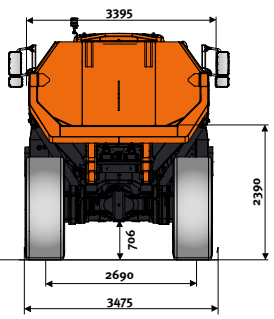

DA45 width with 875/65 R29 tyres: 3630 mm

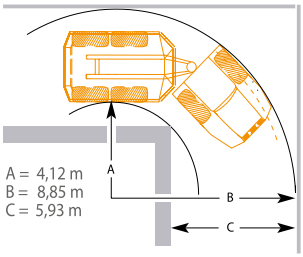

Turning radius according to ISO 7457: 8.42 m

SPECIAL FEATURES

Suspension
- Front: Semi-independent, self-leveling hydro-gas suspension
- Rear: Free-swinging tandem housing

Articulation hinge and steering
- Articulation hinge with forward-mounted turning ring
- Steering cylinders (2): Double-acting
- The steering is approved according to ISO 5010
- Max. steering angle: 45°
- Ground-driven emergency steering pump

Driveline
- Full-time 6 × 6 drive with 2 transverse differentials and one longitudinal
- Front axle transverse differential: Limited-slip diff lock with 45% locking ratio
- Rear axle transverse differential: Limited-slip diff lock with 45% locking ratio
- Inter-axle longitudinal differential:
  - Torque-proportioning differential, integrated into the ZF transmission
  - Torque distribution:
    - 1/3 to the front axle
    - 2/3 to the rear axle
    - 100 % lockable
- Tandem housing: Gear driven, free-swinging.
  Provides equal drive to rear wheels and ensures the best possible ground contact – whatever the ground conditions

Brake system
- Dual circuit braking system
- Approved according to ISO 3450
- All hydraulic-operated brakes with enclosed oil-cooled wet multiple discs on four hubs (braking force distributed to two hubs by tandem gear wheels)
- Spring actuated hydraulic released parking brake, mounted on driveline shaft
- Max. gradient, parking brake: 15°
- Automatic transmission retarder as standard

Cab
- Approved to ROPS/FOPS standards (ISO 3471, ISO 3449)
- Low interior sound level: 72 dB(A) (ISO 6395)
- External sound level: 108 dB(A) (ISO 6396)
- The cab is centrally located on rubber mountings
- Hand and arm vibrations are less than 2.5 ms^2 (ISO 5349-2)
- Whole body vibration is less than 0.5 ms^2 according to ISO 2631-1
- Superior visibility - for safer operation
- Superior operating controls location
- Adjustable suspended operator seat
- Adjustable steering column
- Climate control – Heater and air conditioning
- Tilting for service access
- All-around hand rails



STANDARD AND OPTIONAL EQUIPMENT

● Standard ○ Optional

Engine

- ● Scania, Stage V compliant, SCR, DPF, water-cooled, diesel engine with VGT turbo charger and air-to-air intercooler

Hydraulic system

- ● 1 variable displacement piston pump for steering & tipping
- ● One return flow filter

Cab & interior

- ● Armrest at operator seat
- ● Headrest at operator seat
- ● Safety belt at operator and instructor seat
- ● Adjustable steering column
- ● All instrumentation in LCD display
- ● Cigarette lighter
- ● 12V and USB charging point
- ● Retractable roller sunblind
- ● Tinted safety glass
- ● Sliding window (left & right side)
- ● Windshield wiper and washer
- ● Side mirrors
- ● Protection for rear window
- ● Emergency steering, ground-driven
- ● Radio/MP3 and Bluetooth
- ● Cab tilting system
- ● Emergency shutdown switch
- ● Anti-slip steps & platform
- ● Cool box compartment
- ● Storage space
- ● Electronic climate control
- ● High-comfort seat (vertical and longitudinal suspension)
- ● Heated operator seat
- ● Heated mirror
- ● Electrically adjustable mirrors

Safety

- ● Gradient meter with anti-flip-over protection system
- ● Payload meter & cycle counter
- ● Wet disc brake
- ● Rear-view camera
- ● Hammer for emergency escape
- ● Hand rails on the fenders
- ○ Seat belt green warning light
- ○ Blue or orange flashing reverse light
- ○ White noise alarm

Other

- ● Transmission retarder brake
- ● Automatic lubrication system
- ● DEVELON Fleet Management Web (telematic system)
- ● Mud flaps
- ● Towing hook, front and rear
- ● Work light kit (rear and front)
- ○ Webasto heating system (heat up the cooling system)
- ○ Electrical engine heater
- ○ Tail gate
- ○ Fire extinguisher
- ○ First aid kit
- ○ Beacon
- ○ Light bar
- ○ Speed limitation
- ○ Work light kit (rear and front) LED
- ○ Tool kit
- ○ Warning triangle
- ○ Fast fill
- ○ Tire pressure monitoring system (may not be available with all tires)
- ○ Electric diesel refueling pump

Undercarriage

- ○ Quarry
- ○ Earthmoving
- ○ Flotation tires

Some of these options may be standard in some markets. Some of these options may not be available for certain markets. Please check with your local DEVELON dealer for more information about availability or to adapt your machine to your application needs.



Tail gate



LED lights



Quarry tires



High flotation tires


DEVELON


DEVELON
DA 45

Powered by **Innovation**

DISCOVER MORE:

DA30

DA45

DEVELON

HD Hyundai Infracore Europe s.r.o.
IBC - Pobřežní 620/3, 186 00 Praha 8-Karlín
Czech Republic

©2023 DEVELON D4600521-EN (06-23)

Certain specification(s) are based on engineering calculations and are not actual measurements. Specification(s) are provided for comparison purposes only and are subject to change without notice.
Specification(s) for your individual Develon equipment will vary based on normal variations in design, manufacturing, operating conditions, and other factors. Pictures of Develon units may show other than standard equipment.